Concord Department of Fire & Life Safety

Fire Prevention Bureau

Fire Protection Development Standards

Telephone: 704-920-5517

Fax: 704-920-6936

May 25, 2012

This Page Left Intentionally Blank

VERIFICATION OF ACKNOWLEDGEMENT

I, _____, with

_____

hereby acknowledges that I have received the Concord Department of Fire & Life Safety Fire Protection Development Standards Manual and will read its entirety.

Furthermore, if I should have questions or comments regarding any construction terminology and/or clarification, I will contact the Fire Marshal's Office at (704) 920-5517.

_____ _____

Signature Date

_____

Title

This Page Left Intentionally Blank

Preface

The Concord Department of Fire and Life Safety Fire Protection Development Standards utilizes the North Carolina Building Code as the basis for application of these standards. All references included herein reference the 2012 International Building Codes with North Carolina Building Code Council Amendments.

Additional requirements included in this document are references to City of Concord Ordinances and Unified Development Ordinances.

These are minimum fire protection standards only and are not to be construed as complying with the other regulations of other departments of the City of Concord. The omission of any code requirement not listed in this document does not excuse the requirement.

Table of Contents

Chapter 1 - Construction Plan Submittal & Contractors License ---------- 1

Section 1.1 - Contractors License Requirement ---------- 1

Chapter 2 - Site Plan Submittal Requirements ---------- 2

Section 2.1 - Fire Department Site Access Requirements ---------- 3

Section 2.2 - Fire Hydrant Installation and Specifications ---------- 8

Section 2.3 - Fire Department Hose Connections ----------12

Section 2.4 Confirmation of Acknowledgement and Acceptance ---------- 14

Chapter 3 - Building Plan Submittal Requirements ---------- 16

Section 3.1 - Fire Alarm Submittal Requirements ---------- 18

Section 3.2 - Fire Sprinkler/Standpipe System Plan Submittal Requirements - 18

Section 3.3 - Installation of Electric Fire Pumps ---------- 19

Section 3.4 - Fire Suppression System Plan Submittal Requirements ---------- 19

Chapter 4 - High-Rise Plan Review and Submittal Requirements ---------- 20

Chapter 5 - Mechanical Smoke Control System Plan Submittal Requirements ---- 26

Chapter 6 - Area of Rescue Assistance ---------- 28

Table of Contents (Continued)

Chapter 7 - Occupancy Use Change – Permit Requirements ---------- 29

Chapter 8 - Required Fire Inspections For New Construction & Upfit Projects ----- 31

Section 8.1 - Temporary Power Requirements ---------- 32

Section 8.2 - Underground Fire Line and FDC Inspection & Flush ---------- 36

Section 8.3 - Rough Fire Sprinkler Piping Inspection ---------- 38

Section 8.4 - Final Fire Sprinkler Fire Inspection ---------- 39

Section 8.5 - Rough Standpipe Piping Inspection ---------- 40

Section 8.6 - Final Standpipe Inspection ---------- 41

Section 8.7 - Rough Fire Alarm Inspection ---------- 42

Section 8.8 - Final Fire Alarm ---------- 43

Section 8.9 - Kitchen Hood Suppression System Inspection ---------- 44

Section 8.10 - Final Fire Building & Site Inspection ---------- 45

Chapter 9 - Fire Lane Ordinance ---------- 47

Chapter 10 - Gated Community Gate Inspection ---------- 51

Chapter 11 - Fire Protection Equipment & Room Identification Signs ---------- 52

Section 11.1 - Fire Department Sign Templates ---------- 55

Chapter 12 - Knox Box Program ---------- 59

Chapter 13 - Department of Fire and Life Safety Fee Schedule ---------- 61

Chapter 14 - City Of Concord Standards ----------62

Appendix A - City of Concord/Cabarrus County Permit Submittal Process Matrix - 64

Appendix B - Concord FPD Permit Applications ---------- 66

Appendix C - NCOSFM 2012 IBC Appendix B Example ---------- 72

Appendix D - CFD Turning Radius Templates ———————————— 81

Appendix E—Water Resources Backflow/Cross Contamination Manual ----------91

Concord NORTH CAROLINA FIRE AND LIFE SAFETY

Chapter 1 - Construction Plan Submittal and Review

Plans review and inspections are conducted through the Fire Prevention Division of the Concord Department of Fire & Life Safety. The Plan Reviewers office is located at the City Hall Annex Building, 66 Union Street South, Concord, NC, 28025.

All submittals must include a Certificate of Compliance (COC) Application from the City of Concord Development Services Department. A copy of the application can be obtained by contacting this office at 704-920-5152.

Fire Detection/Protection Equipment submittals shall include at least one (1) complete set of documents. Parties desiring a signed set of documents with comments approved by the Fire Department shall submit a least two (2) sets of documents at the time of submittal along with a full-size, self-stamped addressed envelope. The second set of plans will be stamped “Approved” and returned to the applicant. A complete set of documents including comments shall be available on-site at all times during installation. Submittals for New and Up-fit Construction shall be made in accordance with the City of Concord Developmental Services Policies and Guidelines.

Fire detection/protection equipment and associated systems shall be a separate plan submittal and permit fee from Site and Building Plan submittals. Permits shall be issued for each individual plan submittal with all subsequent inspections and test being conducted accordingly.

Plans approved by the Concord Department of Fire & Life Safety give permission for installation of the fire protection system. Installation shall not begin without a permit. Final approvals are subject to field inspections. Any approval issued by the Fire Prevention Division does not release the contractor or property owner from the responsibility of full compliance with applicable codes.

All installations shall be in accordance with the approved plans. Any deviations from the plans should be discussed with the Plan Reviewer for your project prior to making changes. Some changes will require a re-submittal to the Fire Prevention Division for re-approval.

Section 1.1 - Contractors License Required:

When the General Statutes require that general construction, plumbing, mechanical, electrical, fire protection, or gas work be performed by an appropriately licensed individual. No permits for such work shall be issued to an unlicensed person or firm (Chapter 3, Section 301.6 – North Carolina Administrative and Enforcement Code).

Chapter 2 - Site Plan Submittal Requirements:

Site Plan documents for new construction shall be submitted for review and approval prior to site preparation work beginning. Design, Construction and installation shall be in accordance with the appropriate City of Concord Ordinances, North Carolina Fire Prevention Code requirements and applicable NFPA Standards.

Site plan documents for construction projects shall contain the following information:

1. Fire lane locations and pavement marking specifications,
2. Fire hydrant locations with associated water lines,
3. Fire department connection locations and "FDC" sign specifications,
4. Turning radius drawings and pavement driving lane markings,
5. Landscaping details including overhanging trees and shrubbery,
6. Building overhangs and drive-through locations and height clearances,
7. Building entrance and exit locations,
8. The anticipated fire flow requirements for the building,
9. The intended use of the building including secondary uses,
10. A NFPA 241 letter shall be submitted at the time of plan submittal,
11. Drawings shall be scaled,
12. Any other items requiring fire department consideration.

See the following sections for additional information pertaining to Site Plan Requirements:

1. Section 2.1- Fire Department Site Access Requirements
   a. Section 2.1.1 - Cul-de-sac Streets

2. Section 2.2 - Fire Hydrants
   a. Section 2.2.1 Fire Service Water Main Size Requirements

3. Section 2.3 Conformation of Acknowledgement and Acceptance

Section 2.1 - Fire Department Site Access

The purpose of fire protection access is to allow emergency vehicles to approach a building as close as practical in order to deploy hose, ladders and other fire suppression/rescue equipment necessary for fire control, EMS and rescue operations.

Emergency Vehicle Access
The purpose of this Section is to ensure that all premises shall be readily accessible for emergency service vehicles, particularly fire-fighting equipment.

Emergency Access Required. For developments which do not have frontage on a public street, access for fire vehicles and emergency apparatus from a public street shall be provided as follows:

Except as provided by this section, a fire lane shall be required to provide access to any portion of any structure which is more than:

- one hundred and fifty (150) feet from the nearest street right-of-way when the structure is thirty (30) feet or less in height; or

- fifty (50) feet from the nearest street right-of-way when the structure exceeds thirty (30) feet in height.

When fire vehicles and emergency apparatus are provided access to any portion of a structure more than the distance from a street right-of-way specified in above, by means of either buffer yard area or adjoining property, the requirements of this section may be waived by the Administrator, after consultation with the fire chief.

The City shall not be liable for damage to underground utilities beneath fire access lanes/roads caused by fire fighting equipment.

Exceptions. Requests for exceptions or relief from any provisions of this section shall be requested in writing and be submitted to the Fire Prevention Division for review and approval.

Access to buildings shall also be designed in accordance with Section 503 of the North Carolina Fire Prevention Code and the City of Concord Technical Standards Manual.

(North Carolina Fire Code Section 503 on following page)

North Carolina Fire Code (2012)

Section 503 Fire Apparatus Access Roads

503.1 Where required.
Fire apparatus access roads shall be provided and maintained in accordance with Sections 503.1.1 through 503.1.3.

503.1.1 Buildings and facilities.
Approved fire apparatus access roads shall be provided for every facility, building or portion of a building hereafter constructed or moved into or within the jurisdiction. The fire apparatus access road shall comply with the requirements of this section and shall extend to within 150 feet (45 720 mm) of all portions of the facility or all portions of the exterior wall of the first story of the building as measured by an approved route around the exterior of the building or facility.
Exception:
The code official is authorized to increase the dimension of 150 feet (45 720 mm) where:
1.The building is equipped throughout with an approved automatic sprinkler system installed in accordance with Section 903.3.1.1, 903.3.1.2 or 903.3.1.3.
2.Fire apparatus access roads cannot be installed due to location on property, topography, waterways, non-negotiable grades or other similar conditions, and an approved alternative means of fire protection is provided.
3.There are not more than two Group R-3 or Group U occupancies.

503.1.2 Additional access.
The code official is authorized to require more than one fire apparatus access road based on the potential for impairment of a single road by vehicle congestion, condition of terrain, climatic conditions or other factors that could limit access.

503.1.3 High-piled storage.
Fire department vehicle access to buildings used for high-piled combustible storage shall comply with the applicable provisions of Chapter 23.

503.2 Specifications.
Fire apparatus access roads shall be installed and arranged in accordance with Sections 503.2.1 through 503.2.7.

503.2.1 Dimensions.
Fire apparatus access roads shall have an unobstructed width of not less than 20 feet (6096 mm), except for approved security gates in accordance with Section 503.6, and an unobstructed vertical clearance of not less than 13 feet 6 inches (4115 mm).

503.2.2 Authority.
The code official shall have the authority to require an increase in the minimum access widths where they are inadequate for fire or rescue operations.

503.2.3 Surface.
Fire apparatus access roads shall be designed and maintained to support the imposed loads of fire apparatus and shall be surfaced so as to provide all-weather driving capabilities.

503.2.4 Turning radius.
The required turning radius of a fire apparatus access road shall be determined by the code official. Turning Radius shall be designed and installed as per the following Department of Fire and Life Safety specifications:

- Inside to Inside = 24' 5"
- Curb to Curb = 40' 2"
- Wall to Wall = 47' 7"

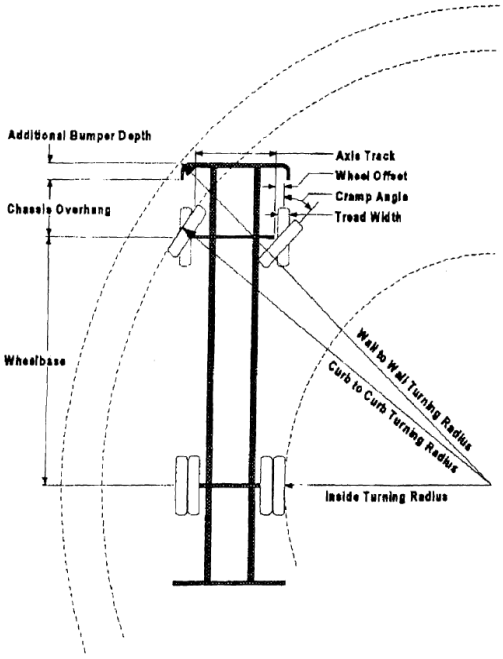

503.2.5 Dead ends.
Dead-end fire apparatus access roads in excess of 150 feet (45 720 mm) in length shall be provided with an approved area for turning around fire apparatus.

503.2.6 Bridges and elevated surfaces.
Where a bridge or an elevated surface is part of a fire apparatus access road, the bridge shall be constructed and maintained in accordance with AASHTO Standard Specification for Highway Bridges. Bridges and elevated surfaces shall be designed for a live load sufficient to carry the imposed loads of fire apparatus. Vehicle load limits shall be posted at both entrances to bridges when required by the code official. Where elevated surfaces designed for emergency vehicle use are adjacent to surfaces which are not designed for such use, approved barriers, approved signs or both shall be installed and maintained when required by the code official.

503.2.7 Grade.
The grade of the fire apparatus access road shall be within the limits established by the code official based on the fire department's apparatus.

Dead-End Fire Apparatus Access Road Turnarounds shall be installed as per North Carolina Fire Code Appendix D—Figure D103.1 and shall be approved by the Code Official.

503.2.8 Angles of approach and departure. The angles of approach and departure for fire apparatus access roads shall be within the limits established by the Fire Code Official based on the fire department's apparatus.

> *Fire access roads shall not exceed 6% in grade. The maximum Angle of approach shall not exceed 8 degrees and 87.75 inches. The maximum Angle of departure shall not exceed 8 degrees and 130 inches*

Section 2.1.1 - Cul-de-sac Streets

The following requirements are derived from the City of Concord Technical Standards Manual Article II, Chapter 4, Section 4.1 concerning the construction of Cu-de-sac Streets:

4.1. **Design Standard Exceptions.** Cul-de-sacs are subject to the same design guidelines as those given for the local street classification, with the exception of the following design standards that are specific to cul-de-sacs.

1. *Service Limits.* A cul-de-sac can serve no more than twenty (20) residential units.
2. *Lengths.* Cul-de-sacs must not exceed the lengths provided in Table 4-1. Length is measured from the center of the terminus to the centerline of the closest intersecting street providing access to the cul-de-sac.
3. *Connectivity Provisions.* If the cul-de-sac is located along a corridor included in the City of Concord's Transportation Plan or if the cul-de-sac is located along a corridor that will serve as a future thru street in accordance with a recorded subdivision plat or site plan, preliminary and final engineering plans must show a stub (extension of the street right-of-way) from the terminus of the cul-de-sac to the edge of the area being developed. The stub must be duly signed in the field as to the potential for future extension.
4. *Termini.* The terminus of the cul-de-sac must be designed to allow vehicles to turn around and exit to the adjoining street.

   Radii. The radius for the terminus (bulb or turnaround) must not be less than forty (40) feet to the face of curb as shown on the detail drawings.

   Islands. An island may be located in the center of the terminus of the cul-desac. Islands must meet the design standards provided in Section 7.6.

Table 4-1: Maximum Lengths for Cul-de-Sacs.

Zoning District	Maximum Length (feet)
AG	1,000
B-1	500
C-1	500
C-2	500
CC	300
CD	1,500
I-1	1,500
I-2	1,500
O-I	500
PUD	500
RC	300
RE	1,000
RL	1,000
RM-1	800
RM-2	800
RU	300
RV	800

The complete City of Concord Technical Standards Manual can be accessed online at http://www.ci.concord.nc.us/devserve/tech_stand_0.asp

In situations where the above criteria do not adequately allow for fire department access and operations, the requirements set forth in Appendix D (Fire Apparatus Access Roads) and Figure D103.1 of the North Carolina Fire Prevention Code (NCFPC) may be implemented by the Fire Official (Page 7).

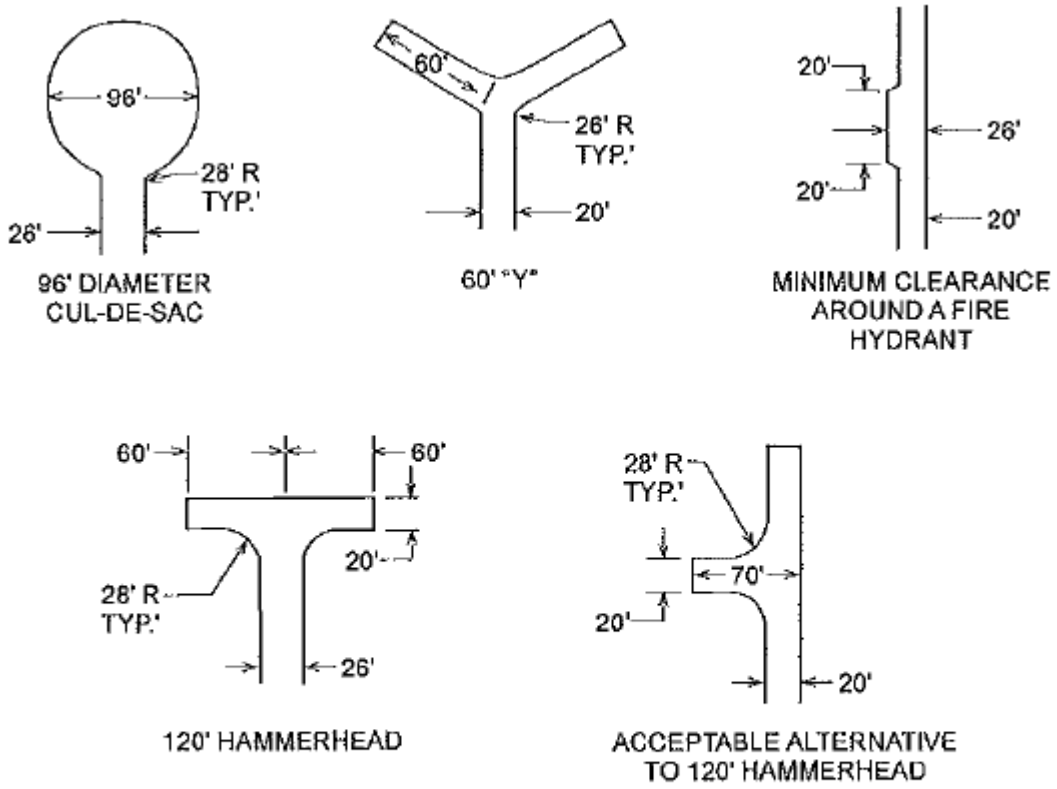

FIGURE D103.1
DEAD-END FIRE APPARATUS ACCESS ROAD TURNAROUND

Section 2.2 - Fire Hydrants

The deployment of fire hose directly affects the positioning of fire apparatus in proximity to a fire. The installation and distribution of fire hydrant is crucial in the suppression of fires, explosions or other emergencies requiring the application of water.

The following requirements supersede the requirements in City Ordinance 34-90.

Fire Hydrants

- Applicants shall install fire hydrants in accordance with Concord Regional Water Resources Department specifications and requirements.
- The Concord Regional Water Resources Department may contract with a developer to install fire hydrants required pursuant to Section 8-1, subsection (a), but in all cases, the full cost of providing for such hydrants shall be borne by the developer
- Any hydrant connected to the Concord Regional Water Resources Department's water system constructed pursuant to this subsection, shall constitute dedication to the Concord Regional Water Resources Department of such hydrant.
- All newly installed fire hydrants shall be 5-1/4 inch barrel hydrants. All foot valves shall be 5-1/4 inch in diameter. Only three-way hydrants shall be installed with 5-inch Stortz steamer connections. All hydrants shall be delivered with a primer coat. After hydrant installation, the primer shall be touched up and then painted with 2 coats of paint in accordance with the color codes specified on page 9 of this manual.
- For more information concerning this or any other water connection related issues please contact the Concord Regional Water Resources Engineering Department at 704-920-5425.

Hydrant Spacing. All newly installed fire hydrants shall be spaced at 1000 foot intervals in residential zoning districts, except as provided herein. In Commercial, Industrial and Multi-family construction developments, hydrants shall be spaced at 400 foot intervals. No application for development approval shall be approved for any building unless a hydrant is installed within 400 feet of the most remote area of the building. Structures with sprinkler systems shall provide fire hydrants within 200' of the Fire Department Connection. Mains shall be sized to provide 500 gpm exterior hose streams.

- Exceptions to Hydrant Spacing:
  1. For Group R-3 and Group U occupancies, the distance requirement shall be 600 feet (183 m).
  2. For buildings equipped throughout with an approved automatic sprinkler system installed in accordance with Section 903.3.1.1 or 903.3.1.2, the distance requirement shall be 600 feet (183 m).

Fire hydrants shall not be installed on water mains of less than six inches diameter or on water mains or water systems not designed to carry fire protection flows. Systems not designed for fire flows shall have the capacity to maintain a pressure of at least 30 pounds per square inch (gauge) throughout the system during peak flow.

Testing and Acceptance. All newly installed fire hydrants shall be tested by the Concord Fire Department, or the fire department in whose jurisdiction it is located (Testing may occur at the time of installation or after COC). The water authority shall notify the Concord Fire Department, upon completion of the system and its availability for testing. No construction shall be allowed in the protected area until the water system has been tested and approved unless otherwise allowed by the authority having jurisdiction. In phased construction or development, the minimum loops sizes, or applicable performance specifications required by these regulations, must be completed before construction of the structures can commence. The flows indicated as required for 1 and 2 story single family dwellings are based upon the minimum distance allowed from structure to structure. A greater amount may be required based upon the following spacing:

- More than 30 feet . . . 750 gpm @ 20 psi
- 30 - 13 feet . . . . . 1000 gpm @ 20 psi
- 12 - 0 feet . . . . . 1200 gpm @ 20 psi

Hydrant Specifications

All fire hydrants installed within the City of Concord shall be designed and installed as per Concord Regional Water Resources Department Standard Hydrant Detail specification. See next page for complete specification.

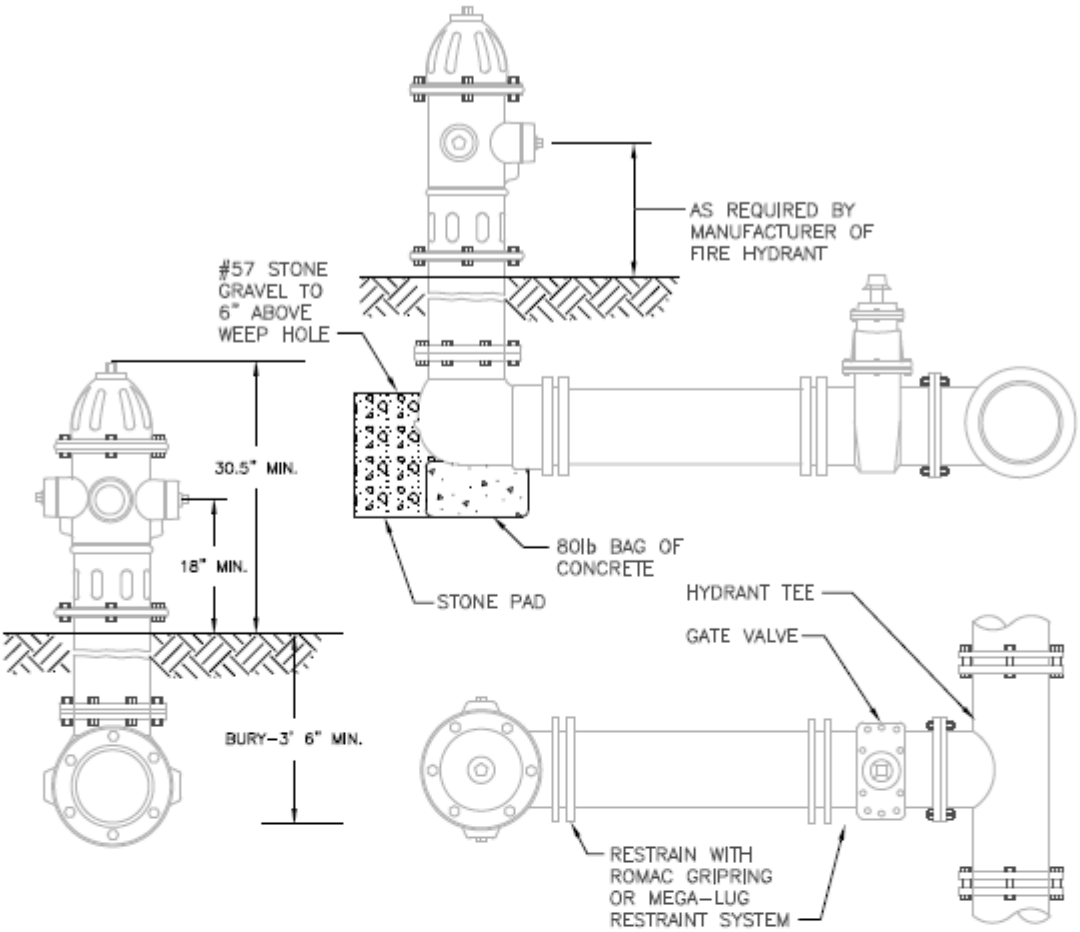

GENERAL NOTES:

1. HYDRANTS SHALL BE MUELLER COMPANY – MODEL: SUPER CENTURION 250; AMERICAN FLOW CONTROL – MODEL 5¼" B-84-B; CLOW VALVE COMPANY – MODEL: MEDALLION; OR EQUAL
2. HYDRANT SHALL HAVE INTEGRAL SNAP-TIGHT STYLE STORZ CONNECTION WITH 5¼" VALVE OPENING, OPEN LEFT, 1½" PENTAGON NUTS, TWO-2 ½" NST CONNECTIONS, ONE-5" STORZ CONNECTION, DRAIN HOLES OPEN, AND 6" MJ SHOE.
3. MINIMUM BURY DEPTH OF 3'-6".
4. ALL HYDRANTS SHALL STAND PLUMB. HYDRANTS WITH PUMPER NOZZLES SHALL HAVE HOSE NOZZLES PARALLEL WITH, AND THE PUMPER NOZZLE PERPENDICULAR TO, THE CURB LINE. ALL HYDRANTS SHALL BE ORIENTED SO THAT THE PUMPER NOZZLE FACES THE CURB OR AS DIRECTED BY THE CITY.
5. HYDRANT SHALL BE LOCATED AT LEAST 3' BEHIND THE CURB AND LESS THAN 10' FROM THE EDGE OF THE ROAD PAVEMENT OR AS DIRECTED BY THE CITY.
6. ALL OTHER MATERIALS AND INSTALLATION MUST CONFORM WITH THE TECHNICAL STANDARDS OF WSACC AND CITY OF CONCORD.

FIRE HYDRANT PAINT COLOR CODE REQUIREMENTS:

ALL NEW FIRE HYDRANTS INSTALLED IN THE CITY OF CONCORD SHALL BE PAINTED IN ACCORDANCE WITH THE FOLLOWING COLORS:

1. HYDRANTS ON PUBLIC WATER MAINS SHALL BE PAINTED SAFETY YELLOW, SHERWIN WILLIAMS SW4084 LRV 28% OR EQUAL.
2. PRIVATE HYDRANTS ON PRIVATE WATER MAINS SHALL BE PAINTED SAFETY RED, SHERWIN WILLIAMS SW4081 LVR 11% OR EQUAL.

FOR ALL FIELD PAINTING, ALL SURFACES SHALL BE SANDBLASTED AND PROPERLY PREPARED ACCORDING TO THE PAINT MANUFACTURER'S RECOMMENDATION PRIOR TO PAINTING. ALL FIRE HYDRANTS AND ANY PORTIONS OF THE HYDRANT ASSEMBLY EXPOSED TO VIEW (ABOVE ADJACENT GROUND ELEVATION) SHALL BE PAINTED WITH TWO (2) OR MORE EVENLY APPLIED COATS OF HYDRANT ENAMEL PAINT. HYDRANTS WILL BE RETOUCHED / REPAINTED AS NECESSARY AFTER INSTALLATION AND PRIOR TO ACCEPTANCE.

Concord NORTH CAROLINA

CITY OF CONCORD STANDARD DETAIL

FIRE HYDRANT

No.	Date	By	REVISION
1	3/31/10	SVM	PRIVATE HYDRANT COLOR REVISION

Drawn By:	Checked By:	Approved By:	Date	Sht	of
SVM	MSH		09/08		

Section 2.2.1 - Fire Service Water Main Size Requirements

Requirements in Residential Zoning Districts. The minimum size of fire service water mains in residential developments shall be 6 inches. All 6 inch mains must be looped. Dead end mains shall be 8 inches or greater.

> **Exceptions:** Mains installed may meet minimum performance specifications for the expected demand upon the system. Mains shall be designed to provide the following flow rates at 20 psi:
>
> - RE and RL zoning: 1,000 gpm
> - RM-1, RM-2, RV, and RC zoning: 1,500 gpm

Mains in residential subdivisions may be designed to provide 50% of the required flow in gpm if the homes are provided with an approved sprinkler system in compliance with NFPA 13D (2007). In any case, the flow shall not be designed to provide less than 500 gpm at 20 psi. Single family dwellings shall be provided with supply lines which will support the sprinkler system. Minimum service lines shall be 1-inch.

Requirements in Non-Residential Zoning Districts. The minimum size of fire service water mains in commercial and multi-family dwelling areas shall be 8 inches. All 8-inch mains shall be looped. Dead end mains shall be 12 inches. The minimum size of fire service water mains in industrial areas shall be 12 inches.

All 12-inch mains shall be looped. Dead end mains shall provide the minimum fire flow as required in this subsection. Notwithstanding the foregoing, mains installed may meet minimum performance specifications for the expected demand upon the system in lieu of the minimum size requirement.

Water mains shall be designed to provide the minimum fire-flows based upon the "Fire-Flow Requirements For Buildings" provisions of Appendix B of the North Carolina Fire Code. Flows shall be based upon Building Construction Type, Building Size and Flow Duration in hours as detailed in Table B105.1 of Appendix B.

Individual large structures with life safety hazards or extra hazardous operations shall, where required, by provided with on-site hydrants and water mains designed to provide the required fire flow as determined by the ISO formula and the Concord Fire Prevention Division.

In situations where the above criteria do not adequately allow for fire department access to fire hydrants, fire hydrant locations and distribution requirements set forth in Appendix C (Fire Hydrant Locations and Distribution) of the North Carolina Fire Prevention Code (NCFPC) may be implemented by the Fire Official.

Section 2.3 - Fire Department Hose Connections

Fire Department Hose Connections (FDC) for fire sprinkler and standpipes shall be installed where required, in accordance with NFPA 13 (2007), NFPA 14 (2007), NC Fire Code Section 912. Additionally, fire department connection specifications shall comply with the following:

1. Fire department hose connections shall be free standing and remote from the building. Connections shall be located a minimum distance remote from the building of at least the height of the exterior wall plus (10) ten feet, measured from the base of the wall towards the property line.

2. The connection shall be a (5) five inch Storz type connection with protective cap*. Device manufacturer specifications, piping size and materials shall be submitted for approval at the time plan review.

3. The connection shall be located to the curb cut of the main entrance of the project site or building it serves. The connection shall be arranged to face the street, driveway or fire access route. This location shall be placed in an area that will not interfere with access to the building when hoses are laid from the closest fire hydrant to the fire department connection.

4. The connection shall be located a minimum of (3) three feet behind the curb to protect the connection from vehicular damage. If the installation places the connection in an area where it may be subject to vehicular damage, the connection shall be protected in accordance with NCIFC Section 312. Requirements are as follows:
    a. Protective posts shall be (4) four inches in diameter or schedule 40 or better steel post set in thirty-six (36) inches deep in a concrete footing of not less than a (15) fifteen inch diameter. The inside of the post shall also be filled with concrete and set to a height to a least (36) thirty-six inches.
    b. Posts shall be located no closer than (36) thirty-six inches from the fire department connection and shall not interfere with the operation of the Storz connection.
    c. Posts shall extend above ground to a height at least equal to the top of the fire department hose connection.

    Maximum installation distances of fire department hose connections from fire department access roads shall be determined by the Fire Official.

5. The Storz connection shall be arranged so that the connection is between thirty (30) and thirty-six (36) inches above the finished grade, sidewalk or pit box top or lid at the location of the connection. Installations above (30) thirty inches above the finished grade shall be fitted with a (30) thirty degree down angle fitting.

The connection shall be located not more than two hundred (200) feet from the nearest fire hydrant. If the hydrant and FDC are located in close proximity, a minimum spacing of (3) three feet with a diagonal offset shall be maintained during the installation.

Immediate access to fire department hose connections shall be maintained at all times and without obstruction by fences, bushes, trees, walls or any other object for a minimum of (3) three feet.

8. Any exposed exterior piping for the connection not designed to resist corrosion due to weather exposure shall be painted red. The Storz connection and protective cap shall not be painted.

9. The connection shall be appropriately labeled with a metal “FDC” sign meeting the requirements of Section 11.1 of this manual**.

10. Paved access roads and parking lots adjacent to the fire department hose connection shall be designated as a “Fire Lane” and have pavement markings and Fire Lane Signs installed as per Section 9 of this manual.

11. Backflow prevention shall be installed as per City of Concord Water Resources Standards. See Appendix D of this manual for further information.

** In lieu of low system waterflow requirements or NFPA 13D/R systems a single, 2 1/2” inlet or a double, 2 1/2” inlet may be substituted at the discretion of the Fire Official.**

If the Fire Department Connection serves more than one building, a 12-inch by 18-inch red background sign with the addresses the Fire Department Connection serves in 3-inch white letters shall be posted in a location approved by the Fire Official.

Section 2.4 - Confirmation Of Acknowledgement & Acceptance

In order to ensure adequate fire protection is maintained during construction, the Department of Fire and Life Safety requires the submission of a CONFIRMATION OF ACKNOWLEDGEMENT AND ACCEPTANCE letter.

The purpose of this letter is to confirm that all interested and responsible parties involved in a construction project have been advised of the requirements of NFPA 241 and the International Fire Code Chapter 14 as relating to site access and water supply.

This shall include but not limited to:

1. Access roadways shall be installed prior to vertical construction.
2. All required fire hydrants shall be installed and approved prior to combustible materials arriving on site.
3. Any other site/project specific requirements as deemed necessary by the Code Official.

By the submission of this letter the contractor and other responsible parties agree to abide by any stop work order issued by this department if, the required access is not approved and maintained prior to and during construction and/or the required fire hydrants are not operable and approved prior to combustible construction on the site/ project.

Please see the following page for the Confirmation of Acknowledgment and Acceptance submittal form.

See following page:

CONCORD FIRE & LIFE SAFETY
CONFIRMATION OF ACKNOWLEDGEMENT AND ACCEPTANCE

We the undersigned have been advised of the requirements of NFPA241 and the International Fire Code Chapter 14 as relating to site access and water supply. All interested and responsible parties hereby agree to provide access roadways prior to vertical construction. All interested and responsible parties hereby agree to provide the required fire hydrants prior to combustible materials arriving on site. The contractor and other responsible parties agree to abide by any stop work order issued by this department if, the required access is not approved and maintained prior to and during construction and/or the required fire hydrants are not operable and approved prior to combustible construction on the site/project listed below.

Name of Project _____

Location of Project _____

Current Date _____

Contractor _____

Contractor's Address/Phone _____

Contractor's Signature _____

Owner _____

Owner's Address/Phone _____

Owner's Signature _____

Project Manager _____

Project Manager's Address/Phone _____

Project Manager's Signature _____

Notary Public _____

Notary Public (County) _____

Notary Public Commission Date Expiration _____

Notary Public Signature _____ Date _____

Concord Department of Fire & Life Safety
Attn: Fire Prevention
100 Warren C. Coleman Blvd.
Concord, NC 28027
704-920-5517
Fax 704-920-6936

Chapter 3 - Building Plan Submittal Requirements:

Construction documents for new and upfit construction shall be submitted for review and approval prior to work beginning. Construction, installation and testing shall be in accordance with the appropriate City of Concord Ordinances, North Carolina Building/ Fire Prevention Code requirements and NFPA Standards.

Building plan submittals shall contain the following information:

1. Building Floor Plan with an Appendix B;
2. Intended occupancy use classifications and secondary uses;
3. Building Elevations and Topography;
4. Fire rated assembly locations and specifications;
5. Fire separation locations and specifications;
6. Fire door locations and door specifications;
7. Hazardous Materials storage array locations and specifications;
8. Installation or Removal of Tanks for liquid motors fuels and LPG, LNG, CNG;
   a. The sizes and locations of tanks shall be indicated,
   b. Tank specifications shall be included.
9. High-piled combustible storage and rack storage array details;
   a. Plans shall include drawings, diagrams and specifications on Rack Storage arrangements.
10. Kitchen Hood Installation locations and specifications;
    a. See Fire Suppression System Plan Submittal Requirements.
11. Paint Spray Booths and Associated System locations and specifications;
    a. See Fire Suppression System Plan Submittal Requirements.
12. Flammable/Combustible Liquid Storage Rooms, Hazardous Materials Storage Rooms and Clean Room locations and specifications;
    a. Special Agent Protection Systems - See Fire Suppression System Plan Submittal Requirements.
13. Compressed Gas or Medical Gas System piping diagrams;
    a. Plans shall indicate all valve locations,
    b. Plans shall indicate all emergency shut off locations and associated equip ment and signs,
    c. Pipe sizes and working pressures shall be indicated.
14. Drawings and specification for all buildings shall indicate how required fire separa tions and fire resistive integrity will be maintained;
    a. Where penetration of a fire separation wall, floor or rated assembly will be made, drawings shall indicate in sufficient detail how the fire resistive integrity will be maintained,
    b. Where penetrations are sealed, plans shall include specification on what ma terials are to be used to seal penetrations.
15. Fire detection and protection equipment installations;
    a. See Fire Alarm System Plan Submittal Requirements,
    b. See Fire Sprinkler/Standpipe System Plan Submittal Requirements,
    c. See Fire Suppression System Plan Submittal Requirements.

Chapter 3 - Building Plan Submittal Requirements (Continued):

16. Any other items requiring fire department consideration.
17. Drawings shall be scaled.
18. A fire department approved set of plans shall be maintained on the project site at all times while the project is under construction.
19. A set of “As Built” plans shall be provided at the time of Certificate of Occupancy to the Code Official.

See the following sections for additional information pertaining to Building Plan Requirements:

1. Section 3.1- Fire Alarm Submittal Requirements

2. Section 3.2 - Fire Sprinkler/Standpipe System Plan Submittal Requirements

3. Section 3.3 - Installation of Electric Fire Pumps

4. Section 3.4 - Fire Suppression System Plan Submittal Requirements

Section 3.1 - Fire Alarm System Plan Submittal Requirements:

Construction documents for fire alarm systems shall be submitted for review and approval prior to system installation. Submittals shall be made in accordance with Section 907.1 of the North Carolina Fire Code. Systems shall be designed and installed in accordance with NFPA 72 (2007).

1. The fire alarm submittal shall include battery calculations, sequence of operations, voltage drop calculations, a riser diagram, a symbol legend, and, if utilizing ceiling mounted strobes, the appropriate ceiling heights, as required in NFPA 72 (2007).
2. Fire alarm system plans and specifications shall be developed in accordance with NFPA 72 by persons who are licensed Electrical Contractors through the North Carolina State Board of Examiners of Electrical Contractors and shall be experienced in the proper design, application, installation, and testing of fire alarm systems. (Reviewed by a NICET Level III or Level IV or Professional Engineer is preferred).
3. Drawings shall be drawn to scale with sufficient clarity and detail to indicate the nature and character of the work. Drawings should be of a fire alarm design only, not combination drawings using reflected ceiling plans, electrical, mechanical, etc.
4. All construction documents shall be submitted in paper and PDF electronic format.

3.2 - Fire Sprinkler/Standpipe System Plan Submittal Requirements:

Working plans shall be submitted for approval before any equipment is installed or remodeled. The sprinkler submittal shall include hydraulic calculations, manufacturer's data sheets, and any other documents needed to be in compliance with NFPA 13 (2007), 14 (2007), 20 (2007), 22 (2003), 24 (2007) and 25 (2008).

1. The plans, calculations, specifications, and other required information shall be reviewed and signed by a design professional certified as a NICET Level III or Level IV, as defined by the National Institute for Certification in Engineering Technologies, or a Professional Engineer or other approved design certification or show equivalent training and experience.
2. Drawings shall be drawn to scale with sufficient clarity and detail to indicate the nature and character of the work. . Drawings should be of a sprinkler system only, not combination drawings with plumbing, mechanical, etc., unless those systems are critical to the sprinkler system design.
3. Systems shall be designed and installed in accordance with the appropriate NFPA standards - 13, 13D, 13 R (2007).
4. All construction documents shall be submitted in paper and PDF electronic format.

Section 3.3 - Installation of Electric Fire Pumps:

Article 695.3 of the National Electrical Code (NEC) states electric motor-driven fire pumps shall have a reliable source of power.

Occupancies installing electric fire pumps to supply fire sprinkler or other water based systems shall install multiple sources of electrical power in accordance with 695.3(B) of the NEC. Sources such as diesel/electric generator(s), multiple connections to a power grid from separate power substations or other approved sources capable of providing an interrupted power supply to the fire pump shall be installed.

All methods of satisfying NEC Section 695.3 shall be submitted to the Fire Prevention Division for approval at the time of Site and/or Building Plan submittal.

Section 3.4 - Fire Suppression System Plan Submittal Requirements:

The suppression system submittal shall include a design manual or summary sheet of nozzle applications for the specific pre-engineered system to be installed. Systems shall be designed and installed in accordance with the appropriate NFPA standard.

All plans/drawings, calculations, specifications, and other required information shall be reviewed and signed by a design professional certified by the system manufacturer, a Professional Fire Protection Engineer, or other approved certification or equivalent training/ experience.

The submittal shall also include:

1. For kitchen cooking exhaust hoods; the dimensions and specifications of the appliances planned for the installation, specifications of the system activation/control device, nozzle coverage specifications for each appliance, duct, or plenum being protected by the system.
2. For paint booths or other fire suppression system installations; specifications of the system activation/control device, nozzle coverage specifications for each duct, booth, room, area, device or plenum being protected by the system.
3. The system's design number of flow points and flow points used by each system bottle.
4. The proposed methods used to shut down; electrical power, compressed air (gas), flammable/combustible liquid/powder spray systems, makeup air ventilation, HVAC system(s), conveyers and other devices/systems interconnected to fire suppression system.
5. Drawings shall be drawn to scale with sufficient clarity and detail to indicate the nature and character of the work. Drawings shall be of the suppression system only.
6. In cases of "Field Installation" or "Field Connections" being conducted by a contractor or sub-contractor, drawings shall include the original designer's name and qualifications responsible for the design of the exhaust hood/paint booth and/or fire suppression system.
7. In buildings with a fire alarm installed activation of the system shall activate the fire alarm system. If possible, the system shall be zoned separately from other detection devices.
8. In buildings without fire alarms installed, a horn/strobe shall be installed. Activation of the system shall activate the horn/strobe. The location of the horn/strobe shall be at the discretion of the Fire Official. Specification sheets of the device(s) shall be submitted for review.
9. In buildings meeting the criteria in item number 8, a sign reading "If Horn Activates, Call 911" shall be installed at the horn/strobe location. The sign shall be red in color with white letters. Sign and Letter size shall be determined by the Fire Official.
10. All construction documents shall be submitted in paper and PDF electronic format.

Chapter 4 - High-Rise Construction Plan Review Submittal Requirements

High-Rise buildings present the fire department with numerous challenges to Fire and Life Safety during fire/EMS/natural disaster and other types of emergency response incidents. Therefore it is imperative that all Fire and Building Code requirements for fire and life safety systems, devices and construction types be met during the construction of High-Rise buildings.

The 2012 North Carolina Building Code (NCIBC) and associated volumes provide requirements for commercial construction. The NCIBC establishes minimum standards for High-Rise Construction. The North Carolina Fire Code (NCIFC) provides minimum standards for the installation of fire and life safety systems and/or devices to be installed in commercial and residential structures.

The items listed below are the minimum requirements for High-Rise construction plans submitted for review, site preparation, building construction and fire protection system installation:

Fire Sprinkler Systems

1. Fire Sprinkler Systems shall be installed as per Chapter 9 of the NCIFC, Section 403.2 of the NCIBC and NFPA Standards 13 (2007 Ed), 13-R (2007 Ed) and 25 (2008 Ed).
2. Fire Department Connections (FDC) shall be located at a location accessible to the Fire Department decided by the Fire Code Official.
3. FDC's shall be marked with a sign indicating the system(s) they serve and signage shall meet the FPD specification outlined in this manual.
4. Valves controlling water supply to fire sprinkler, standpipe and other types of fire suppression systems shall have electronic tamper switches installed. All tamper switches shall be connected and monitored by the building's fire alarm system.
5. Any valves kept in a normally closed position shall be labeled with a sign meeting FPD specifications indicating "Valve Normally Closed".
6. Water flow, tamper and other fire suppression switches, sensors, devices and other appliances shall be zoned and/or addressed to indicate a distinct signal and location to the fire alarm panel.
7. Fire Pumps and associated controller devices shall be installed as per Chapter 9 of the NCIFC and NFPA Standard 25 (2008 Ed).
8. If an electric fire pump is installed, the pump, controller and all other associated equipment shall be connected to the building's standby power, light and emergency system. Activation shall be in accordance with the requirements of Section 604 of the NCIFC, Article 695 of the National Electric Code and Section 403.10 of the NCIBC.
9. If a water tank is installed to meet the water supply requirements of NFPA Standard 25 (2008 Ed) and NCIFC Section 508, plans shall specify tank design, tank installation and a site plan indicating the tank's installation location. Water tank level shall be monitored by the fire alarm system and a supervisory signal shall be activated upon the water tank reaching a low level indication.

Water tank filling shall be accomplished by automatic means and if the means is controlled by electronic means, the electronic devices shall be supervised.

10. If required by Code, a sprinkler head(s) shall be installed in all hydraulic elevator pit areas.
11. All construction documents shall be submitted in paper and PDF electronic format.

Fire Standpipe Systems

1. Fire Standpipe Systems shall be installed as per Chapter 9 of the NCIFC, Section 905 of the NCIBC and NFPA Standards 14 (2007 Ed), and 25 (2008 Ed).
2. All standpipe connections shall be installed at the landing level to the floor they serve. Connections shall be 2½" National Standard Thread and have a metal cap placed to protect the threads. The installation height of the standpipe connection shall be determined by the Fire Code Official. Piping at the connection shall be painted red in color to a length determined by the Fire Code Official.
3. Fire Department Connections (FDC) shall be installed as per NCIFC Code Section 912 at a location accessible to the Fire Department decided by the Code Official.
4. FDC's shall be marked with a sign indicating the system(s) they serve and signage shall meet the FPD specification outlined in this manual.
5. All valves controlling water supply to fire sprinkler, standpipe and other types of fire suppression systems shall have electronic tamper switches installed. All tamper switches shall be connected to and monitored by the building's fire alarm system.
6. Any valves normally closed shall be labeled with a sign indicating "Valve Normally Closed".
7. Water flow, tamper and other fire suppression switches, sensors, devices and other appliances shall be zoned and/or addressed to indicate a distinct signal and location to the fire alarm panel.
8. Fire Pumps and associated controller devices shall be installed as per Chapter 9 of the NCIFC and NFPA Standard 25 (2008 Ed).
9. If an electric fire pump is installed, the pump, controller and all other associated equipment shall be connected to the building's standby power, light and emergency system. Activation shall be in accordance with the requirements of Section 604 of the NCIFC, Article 695 of the National Electric Code and 403.10 of the NCIBC.
10. If a water tank is installed to meet the water supply requirements of NFPA Standard 25 (2008 Ed) and NCIFC Section 508, plans shall specify tank design, tank installation and a site plan indicating the tank's installation location. Water tank level shall be monitored by the fire alarm system and a supervisory signal shall be activated upon the water tank reaching a low level indication. Water tank filling shall be accomplished by automatic means and if the means is controlled by electronic means, the electronic devices shall be supervised.
11. All construction documents shall be submitted in paper and PDF electronic format.

Fire Alarm/Voice Communication/2-way Communication Systems

1. Fire Alarm Systems shall be installed as per Chapter 9 of the NCIFC, Section 907 of the NCIBC and NFPA Standard 72 (2007 Ed).

2. Water flow, tamper and other fire suppression switches, sensors, devices and other appliances shall be zoned and/or addressed to indicate a distinct signal and location to the fire alarm panel.
3. If installed, all plans shall detail the Smoke Control System operational sequence and integration with the Fire Alarm System.
4. Plans shall detail the building's HVAC shutdown and fire damper sequence in the event of fire alarm activation. All HVAC smoke detectors upon activation, shall initiate a supervisory signal to the building's fire alarm system. A remote annunciator shall be installed at all HVAC smoke detector locations. The remote annunciator shall indicate an alarm condition and be capable of resetting the detector.
5. All HVAC air handling devices shall be numbered with a 6-inch number indicating the unit's system it controls.
6. A firefighter 2-way phone system shall be installed at locations approved by the Fire Code Official and as required by Section 907.2.12.3 of the NCIFC.
7. Plans shall indicate all fire alarm system detection and notification device locations. All notification devices shall be installed to the requirements of the current NC Accessibility Code and the American's with Disabilities Act (ADA). All devices shall be labeled with a label indicating the devices zone number and/or "address".
8. A Fire Alarm Remote Annunciator Panel shall be installed at the main entrance lobby doorway. The location shall be determined by the Code Official.
9. An Emergency Voice/Communication Alarm shall be installed as per Section 907.2.11.3 of the NCIFC. A script and/or recording of the intended Voice/ Communication Alarm message shall be submitted at the time of plan submittal.
10. If monitorable single station smoke alarms are installed in tenant rooms, activation of the devices shall indicate a trouble alarm at a constantly attended location within the facility.
11. All Mag-Lock devices, components and systems shall be connected to the fire alarm and de-energize upon fire alarm activation. Plans shall indicate Mag-Lock locations and integration with the fire alarm system.
12. All Fire Protection Systems and Alarms shall be monitored by an approved Central Station or other approved means as detailed by NFPA Standard 72 (2007 Ed.)
13. A passive repeater shall be installed in the building meeting City of Concord Communications Specifications. The repeater location shall be decided upon by the Concord Communication Director. Installation and period maintenance of the repeater shall be the responsibility of the Building Owner, Current Tenant and/or Lessee. The repeater shall be connected to the building's standby power, light and emergency system. The installation of a passive repeater does not waive Item #6.
14. All construction documents shall be submitted in paper and pdf electronic format.

Fire Command Center

1. A Fire Command Center shall be constructed in the building as required by NCIFC Section 508. As per Code, the Fire Command Center shall have the following minimum items installed:
    A. The emergency voice/alarm communication system unit.
    B. The fire department communications system.
    C. Fire-detection and alarm system annunciator system.

.

D. Annunciator visually indicating the location of the elevators and whether they are operational
E. Status indicators and controls for HVAC air-handling systems.
F. The fire-fighter's control panel required by Section 909.16 for smoke control systems installed in the building.
G. Controls for unlocking stairway doors simultaneously.
H. Sprinkler valve and water-flow detector display panels.
I. Emergency and standby power status indicators.
J. A telephone for fire department use with controlled access to the public telephone system.
K. Fire pump status indicators.
L. Schematic building plans indicating the typical floor plan and detailing the building core, means of egress, fire protection systems and associated devices, fire-fighting equipment and fire department access.
M. A worktable shall be available (Minimum Size 4'X4').
N. Generator supervision devices, manual start and transfer features.
O. Public address system, where specifically required by other sections of this code.

2. Provisions shall also be made to unlock and raise any overhead and sliding fire doors from the Fire Command Center. The method used shall be approved by the Fore Code Official.
3. A minimum of 5 elevator car door and 5 Firefighter Service elevator keys shall be placed in the Master Knox Box in the Fire Command Center.
4. All Fire Command Center, Fire Control Room and Fire Pump Rooms shall be accessible through exterior doors opening to the outside of the building.
5. All Fire Command Center, Fire Control Room, Fire Protection System Rooms shall have a sign meeting FPD Specifications outlined in this manual installed on the door of the room.

Elevators

1. Elevators shall be specified and installed in accordance with ASME A17.1, NCIFC Section 607 and the NCIBC.
2. Plans shall indicate the designated elevator recall floor and the alternate recall floor.
3. Indicate the owner's numbering system for elevators with appropriate sign specifications for all required signs. All sign shall meet the requirements of NCIFC Section 607.2. Signs shall be Bi-lingual English/Spanish.
4. Show pressurization, ventilation, and smoke control of elevator hoistways.
5. Smoke detection shall be installed in all elevator lobbies and control equipment rooms.
6. If required, a sprinkler head(s) shall be installed in all hydraulic elevator pit areas.
7. Plans shall indicate elevator operation while the building is on emergency and Standby Power.
8. Show the number of elevators in a single hoistway.
9. A minimum 5lbs ABC fire extinguisher shall be installed in all elevator equipment control rooms.

10. A minimum of 5 elevator car door and 5 Firefighter Service elevator keys shall be placed in the Master Knox Box in the Fire Command Center.
11. Additions or modifications to entrances or doors will require approval or labeling by a testing laboratory before they will be acceptable.

Standby Power, Light, and Emergency Systems

1. Building services, systems and fire protection elements required to have Emergency and Standby Power Systems shall be installed to meet the requirements listed in NCIFC Section 604, NEC, the NCIBC.
2. Describe the Emergency and Standby Power System operational sequence for buildings with an atrium and for high-rise structures.
3. Detail the size, location and type of generator intended for the installation. Generator and fuel tank locations shall be detailed on the Building Site Plan.
4. Indicate operational emergency power system provided for:
   a.Exit signs and illumination.
   b.Elevator car lighting and operation.
   c.Fire alarm and smoke control systems.
5. Submit an emergency operational plan, which will be approved prior to issuance of a Certificate of Occupancy.
6. Fuel tank installations shall conform to the requirements of NCIFC Chapter 27 and NFPA Standard 30 (2008 Ed).

Smoke Control System

1. Smoke control systems shall be installed as per NCIFC Section 909, NCIBC and all other associated requirements. Mechanical Smoke Control System requirements are detailed on page 22 of this manual.

Seismic Anchorage

1. The building's Fire and Life Safety Systems shall be protected from any seismic events in accordance with the NCIBC.
2. Plans shall indicate the seismic anchorage and protection details of fire and life safety equipment. A Structural Engineer's seal and signature are required

Evacuation and Safety Plan

1. Fire Safety and Evacuation Plans shall be developed by the Building Owner, Current Tenant and/or lessee. Plans shall be developed in accordance with NCIFC Section 404. All plans shall be written and available for review by the facility employees, tenants and Fire/Law Enforcement/EMS personnel.
2. Evacuation plans shall be legible, provide an overhead view and indicate 2-paths of travel to an exit from the area and/or room they are posted in. Two copies of the emergency plan shall be submitted to the Fire Code Official for approval prior to final inspections and acceptance testing.

3. Evacuation Plans shall be posted in each tenant room, residential space, conference and/or meeting room, break room, stairwell and at prominent locations on each floor in the building. All locations shall be approved by the Fire Official at the time of Certificate of Occupancy. The Fire Official may designate additional locations based upon need.
4. After CO and occupancy, quarterly evacuation drills shall be conducted for all employees of the building and documentation shall be provided to the Fire Code Official upon request. Evacuation Drills shall be conducted in accordance with Section 405 of the NCIFC.
5. After CO and occupancy, annual fire safety training shall be given to all employees of the building and documentation shall be provided to the Fire Code Official upon request. Training shall be conducted in accordance with Section 406 of the NCIFC.

- Written plans for the implementation of Items 5 and 6 are required to be in place prior to the approval and issuance of a COC for the building.

Area of Rescue Assistance (ARA)

1. Area of Rescue Assistance shall be installed in accordance with Section 6.3.2 of the North Carolina Accessibility Code, NCIBC and all other associated requirements. Area of Rescue Assistance requirements are detailed on page 24 of this manual.

Acceptance Testing

1. All building services, systems and fire protection equipment shall be tested in accordance with the applicable Standard, Code or reference governing the service, system or fire protection equipment prior to approval and a CO being issued.
2. All testing and approvals by other agencies other than the FPD (NCDOL – Elevators and Boilers, Cabarrus County Building Inspections, etc.) shall be completed prior to FPD approval and a CO being issued.

The provisions of this section are applicable to High-Rise Structures constructed in the City of Concord. All other sections of this manual should be consulted to ensure Code compliance.

Chapter 5 - Mechanical Smoke Control System Plan Submittal Requirements

Section 909 of the 2012 North Carolina Fire Code, establishes minimum standards for Mechanical Smoke Control Systems (MSCS) in buildings and/or structures governed by the North Carolina Building, Electrical and Mechanical Codes.

No work is permitted without approved plans. Section 901.2 of the Fire Code requires Construction Documentation and Calculations to be submitted and approved prior to the installation of Fire Protection Systems. The items listed below are the minimum requirements for Smoke Control System plans submitted for review:

Design Criteria

1. What design method was used to determine system requirements?
2. Is any portion of building HVAC system used in Smoke Control?
3. Is any portion of MSCS normally used by building HVAC system?
4. Provide a note indicating the effect the HVAC system will have on the Smoke Control System. Include all permutations of system status.

Calculations

1. Plans and documentation shall show calculations for the appropriate design method for Smoke Barrier, Pressurization or Airflow (IFC 909.5, 909.6, 909.7)
2. Plans and documentation shall show calculations for the design fire

System Components

1. Detail all fan and fan motor types, including listing mfg., model, belts, etc
2. Include fan motor details (Including fan performance curves)
3. Location of all fans, ductwork, inlets and outlets on a scaled floor plan

Duct and Dampers

1. Duct materials, mfg., listing, test report for leak testing, etc. Including details on duct construction (No flexible duct permitted except for vibration control)
2. Include details on method of duct attachment. Ductwork shall be directly attached to fire-resistive structural members by approved noncombustible hangers.
3. Details on Automatic Dampers, including listing, mfg, model, etc
4. Include details on Automatic Damper Operation

Power Supply System

1. Standby power is required for all atrium smoke control systems
2. Power transfer shall occur within 60 seconds of power failure
3. Standby power and transfer switches and associated equipment shall be located in a separate room
4. The room shall be a 1-hour enclosure ventilated directly to and from the exterior
5. The room door shall be labeled with a sign reading Smoke Control System meeting the specifications listed in the FPD Development Manual.
6. If any control equipment has a volatile memory, a minimum 15 minute of supply of uninterruptible power shall be provided

Sequence of Operation

1. A written description of system operation shall be submitted
2. The description shall include a written sequence of operation
3. A Schedule detailing component response time shall also be included

Detection System

1. A detail of the smoke detection system shall be shown, including positive confirmation of actuation, override and system failure
2. All wiring (conductors) shall be fully enclosed in raceway and protected from sharp edges or other forms of damage
3. Al junctions, access and terminations shall be clearly marked and identified from the exterior of the junction or terminal box

Control Air Tubing

1. All air roll tubing sized to meet the intended system response time
2. All control tubing materials shall be listed and approved
3. All tubing shall be pressure tested for leakage by an approved method
4. All control tubing serving the smoke control system shall be isolated by automatic isolator valves or shall be an independent system

Firefighter Control Panel (FCP)

1. Panel shall be installed in an approved location. Mounting height, panel layout and location shall be approved by the Fire Official
2. Fans, major ducts and dampers shall be shown on a drawing located at the FCP. The drawing shall indicated the system's connection to respective ducts with clear indication of direction of airflow
3. Provisions for manual control and override of automatic controls such as Automatic Fire Doors shall be provided and marked in an approved manner.
4. Plan shall graphically depict the building and smoke control system zones
5. The status of each zone shall be indicated by lamp and appropriate legend
6. Devices, switches and indicators shall bear plain English labels in 12-point Helvetica Bold or equivalent font
7. Indicator lamp color codes shall be approved by the Fire Official
8. Provision for testing of the pilot lamp on FCP shall be provided
9. Fault status shall be indicated by pulsing of function indicator lamp
10. Control actions and priorities shall be listed at the FCP

Control Diagrams

1. Diagrams showing the location of all devices in system, location and function shall be maintained as current and kept on-site (noted on a drawing or plan at the FCP location)

Acceptance Testing

1. System component operational and acceptance testing shall be conducted and response times documented prior to system approval as per IFC 909.20.6.3
2. An Acceptance Testing report shall be provided to the FPD upon completion.

All construction documents shall be submitted in paper and pdf electronic format.

Chapter 6- Area of Rescue Assistance

Section 6.3.2 of the North Carolina Accessibility Code requires building's with certain types of exit configurations to have Area of Rescue Assistance (ARA) . Location and construction of ARA's shall be in accordance with Section 6.3.2.2 of the North Carolina Accessibility Code and the North Carolina Building Code.
Submittals shall include the following:

1. If ARA's are required, plans shall indicate proposed location and construction of Areas of Rescue Assistance including wall hourly ratings.
2. If required, an Approved 2-way intercom system meeting the requirements of Section 6.3.2.5 of the NC Accessibility Code shall be installed at all ARA locations.
3. Submittals shall include specification and cut sheets of all proposed communication devices. Plans shall also indicate ARA Intercom locations and installation heights.
4. A transmitter/receiver master intercom shall be installed at the building's primary entrance or at a constantly attended location approved by the Fire Code Official and Cabarrus County Building Code Official,
5. The master intercom panel shall be labeled with each ARA intercom location. Each ARA station shall be labeled with the ARA's Location and number (Ex. Stairwell #1 - ARA).
6. Installation height and location of all communication devices shall be approved by the Fire Code Official and Cabarrus County Building Code Official,
7. The 2-way communication system shall have an independent source of power and if required, shall be connected to the building's Standby Power, Light and Emergency System.
8. An instructional sign meeting the requirements of Section 6.3.2.5.2 of the NC Accessibility Code shall be posted at all ARA's. Submittal shall include ARA Sign Specifications.
9. All construction documents shall be submitted in paper and pdf electronic format.

Chapter 7 - Occupancy Use Change – Building Permit & Fire Code Requirements

Chapter 8 - Required Fire Inspections For New Construction and Upfit Projects

The Department of Fire and Life Safety requires the following inspections be conducted on all new construction and applicable upfit projects:

a. Underground Fire Line Inspection
b. Underground Flush
c. Rough Fire Sprinkler Piping Inspection
d. Rough Fire Alarm Inspection
e. Final Fire Sprinkler Inspection
f. Final Fire Alarm Inspection
g. Kitchen Hood Extinguishing System Inspection
h. Final Fire Building & Site Inspection
i. Lock Up Keys in Knox Box
j. Gated Community Inspection
k. Fire Hydrant (New Subdivisions and Projects)

All inspections must be requested by the installing contractor and be made at least one (1) day in advance prior to the request date. The contractor must provide all equipment and materials to conduct the inspection and/or test.

Please see the following pages for inspection/test methods and procedures.

Section 8.1 - Temporary Power Requirements

Purpose

The purpose of this guideline is to provide requirements for the installation of Temporary Power to commercial structures located within the City Limits of Concord.

Temporary Power

A request for temporary power shall be made by and in the name of, the "responsible agent" of the property. Upon submittal, the following requirements shall be considered when a request for "Temporary Power" has been made:

Existing Building – Upfit, Employee Training, Load Merchandise, Etc.

Temporary Power is issued by the City; when power to an existing structure has been turned off by the prior occupant and interior remodeling or an "Upfit", Employee Training or Load Merchandise permit has been purchased. This type of Temporary Power is restricted to only those functions or appliances necessary to complete the provisions of the permit. Upon issuance of a Certificate of Compliance, the Temporary Power will be considered to be Permanent Power.

1. The request shall be filled out using a City Temporary Power Form;
2. A fire inspection is required prior to approval being given;
3. All items noted during the inspection shall be corrected prior to power being connected to the building;
4. A permit fee shall be accessed and collected with COC fee at final inspection;
5. The request shall be added in the Firehouse Occupancy Module to COC Fees.

Existing Building - Certificate of Compliance (COC)

Temporary Power is issued by the City and County; when power to a structure has been turned off by the prior occupant and a new tenant wishes to occupy a building or tenant space. Upon the approval of Temporary Power, the building or tenant space will be energized. Upon issuance of a Certificate of Compliance, the Temporary Power will be considered to be Permanent Power.

1. The request shall be filled out using a City and County Temporary Power Form;
2. A fire inspection is required prior to approval being given;
3. All items noted during the inspection shall be corrected prior to power being connected to the building;
4. A permit fee shall be accessed and collected with COC fee at final inspection;
5. The request shall be added in the Firehouse Occupancy Module to COC Fees.

New Building - Certificate of Compliance (COC)

Temporary Power is issued by the City and County; when power to a new structure is initially constructed. This type of Temporary Power is restricted to only those functions required to test equipment and/or appliances and any other items necessary to complete the Certificate of Compliance (COC). Upon issuance of a Certificate of Compliance the Temporary Power will be considered to be Permanent Power.

1. The request shall be filled out using City and County Temporary Power Forms;
2. A fire inspection is required prior to approval being given;
3. All items noted during the inspection shall be corrected prior to power being connected to the building;
4. A permit fee shall be accessed and collected with COC fee at final inspection;
5. The request shall be added in the Firehouse Occupancy Module to COC Fees.

Temporary Power Inspection Procedure

1. A request for temporary power inspection shall be made by and in the name of the “responsible agent” of the property. The “responsible agent” of the property is responsible for scheduling the time, date, and location for the inspection;
2. The “responsible agent” of the property shall be responsible for providing the Cabarrus County Temporary Power form at the time of inspection;
3. Upon his/her arrival, the “Fire Official” shall initiate an inspection of the building with the “responsible agent” of the property and begin documentation of the inspection on a Concord Department of Fire and Life Safety Fire Inspection form;
4. If any hazards or code violations of the Fire Code are observed during the inspection, the “Fire Official” shall document all hazards, code violations and any other items on a Concord Department of Fire and Life Safety Fire Inspection form. All hazards and code violations observed shall be thoroughly explained and detailed to the “responsible agent” at the time of inspection;
5. All hazards and code violations shall corrected and/or repaired by the “responsible agent” prior to temporary power being approved;
6. If no hazards and code violations are observed, the “Fire Official” shall sign any appropriate forms as necessary for approval;
7. The “responsible agent” shall provide documentation that the property has been inspected by a licensed electrician and approved by the Cabarrus County Electrical Inspector. Failure to provide adequate documentation constitutes denial of the Temporary Power request;
8. The “Fire Official” shall document the fee for the inspection on the Concord Department of Fire and Life Safety Fire Inspection form;
9. The “Fire Official” shall request the “responsible agent” of the property to sign the Concord Department of Fire and Life Safety Fire Inspection form. A copy of the Concord Department of Fire and Life Safety Fire Inspection form shall be given to the “responsible agent” of the property;

10. The “responsible agent” of the property shall be responsible for returning the Cabarrus County Temporary Power form and any other documents to the Cabarrus County Building Inspection Department at 65 Church Street South,
11. The “Fire Official” shall submit the Concord Department of Fire and Life Safety Fire Inspection form to the Permit Technician upon returning to the station. The form shall be filed in the Occupancy File.

Required Items For Temp Power Approval.

The following items indicated are the minimum requirements for Temporary Power approval:

1. If applicable, all required fire hydrants must be in their approved locations as indicated on the Site Plan for the facility. All hydrants shall be in-service, tested and approved by the Water Resources Department;
2. Adequate access must be provided and maintained to the site. All turning radiuses shall be inspected, maintained and approved;
3. All required “Life Safety” systems including, but not limited too: fire alarms, emergency lights, sprinkler systems, standpipe systems, hood systems and/or other fire detection/suppression systems must be reviewed, permitted and approved. These systems shall also be in the process of being installed at the time of Temporary Power request;
4. All hand-held temporary fire suppression devices including fire extinguishers, hose carts, wheel fire extinguishing units and other types of devices shall be in place.

The Fire Prevention Division reserves the right to implement additional safe guards and requirements on an “as needed” basis. Occupancy types, construction features, site hazards, topographical concerns, and other items shall be employed in the decision to implement additional safe guards and requirements. Justification for additional safeguards shall be documented and filed.

Disconnection of Service Utilities

Violations of this guideline constitute Section 308.2 (Authority to Disconnect Service Utilities) of the NC Administrative Code being invoked against the “responsible agent” of the property in question.

Upon inspection, any violations of this guideline, or unsafe conditions are observed; the “Fire Official” shall notify the Bureau Chief of the conditions. The Cabarrus County Electrical Inspector shall be notified of the violations and/or unsafe conditions.

The decision to disconnect service utilities to a building shall be jointly made by the Bureau Chief and the Cabarrus County Electrical Inspector. The criteria set forth in Section 308.2 (Authority to Disconnect Service Utilities) of the NC Administrative Code shall be instituted in the notification of the “responsible agent” of the decision to disconnect power to the structure or building.

The “responsible agent” shall be notified in writing within the time periods set forth in the Administrative Code of the violations of this guideline or unsafe conditions and the methods, devices or items needed to correct the violations or unsafe conditions.

At the time of electrical power disconnection, all permits for the property in question shall be revoked. The “responsible agent” shall resubmit all permits and additional fee charges shall be applied.

Upon the reissuance of permits, the “Fire Official” shall dictate what requirements shall be followed for the reconnection if warranted, of Temporary Power to the property in question. After all requirements have been met, it shall be at the discretion of the “Fire Official” and the Cabarrus County Electrical Inspector as to when the power shall be reconnected to the property.

The connection of Temporary Power to a structure is considered to be a privilege and is not guaranteed. Continued abuse of this policy by the “responsible agent” constitutes possible denial of Temporary Power for future projects that involve the “responsible agent”.

Section 8.2 - Underground Fire Line and FDC Inspection & Flush

Fire department jurisdiction over underground piping installations pertains only to fire line water supply piping and inspection authority begins at the termination of the back-flow prevention valves.

During a Fire Department Underground Fire Line and FDC Inspection and Flush inspection the inspector shall inspector shall verify the following:

1. The installing contractor has a valid City of Concord business license. No fire inspections will be conducted until license is obtained.

2. Provide Underground Contractor's Material and Test Certificate. Certificate shall be provided prior to flush inspection. Flush inspection shall not be conducted without this documentation.

3. Consult the approved plans and verify;
   a. Size of piping.
   b. Type of piping.
   c. Depth of piping.
   d. Proper pipe configuration of;
      i. Thrust blocks (See next page for detail) and pipe bracing.
      ii. Protective wrap (polywrap) of piping. (Applies to ductile only.)
      iii. Direction changes.
      iv. Location of;
         1. Backflow Device*.
            a. Proper Size.
            b. Correct Direction.
            c. Monitored tamper switches installed on OS&Y control valves.
            d. If in aboveground vaults, verify heater device installed.
         2. Verify fire department hose connection is installed in accordance with Section 2.3 of this manual.
         3. Verify all fire hydrants are installed in accordance with Section 2.2 of this manual.
         4. Verify all valves are open in the system (including fire hydrant sectional valves).
         5. Observe hydrostatic test of all piping at 150 psi for 2 hours or 50 psi in excess of system working pressure which ever is greater.
         6. Relieve pressure after hydrostatic test and confirm the test gauge returns to zero. (A gauge that does not return to zero could be an indication that the gauge was pegged.)
         7. Observe flushing of all piping with city water until clear.

**For backflow prevention and cross contamination control requirements and specifications consult Appendix D of this manual for the City of Concord Water Resource Department Backflow Prevention and Cross-Connection Control requirements.*

Section 8.2.1 - Thrust Block Specification

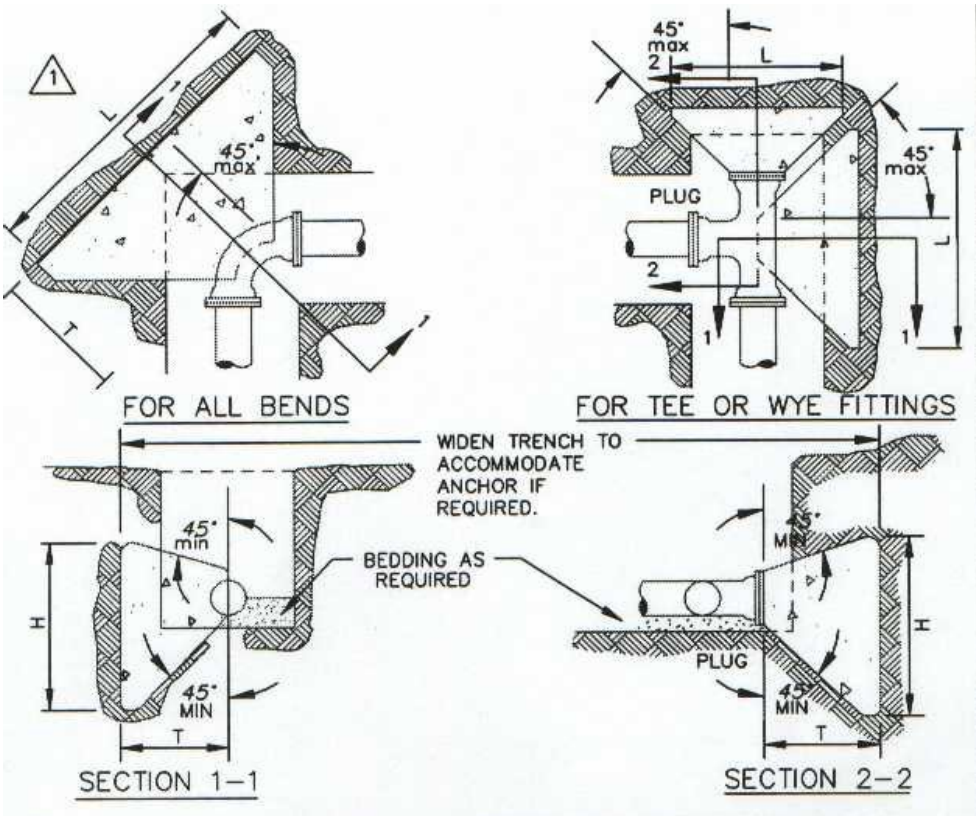

PIPE SIZE	DEGREE OF BEND	BEND DIMENSIONS (FEET)			VOL. CU.YD.	TEE AND PLUGS (FEET)			VOL. CU.YD.
		L	H	T		L	H	T	
4" & 6"	90	2.50	2.50	3.01	0.24	2.00	2.25	2.50	0.15
	45	2.00	2.25	2.60	0.15				
	22 1/2	1.50	2.00	2.52	0.10				
	11 1/4	1.50	2.00	2.50	0.10				
8"	90	3.66	3.16	3.21	0.48	3.16	2.91	2.66	0.32
	45	2.66	2.66	2.77	0.26				
	22 1/2	1.66	2.16	2.69	0.13				
	11 1/4	1.66	2.16	2.67	0.13				
10" & 12"	90	4.83	3.83	3.42	0.83	3.83	4.00	2.83	0.52
	45	3.33	3.58	2.95	0.43				
	22 1/2	2.33	2.58	2.86	0.24				
	11 1/4	1.83	2.33	2.84	0.18				

1. THRUST BLOCKS ARE REQUIRED WHENEVER THE PIPELINE : CHANGES DIRECTION, CHAN SIZE, DEAD ENDS AND AT VALVES.
2. USE 2500 P.S.I. CONCRETE.
3. NO CONCRETE SHALL BE POURED ON ANY PART OF THE JOINT.
4. THE CONSULTING ENGINEER SHALL BE RESPONSIBLE TO THE VERIFY THE TYPE & SIZE ALL THRUST BLOCKS.

Section 8.4 - Rough Fire Sprinkler Piping Inspection

1. The fire sprinkler contractor shall schedule inspection.
2. Verify the installing contractor has a valid City of Concord business license. No fire inspections will be conducted until license is obtained.
3. Consult the approved plans.
4. Verify;
   a. Proper type of piping.
   b. Backflow device (if installed in building) for size, type, and direction.
   c. Confirm the installation of the piping does not have excessive change of directions that are not indicated on approved plans. (Excessive use of extra fittings, such as elbows may effect hydraulic calculations).
   d. Proper size of piping.
   e. All piping penetrations through fire rated assemblies have been properly sealed by an approved method.
   f. Proper piping hangers and supports with correct spacing.
   g. Sway bracing is installed per NFPA Code requirements. Sway bracing is required at top of fire riser, turn of directions, and every forty feet on main piping only.
   h. Proper type and temperature of sprinkler heads.
   i. Proper clearance of sprinkler heads from obstructions.
   j. Check for correct distances between sprinkler heads, off of walls, maximum coverage per sprinkler heads, suspended ceilings and distance below roof deck.
   k. Check for installation of orifice in inspector's test. (Orifice shall be the same size as the smallest orifice installed in the system.)
   l. Check to ensure fire sprinklers are not painted. Painted fire sprinklers shall be replaced, they shall not be cleaned.
   m. All control, auxiliary, and inspector's test valves shall not be located more than seven feet above finish floor or grade.
   n. Minimum 12" x 36" Access panels shall be provided for all valves located inside a wall or concealed space. Signage shall be provided on the outside of access panel indicating type of valve that is concealed within.
5. The standpipe contractor shall provide all hose, gauges and associated equipment to perform all tests.
6. Observe hydrostatic test of all piping at 200 psi for 2 hours or 50 psi in excess of system working pressure which ever is greater. Testing shall include all FDC piping.
7. Relieve pressure after hydrostatic test and confirm the test gauge returns to zero. (A gauge that does not return to zero could be an indication that the gauge was pegged.)
8. Verify all signage is in place. (Examples: control valves, inspectors test, and main drain.)
9. Verify that spare sprinkler head cabinet is installed in an area that will not exceed 100 degrees Fahrenheit and has inside the correct number of spare sprinkler heads, sprinkler wrench, and NFPA 25.
10. Verify fire department hose connection is installed in accordance with Section 2.3 of this manual.

Section 8.4 - Final Fire Sprinkler Inspection

1. The fire sprinkler contractor shall schedule inspection.
2. Verify the installing contractor has a valid City of Concord business license. No fire inspections will be conducted until license is obtained.
3. Fire sprinkler contractor shall provide an Above Contractor Material and Test Certificate for each system installed. Final fire inspection shall not be conducted without this documentation.
4. Consult approved plans.
5. Verify proper components are installed and functioning on the sprinkler system riser.
   a. Tamper switch.
   b. Water flow switch.
6. The standpipe contractor shall provide all hose, gauges and associated equipment to perform all tests.
7. Observe a main drain test and verify the residual pressure at the base of the riser meets or exceeds the required the system demand pressure listed in the approved hydraulic calculations.
   a. Test shall be performed at peak water demand.
   b. Test must flow for at least two minutes.
8. Document static and residual pressures listed on the calculation plate.
9. Verify proper signage on riser components.
   a. Main drain.
   b. Access panels shall be provided for all valves located inside a wall or concealed space. Signage shall be provided on the outside of access panel indicating type of valve that is concealed within.
   c. Control valve.
   d. Inspectors test.
   e. Hydraulic Calculation Plate. (If sign is on a fire riser located outside or in an area exposed to corrosion then sign shall be metal and engraved or stamped.)
10. Verify that space sprinkler head cabinet is installed in an area that will not exceed 100 degrees Fahrenheit and has inside the correct number of spare sprinkler heads, sprinkler wrench, and NFPA 25 (2008).
11. Verify floor is sealed where riser penetrates the building.
12. Walk through building to verify;
    a. Proper placement, type, and temperature of sprinkler heads.
    b. Sprinkler heads are free of obstructions by building elements (i.e. light fixtures, ceiling fans, decorations, etc.)
    c. Check to ensure fire sprinklers are not painted. Painted fire sprinklers shall be replaced, they shall not be cleaned.
    d. Check to ensure fire sprinklers escutcheons are properly installed.
13. Observe activation test of fire alarm notification appliances, including electric bell on fire sprinkler system water flow through inspector's test valve. Alarms shall activate in 90 seconds or less with the flow switch adjustment setting on or greater than "B". Document time alarms activated.

Section 8.5 - Rough Standpipe Piping Inspection

1. The standpipe contractor shall schedule inspection.
2. Verify the installing contractor has a valid City of Concord business license. No fire inspections will be conducted until license is obtained.
3. Consult the approved plans.
4. Verify;
    a. Proper type of piping.
    b. Backflow device (if installed in building) for size, type, and direction.
    c. Confirm the installation of the piping does not have excessive change of directions that are not indicated on approved plans. (Excessive use of extra fittings, such as elbows may effect hydraulic calculations).
    d. Proper size of piping.
    e. All piping penetrations through fire rated assemblies have been properly sealed by an approved method.
    f. Proper piping hangers and supports with correct spacing.
    g. Sway bracing is installed per NFPA Code requirements. Sway bracing is required at top of fire riser, turn of directions, and every forty feet on main piping only.
    h. Proper type of discharge outlets (2½, 1½ with caps) and National Standard Hose Threads.
5. The standpipe contractor shall provide all hose, gauges and associated equipment to perform all tests.
6. Observe hydrostatic test of all piping at 200 psi for 2 hours or 50 psi in excess of system working pressure which ever is greater. Testing shall include all FDC piping.
7. Relieve pressure after hydrostatic test and confirm the test gauge returns to zero. (A gauge that does not return to zero could be an indication that the gauge was pegged.)
8. Verify all signage is in place. (Examples: control valves, drains and main drain.
9. Verify fire department hose connection is installed in accordance with Section 2.3 of this manual.

Section 8.6 - Final Standpipe Inspection

1. The standpipe contractor shall schedule inspection.
2. Verify the installing contractor has a valid City of Concord business license. No fire inspections will be conducted until license is obtained.
3. Standpipe contractor shall provide an Above Contractor Material and Test Certificate for each system installed. Final fire inspection shall not be conducted without this documentation.
4. Consult approved plans.
5. Verify proper components are installed and functioning on the standpipe system.
    a. Tamper switch.
    b. Water flow switch.
6. The standpipe contractor shall provide all hose, gauges and associated equipment to perform all tests.
7. Test of Manual Standpipes:
    a. For a manual standpipe, a fire department pumper or portable pump of a capacity to provide required flow and pressure shall be used to verify the system design by pumping into the fire department connection.
    b. A flow test shall be conducted at each roof outlet to verify that the required pressure is available at the required flow.
    c. The maximum flow to be demonstrated from a single hose connection shall be 946 L/min (250 gpm) for a 65-mm (2-in.) connection and (379 L/min) 100 gpm for a 40-mm (1-in.) connection with a minimum flow pressure of 100 PSI at the discharge valve .
8. Testing of Automatic- and Semiautomatic-Dry Systems.
    a. Automatic- and semiautomatic-dry systems shall be tested by initiating a flow of water from the hydraulically most remote hose connection.
    b. The system shall deliver a minimum of 946 L/min (250 gpm) at the hose connection within 3 minutes of opening the hose valve with a minimum flow pressure of 100 PSI at the discharge valve.
    c. Each remote control device for operating a semiautomatic system shall be tested in accordance with the manufacturer's instructions.
9. Verify floor is sealed where riser penetrates the building.
10. All valves, pressure-regulating devices and associated equipment shall be tested to ensure proper working order. Pressure and gravity tanks shall be filled and tested for leakage and proper flow. Pumps shall be tested and deliver the system's intended flow and pressure.
11. Observe activation test of fire alarm notification devices. Alarms shall activate in 90 seconds or less with the flow switch adjustment setting on or greater than "B". Document time alarms activated.
12. All flow pressures including fire department pump pressures shall be documented.
13. The installing contractor shall provide the owner with the following:
    a. All literature and instructions provided by the manufacturer describing the proper operation and maintenance of equipment and devices installed
    b. A copy of NFPA 25 (2008), Standard for the Inspection, Testing, and Maintenance of Water-Based Fire Protection Systems.

Section 8.7 - Rough Fire Alarm Inspection

1. Must be scheduled by the fire alarm contractor.
2. Verify the installing contractor has a valid City of Concord business license. No fire inspections will be conducted until license is obtained.
    a. Installation of fire alarm systems includes pulling wire, installing conduit, placement of fire related boxes (pull stations, horn strobes, detectors, etc.)
3. Consult approved plans.
4. Verify the following:
    a. Proper wire type.
    b. Proper wire gauge.
    c. Verify that a Class “B” loop has been installed. All fire alarm systems installed in the City of Concord shall be a minimum Class “B”.
    d. Verify support of all conduit and back boxes, including protective bushings in conduit.
    e. Verify support of all wiring is per NFPA 72 (2007) and National Electrical Code (NEC).
    f. Verify location of all fire alarm system devices.
    g. Location of fire alarm control panel.
    h. Location of annunciator panel or annunciator strip pad if required.
    i. Proper separation of wiring. (A minimum of four feet separation between wiring on the horizontal runs and one-foot separation on vertical runs shall be provided.)
5. Verify that fire alarm wiring has not been painted or damaged during installation.
6. Duct detectors are required for units that exceed 2000 cfm or units that share an area that exceed 2000 cfm collectively. When duct detectors are required the shall provide the following:
    a. Unit shut down on activation of the duct detector.
    b. On activation of the duct detector a fire alarm signal shall be sent to the fire alarm control panel.
    c. A ceiling remote annunciator shall be installed with a LED at ceiling level that will light up when the duct detector is activated.
    d. All devices shall be marked with their appropriate zone indicator.
7. Verify hood fire suppression system wiring has been installed from kitchen exhaust hood system to fire alarm control panel “FACP”.

Section 8.8 - Final Fire Alarm System Inspection

1. Provide NFPA 72 Report. Report shall be completed and faxed to Fire Prevention Office at 704-782-3488 prior to scheduling final fire alarm inspection. Final fire inspection shall be conducted without this documentation.
2. Verify the installing contractor has a valid City of Concord business license. No fire inspections will be conducted until license is obtained.
3. Consult approved plans.
4. Verify the proper location and type of all fire alarm devices.
5. Observe fire alarm system functional tests of all fire alarm devices, including duct detectors.
6. Observe activation test of fire alarm notification appliances, including electric bell on fire sprinkler system water flow through inspector's test valve. Alarms shall activate in ninety seconds or less with the flow switch adjustment setting on or greater than "B".
7. Observe activation test of fire sprinkler control valve tamper switches. On activation of the tamper switch a supervisory signal shall be sent to the fire alarm control panel.
8. Observe activation test of fire alarm notification appliances on kitchen hood suppression system activation, if applicable.
9. Verify the following from all tests:
   a. Measure decibel reading of notification appliances. Decibel reading shall be 15 dB above ambient noise level.
   b. Verify proper voltage drop, if required.
   c. Verify a Class "B" fire alarm system is installed.
   d. Verify the proper size of the batteries.
   e. Verify duct detectors provide the following; HVAC unit shuts down on activation of the duct detector, on activation of the duct detector, an alarm signal shall be sent to the fire alarm panel and a ceiling remote annunciator is installed with a LED provided at ceiling level that lights up when the duct detector is activated.
   f. Observe a twenty-four stand by battery power test. Electrical breaker that provides power to the fire alarm control panel shall be turned off twenty-four hours prior to this test. At the end of the twenty-four hours an audible test shall be conducted for five minutes.
   g. Verify that all signals are received at the fire alarm control panel.
   h. Verify that all signals are received at the annunciator, if applicable.
   i. Verify that all signals were received at the off-site monitoring agency.
   j. Monitoring report shall be faxed to Fire Prevention Division at 704-782-3488 after completion of final testing. Monitoring report shall include twenty-four hour battery power fault.
10. Fire alarm Zone maps shall be located at each FACP and if necessary, at all remote annunciator locations. Maps shall include:
    a. Floor plan of the occupancy being protected by the Fire Alarm.
    b. All detection device locations.
    c. Indicate type of detection device.
    d. Indicate detection device zone assignment or "Address".
    e. The map shall be properly mounted to the wall and measures shall be taken to protect the map from damage or vandalism.
11. Fire Official shall place an "In The Event Of Fire Alarm Activation" sticker on fire alarm panel or at remote annunciator location.

Section 8.9 - Kitchen Hood Suppression System Inspection

1. The kitchen hood suppression system contractor shall schedule inspection.
2. Verify the installing contractor has a valid City of Concord business license. No fire inspections will be conducted until license is obtained.
3. Consult approved plans.
4. Verify the following;
   a. Location of manual pull stations.
   b. Signage of manual pull stations.
   c. Location, size, and type extinguishing agent.
   d. Proper pipe size.
   e. Proper pipe support.
   f. Proper nozzle type.
   g. Nozzle location.
   h. Observe air movement through all system nozzles.
   i. Observe test of fusible link.
   j. Observe activation of manual pull stations.
   k. Observe deactivation of all fuel sources under hood during all tests (Electric and Gas).
   l. Observe deactivation lf “make up air” on test activation of system (Exhaust air shall remain working).
   m. Observe activation of fire alarm notification appliances on kitchen hood suppression system activation on all tests and verify that signal is received at the fire alarm panel.
   n. Verify proper placement of Class “K” fire extinguisher. Class “K” fire extinguisher shall be located within thirty feet of cooking equipment.
   o. Indicate total number of flow points per system and flow points used.
   p. Verify 3-inch system numbers installed at pull station(s), firing cabinet and hood locations to coordinate system component locations.
   q. If applicable, verify HVAC unit shut down.
   r. In buildings without fire alarms installed a horn/strobe shall be installed. Activation of the system shall activate the horn/strobe. The location of the horn/strobe shall be at the discretion of the Fire Official.
   q. A sign reading “If Horn Activates, Call 911” shall be installed at the horn/strobe location.

Section 8.10 - Final Fire Building & Site Inspection

1. Verify building address size and location.
   a. 6” minimum (or comparable) letters/numbers are required.
   b. Address characters shall be visible from street or road fronting the property and if required, on all fire department approaches.
2. Verify proper location of Knox Box(s).
   a. Knox boxes shall be installed approximately sixty inches above finish grade.
   b. Keys to all doors and pad locks shall be placed inside Knox Box at final inspection.
   c. Call 704-920-5517 to lock up keys when locks are changed “every time”.
3. Verify the placement of fire extinguishers
   a. Verify correct type (Example: 5# ABC 10 BC)
   b. Proper location. Fire extinguishers shall be installed a maximum travel distance of every seventy-five feet.
   c. All fire extinguishers shall be installed a maximum of five feet to the top of the fire extinguisher above finish floor or grade and shall be unobstructed from access or view. Provide signage as required.
4. Verify building door signage.
   a. Provide the letters “FACP” on all unobvious doors that give access to the fire alarm control panel. This can be accomplished with self-adhesive letters, stencil, or a sign with minimum three-inch high letters in contrast to the door colors.
   b. Provide the letters “RISER ROOM” on all doors that give access to riser. This can be accomplished with self-adhesive letters, stencil, or a sign with minimum three-inch high letters in contrast to the door colors.
   c. Provide the letters “FACP” and “RISER ROOM” on all doors that give access to the fire alarm control panel and fire riser. This can be accomplished with self-adhesive letters, stencil, or a sign with minimum three-inch high letters in contrast to the door colors.
   d. Provide on the suite front doors the “SUITE NUMBER OR LETTER”. This can be accomplished with self-adhesive characters, stencil, or a sign with minimum six-inch high characters in contrast to the door colors.
   e. Provide on the suite back or side doors the “SUITE NUMBER OR LETTER” and “BUILDING ADDRESS NUMBERS”. This can be accomplished with self-adhesive characters, stencil, or a sign with minimum six-inch high characters in contrast to the door colors.
5. Verify fire lanes are appropriately marked.
   a. Where designated, fire lanes shall not be less than twenty (20) feet wide at any point, and curves and comers shall be wide enough to permit the passage or operation of all fire equipment owned by the city. The surface of the fire lanes shall be an all-weather surface and shall be of sufficient strength to support all firefighting apparatus used by the fire department.
   b. All fire lanes and access roads must be maintained by the property owner, which includes painting pavement and placing permanent (NO PARKING FIRE LANE) signs.

c. Outlining or painting the fire lane on the roadway surfaces shall be done in red with white letters that read "FIRE LANE" at fifty (50) foot intervals or as otherwise directed by the fire department.
d. Fire lanes shall be marked with permanent "NO PARKING FIRE LANE" signs.
e. Signs shall be placed along the fire lane at intervals not to exceed one hundred (100) feet.
f. Signs shall measure twelve (12) by eighteen (18) inches; have red letters on a white reflective background.
g. Signs must be metal construction only, plastic or wooden signs are not acceptable.
h. Mounted at a minimum height of four (4) feet to a maximum of seven (7) feet.

Chapter 9 - Fire Lane Ordinance

City Ordinance Section 34-93. Fire lanes.

a. Fire lanes shall be designated at all locations within the authority and jurisdiction of the City of Concord in accordance with the North Carolina Fire Code and as approved by the fire code official.
b. Fire lanes installed shall conform to the requirements of North Carolina Fire Code and shall be approved by the fire code official prior to installation.
c. Fire lanes shall be installed in accordance with the specifications on file at the Fire Prevention Office.
d. Roadways, driveways and access ways shall not be marked as fire lanes without first obtaining approval from the fire department. Detailed plans showing the location of the lanes may be required to determine whether or not any proposed markings meet specifications established and on file at the Fire Prevention Office.

City Ordinance Section 34-94 Signs and Marking.

a. All fire lanes and access roads must be marked with signs indicating “No Parking Fire Lane” as described in the specifications on file at the Fire Prevention Division. Said specifications shall include, but are not limited to, the following:
b. Signs shall measure 12 inch by 18 inch and have red letters on a white reflective background.
c. Signs must be metal construction only. Plastic or wooden signs are not acceptable.
d. Signs shall be mounted at a minimum height of four feet to the maximum of seven feet.
e. Signs shall be placed along the fire lane at intervals not to exceed 50 feet and as designated by the fire code official.
f. Signs shall be placed on both sides of the lane when striping is required on both sides of the lane by the North Carolina Fire Code.
g. Outlining or painting the fire lane on the roadway surfaces shall be done in yellow, red, or white with contrasting letters that read “FIRE LANE” at 50 foot intervals and/or as specified in the specifications on file at the Fire Prevention Office or as otherwise directed by the fire official. Striping shall be a minimum of 5" in width."
h. Existing fire lanes shall continue in effect as installed until such time as they are in need of re-stripping due to wear or re-paving.

City Ordinance Section 34-95. Violations and Enforcement.

a. Any person who parks a vehicle in, obstructs, or allows the obstruction of a designated fire lane shall be liable for a civil penalty of $100.00 upon receipt of a citation issued by the fire or police chief or any designee of either.

a. Any vehicle or object obstructing a designated fire lane, whether public or private, may be towed or removed without prior notification of the owner, and at the owner's expense.
b. The registered owner of the vehicle parked in the fire lane shall be responsible for all civil penalties issued and any towing or related charges accruing hereunder.
c. Civil penalties due hereunder shall be collected under the provisions set forth in Section 1-6.

See the following examples pictured below:

Fire Lane Pavement Marking Specification

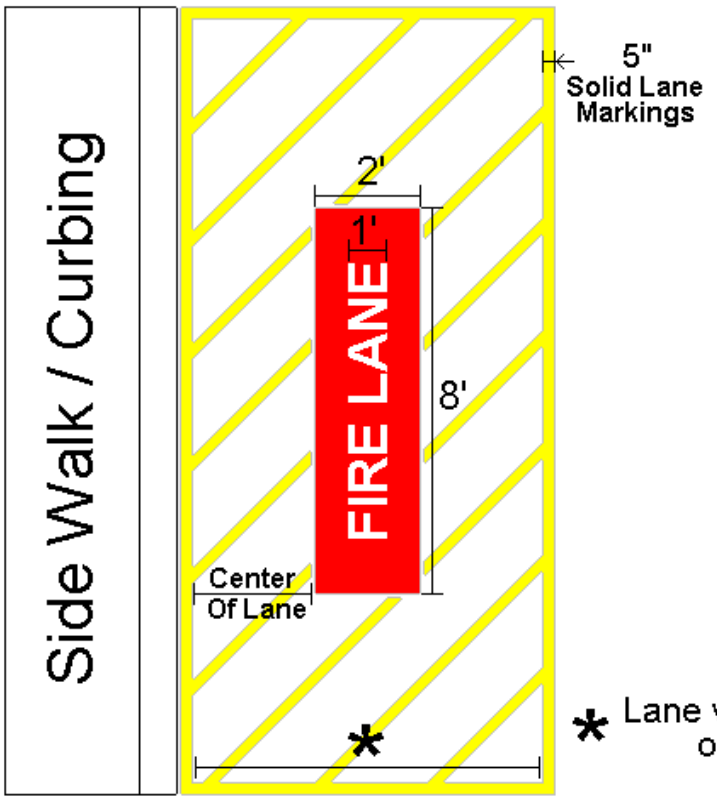

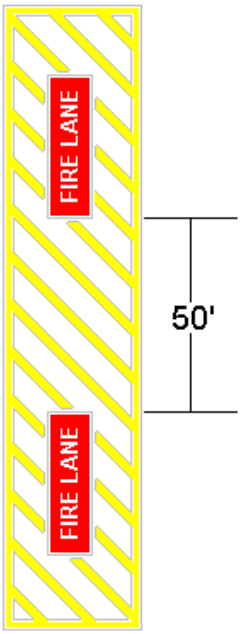

* Lane width determined at Plan Review or Installation Requirement.

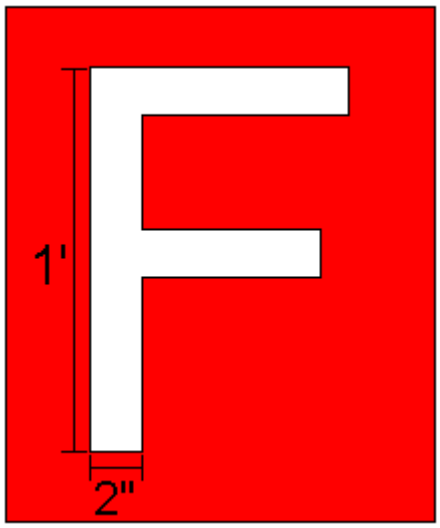

<u>Marking:</u> All designated fire lanes shall be marked accordingly. The perimeter of the fire lanes shall be designated by the Fire Official. All stripes shall be 5" in with. The interior of this area shall be marked with 5" yellow stripes at 45 degree angles to the perimeter strip and be 4-feet on center. All Letters shall be 1' tall and have a 2" stroke.

Sign Specifications:

Sign Placement:

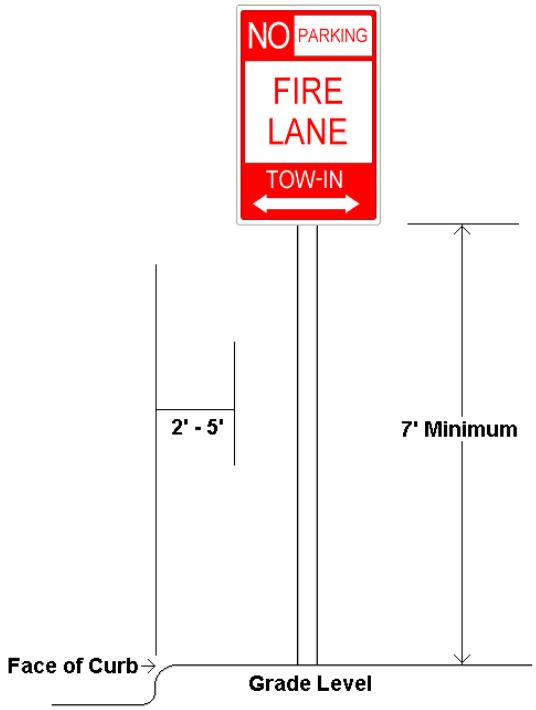

Chapter 10 - Gated Community Gate Inspection

1. Plans and specifications for electric gate systems shall be submitted to the City of Concord Fire & Life Safety Fire Prevention Division for review and approval prior to scheduling gate inspection. For review permit questions please call 704 -920-5517.
2. All gates limiting access will be required to provide emergency access controls for Fire Department entry.
3. The gates shall be designed so that the access roadway or turning radius 55 feet shall not be obstructed by the operation of the gate. Minimum set back from the public streets shall be a distance determined by the City Engineer and allow the emergency vehicle the ability to safely operate the lock box or panel. Turning radius from the public street shall be 55 feet.
4. Clear width of the roadway shall be a minimum of twenty feet clear width on all entrances. Exit roadways shall be a minimum of sixteen feet clear width or larger on all exits. Unless otherwise approved by the fire department.
5. Subdivisions may have a divided entrance and exit gates. The entrance side shall have a clearance of twenty feet clear width, the exit side sixteen feet clear width.
6. Operation at the gate shall be by preemption device and key switch, access code or audible.
7. Access controls shall be exterior to the gate and located for activation by the vehicle operator without dismounting from the vehicle. The height of the lock box/ control panel shall be sixty-six inches, measured from the finished grad line of the street.
8. The lock box, or key switch must be an approved model utilized by the Concord Fire & Life Safety Fire Prevention Division (FPD) and ordered through the FPD. Call 704-920-5517.
9. Traffic Preemption opening device shall be on all motorized gates. An approved High/Low Siren gate operating device shall be installed. Plans and device specifications shall be submitted to the FPD for approval prior to installation.
10. Gates must fully open with fifteen seconds of activation and remain in the open position until closed by operation of the electrical control device.
11. The control pedestal must be identified with a minimum six inch by ten-inch sign with red letters on a white background. This sign must be securely fastened to the pedestal and legible from the approaching vehicle. “EMERGENCY FIRE DEPARTMENT ACCESS”.
12. Battery backup for all motorized gates is required, unless the gate fail safe (open) in the event of a power failure.
13. Secondary “EXIT ONLY” gates shall be set up for Fire Department emergency accesses. Exit only gates, which are not motorized, shall be installed per City of Concord Fire & Life Safety detail. Details are available at the City of Concord Fire & Life Safety Fire Prevention Division by calling 704-920-5517. Exit only gates shall have a minimum clearance of twenty (20) feet clear width and be posted with a sign that states “CAUTION GATE OPENS OUT”. The ground shall be painted with a yellow strip showing the depth of the gate swing.

Chapter 11 - Fire Protection Equipment & Room Identification Signs

The owner or person in charge of the building shall ensure that all required labels and room identification signs are installed and visible for fire and other emergencies that could impact the operations of his/her building/business. The following items should be designed and installed in compliance with the following.

Fire Code - Interior Signs

In existing construction, the following signs if required, shall be installed in accordance with the appropriate Code sections.

310.3 "NO SMOKING" Signs. The Code Official is authorized to order the posting of "NO SMOKING" signs in a conspicuous location in each structure or location in which smoking is prohibited. The content, lettering, size, color and locations of "NO SMOKING" signs shall be approved.

507 HAZARDS TO FIREFIGHTERS. Interior and Exterior access to shaftways – Doors, windows and other devices that open into a shaftway communicating between 2 or more floors shall be plainly marked with the words SHAFTWAY red letters in at least 6" high on a white background.

510.1 Fire Protection Equipment Rooms. Interior Rooms that house Fire Protection Equipment including but not limited to the following: Fire Alarm Control Panel, Sprinkler System, Riser Room, Fire Command Center and Emergency Generators. These rooms shall have approved signs required to identify fire protection equipment and their location, and shall be constructed of durable materials, permanently installed and readily visible. These signs shall state the specific equipment inside as listed above. "FACP" for fire alarm control room. "RISER ROOM" for sprinkler riser rooms. "FIRE COMMAND CENTER" for rooms containing Fire Command Center telephones and associated equipment. "EMERGENCY GENERATOR" for rooms containing emergency generators and associated equipment. Rooms with multiple fire protection equipment installed shall be identified by "FIRE PROTECTION EQUIPMENT".

All rooms shall be identified by a sign located on the exterior side of the room. It shall be installed with its horizontal centerline 5' (above the finished floor) a.f.f. on the strike jamb/latch side of the door. If no wall space is available, then it shall be placed on the nearest wall adjacent to it or centered on the door face at 5' a.f.f. Signs shall be red in color and have white 3-inch letters.

605.3.1 ELECTRICAL ROOMS. Rooms that contain any electrical equipment include but not limited to the following: electrical control panels, disconnects, transformers, feeder/branch circuit switchboards, electrical panel boards and troughs or other electrical control equipment. These rooms shall be marked with a plainly visible and legible sign stating "ELECTRICAL ROOM".

606.9.3.4 MECHANICAL REFRIGERATION. Emergency control boxes shall be provided with a permanent label on the outside cover reading: FIRE DEPARTMENT USE ONLY- REFRIGERANT CONTROL BOX, and including the name of the refrigerant in the system.

607.2 ELEVATOR RECALL. Emergency signs shall have a pictorial sign of a standardized design posted adjacent to each elevator call station on all floors instructing occupants to use the exit stairways and not to use the elevators in case of fire. The sign shall read: IN FIRE EMERGENCY, DO NOT USE ELEVATOR. USE EXIT STAIRS.

608.6 STATIONARY LEAD-ACID BATTERY SYSTEMS. Doors into rooms containing these battery systems shall be provided with signs that state the room contains lead-acid battery systems, that the battery room contains energized electrical circuits and that the battery electrolyte solutions are corrosive liquids.

703.2.1 FIRE DOORS. If necessary, rated fire doors that are designed to be kept normally open shall read:
FIRE DOOR-DO NOT BLOCK

If necessary, rated fire doors that are designed to be kept normally closed shall read:
FIRE DOOR-KEEP CLOSED

907.4.4 MANUAL FIRE ALARM BOXES. Where fire alarm systems are not monitored by a supervising station, an approved permanent sign that reads: WHEN ALARM SOUNDS-CALL FIRE DEPARTMENT. Such signs shall be installed adjacent to each manual fire alarm box.

In addition to FIRE CODE requirements the N.C. ACCESSIBILTY CODE requires the following signs be installed. For purposes of enforcement, these signs will only be enforced in <u>new construction</u>.

All interior rooms shall be identified by a minimum size 6” x 9” sign located on the exterior side of the room. It shall be installed with its horizontal centerline 5’ (above the finished floor) a.f.f. on the strike jamb/latch side of the door. If no wall space is available, then it shall be placed on the nearest wall adjacent to it or centered on the door face at 5’ a.f.f.

Letters shall be of contrasting color 1” high to 2” maximum with Grade 2 Braille underneath. All lettering on signs shall be capitalized. Letters and numbers shall be raised 1/32 inch from the background on which they are mounted. Letters and numerals shall have sharply defined edges and may be either sans serif or simple serif. All signs shall have letters, numerals and characters and the background on which they are located in an eggshell (semi-matte), matte (flat) or other non-glare finish only.

Stroke-width-to-height ratio shall be between 1:5 and 1:10. Letters and numbers on signs shall have a width-to-height ratio between 3:5 and 1:1.

All signs shall be installed in accordance with the N.C. Accessibility Code, formerly known as the handicap code or N.C. Building Code, Volume I-C.

Safety devices designed and intended for public use (i.e. fire alarm pull stations, manual mechanisms activating emergency signaling devices, fire extinguishers, etc.) shall be identified with signage in accordance with the above criteria.

In addition to FIRE CODE requirements the MECHANICAL CODE requires the following signs be installed. For purposes of enforcement, these signs will only be enforced in new construction.

BOILER ROOM. A room that is primarily utilized for the installation of a boiler.

FURNACE ROOM. A room primarily utilized for the installation of fuel-burning space-heating and water-heating appliances other than boilers. (oil, wood, coal, kerosene)

MACHINERY ROOM. A room meeting prescribed safety requirements in which refrigeration systems or components thereof are located.

MECHANICAL EQUIPMENT/APPLIANCE ROOM. A room or space in which non fuel-fired mechanical equipment and appliances are located. (natural and liquefied petroleum gas)

FIRE CODE - Exterior Signs

505.1 ADDRESS. Numbers 6” minimum (or comparable) height in reflective lettering shall also be required on the front of the building mounted high enough to not be blocked by normal delivery traffic. If multiple suites exist, a reflective suite number shall be required over or on the front and rear doors.

510.1 Fire Protection Equipment Rooms. Exterior Rooms that house Fire Protection Equipment including but not limited to the following: Fire Alarm Control Panel, Sprinkler System, Riser Room, Fire Command Center and Emergency Generators. These rooms shall have approved signs required to identify fire protection equipment and their location, and shall be constructed of durable materials, permanently installed and readily visible. These signs shall state the specific equipment inside as listed above. “FACP” for fire alarm control rooms. “RISER ROOM” for sprinkler riser rooms. “FIRE COMMAND CENTER” for rooms containing Fire Command Center telephones and associated equipment. “EMERGENCY GENERATOR” for rooms containing emergency generators and associated equipment. Rooms with multiple fire protection equipment installed shall be identified by “FIRE PROTECTION EQUIPMENT”.

All rooms shall be identified by a sign located on the exterior side of the room. It shall be installed with its horizontal centerline 5' (above the finished floor) a.f.f. on the strike jamb/latch side of the door. If no wall space is available, then it shall be placed on the nearest wall adjacent to it or centered on the door face at 5' a.f.f. Signs shall be red in color and have white 3-inch letters.

912.2.2 FIRE DEPARTMENT CONNECTION. On existing buildings, wherever the fire department connection is not visible, the fire department connection shall be indicated by an approved sign mounted on the street front or on the side of the building. All signs shall be red in color and have 6-inch white letters reading "FDC".

Section 11.1 - Fire Department Sign Templates

Fire Sprinkler Riser Room Sign.

1/2" Letter Stroke

Sign to be 4x20 inches in size and red in color with white reflective 3-inch letters.

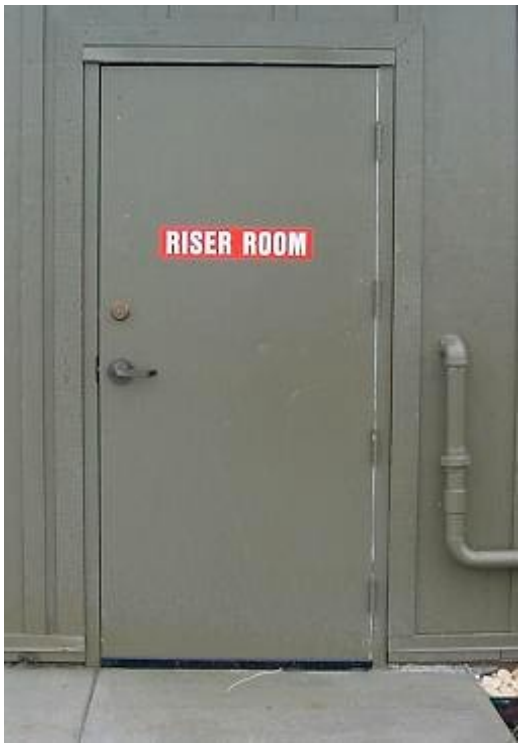

Carbon Dioxide Drink System Exterior Signs

Exterior signs to be located adjacent to rear/side maintenance door.

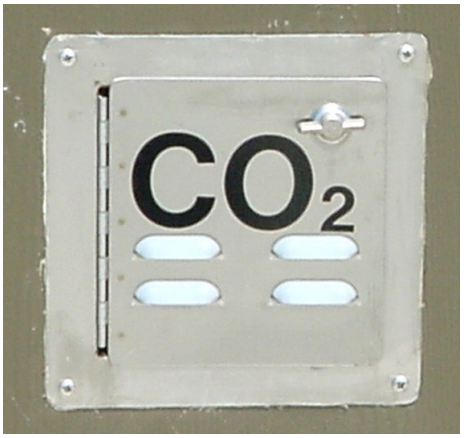

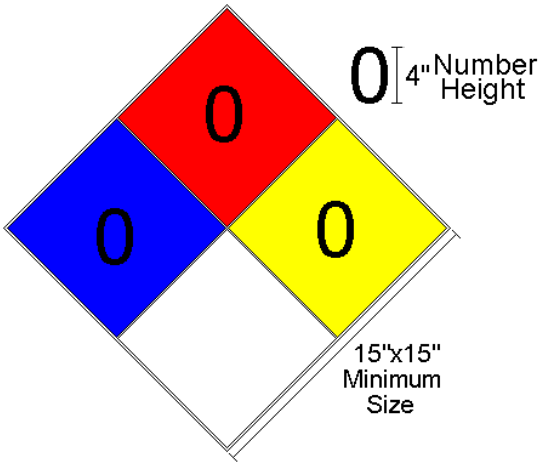

NFPA 704 Sign to be 15x15 inches minimum with 4-inch numbers and/or symbols. Numbers on sign will be determined by the Fire Official.

CO2 letters to be mounted on exterior tank fill connection protective door.
CO2 Letters to be 3-inches in size (Subscript size for number 2 is optional).
Letters shall contrast with background.

Fire Alarm Control Panel Room Sign

Sign to be 4” in height, red in color with white reflective 3-inch letters.

Fire Suppression System Component Numbers

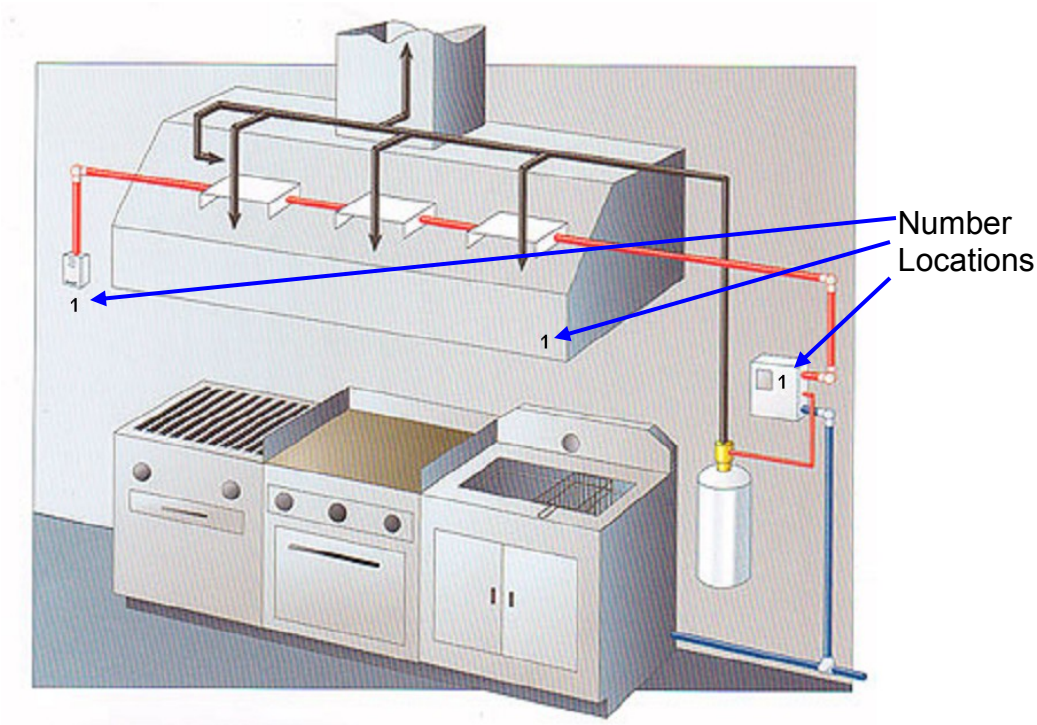

Numbers to be 3-inches in height, contrasting in color and be placed on firing cabinet, hood (paint booth, etc…) and at pull station(s). Each system shall be numbered separately.

Chapter 12 - Knox Box Program

The Knox Box system used by the City of Concord Fire & Life Safety Department is a program designed to expedite entry and eliminate property damage caused by the forcible entry required for evaluation of an emergency situation, and allows the Fire Department to secure the building when leaving.

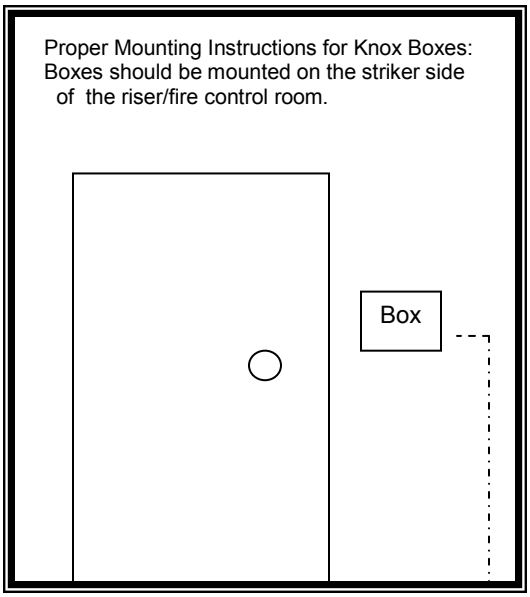

A Knox Box is a highly secure, UL listed, nearly impenetrable steel vault used for the storage of entry keys, and alarm panel or mechanical system keys, for use by the Fire Department. The keys to access the Knox Boxes are located in locked boxes inside of the emergency response apparatus and cannot be duplicated.

The Concord Fire & Life Safety Department has used the Knox Box system since 1987. To-date, there has never been a box stolen, broken or accessed illegally.

The enforcement of use of the Knox Boxes is the City of Concord Ordinance Section 34-3 (Lock Boxes). Section 506.1 of the I.F.C. reads, “When access to or within a structure or an area is restricted because of secured openings or where immediate access is necessary for life-saving or fire-fighting purposes, the code official is authorized to require a key box to be installed in an accessible location. The key shall be of an approved type and shall contain keys to gain access as required by the code official”.

The determination of the code official is that all buildings, which contain automatic fire alarm systems or fire suppression sprinkler systems, shall provide a box and the required keys for access to the building. An important reason for this is the real possibility of an alarm occurring when the business is locked and vacant. The availability of a key allows firefighters to safely enter the building, without causing any damage, evaluate the conditions present and secure the premises.

Please contact the Concord Fire & Life Safety Fire Prevention Division at (704) 920-5517 to purchase a Knox Box. A Fire Department authorized signature on the filled out order form will be required before Knox will process the order.

IMPORTANT

YOUR KNOX BOX SHALL BE INSTALLED AS DESIGNATED ON YOUR FIRE DEPARTMENT APPROVED PLANS. IF THE LOCATION OF THE KNOX BOX IS NOT INDICATED ON THE APPROVED PLANS, HAVE THE FIRE INSPECTOR APPROVE THE LOCATION PRIOR TO INSTALLATION.

THE KNOX BOX SHALL BE INSTALLED BETWEEN 4 TO 5 FEET FROM THE GROUND UNLESS OTHERWISE APPROVED BY THE FIRE INSPECTOR. THE KNOX BOX SHALL NOT BE BLOCKED FROM PLAIN VIEW BY ANY OBSTRUCTIONS (LANDSCAPING, ETC.).

IF YOU ARE UNSURE OR HAVE QUESTIONS, CALL THE FIRE INSPECTOR PRIOR TO INSTALLING THIS KNOX BOX!

ONCE THE KNOX BOX IS MOUNTED AND YOU ARE READY TO LOCK THE KEY IN, CALL 704-920-5517 TO REQUEST AN INSPECTOR TO COME OUT TO LOCK THE BOX.
THANK YOU!

Chapter 13 - City of Concord Adopted Fees, Rates and Charges

For a current listing of fees, rates and charges assessed by the City of Concord please visit the following webpage:

http://www.concordnc.gov/Departments/Finance/AdoptedFeesSchedule/tabid/484/Default.aspx

The Concord Department of Fire and Life Safety Fees are located on page 14 of the pdf file.

If you have any questions or need additional information please give the Fire Prevention Division a call at 704-920-5517.

Chapter 14 - City Of Concord Standards

The following are City of Concord Standards pertaining to various local Code opinions. These standards are derived from Section 102.7 (Subjects not regulated by this Code) and 102.8 (Matters not provided for) of the North Carolina Fire Prevention Code (2012).

> **102.7 Subjects not regulated by this code.**
> Where no applicable standards or requirements are set forth in this code, or are contained within other laws, codes, regulations, ordinances or bylaws adopted by the jurisdiction, compliance with applicable standards of the National Fire Protection Association or other nationally recognized fire safety standards as are approved shall be deemed as prima facie evidence of compliance with the intent of this code. Nothing herein shall derogate from the authority of the code official to determine compliance with codes or standards for those activities or installations within the code official's jurisdiction or responsibility.
>
> **102.8 Matters not provided for.**
> Requirements that are essential for the public safety of an existing or proposed activity, building or structure, or for the safety of the occupants thereof, which are not specifically provided for by this code shall be determined by the code official.

I. Installation of Non-Required Fire Protection/Fire Suppression Systems.

1. Any non-required fire protection system installed voluntarily into a building shall be installed as if it were required by the Code. This applies equally to Fire alarm systems, fire sprinkler systems, fire suppression systems and any other system regulated by the Code.
2. Partial coverage fire protection/fire suppression systems are not permitted.

II. Fire Alarm System Installation in Strip Malls or Similar Occupancies

Fire alarm systems installed in Strip Malls or Similar Occupancies shall be installed to the following guidelines:

1. The fire alarm panel shall be installed in a central location approved by the Fire Official.
    - Examples of approved locations include but not limited to are; House electrical panel locations. Central HVAC rooms, central electrical rooms, etc…
    - Examples of non-approved locations include but not limited to are; Individual tenant spaces, exterior common areas, etc…

2. A remote annunciator capable of resetting the entire fire alarm system shall be installed at a location approved by the Fire Official.
    - Examples of approved locations include but are not limited to are; Public common areas, interior public spaces, etc…
    - Examples of non-approved locations include but are not limited to; Individual tenant spaces and similar locations.

3. The fire alarm panel shall have a street address capable of alerting the fire department to the fire alarm panel or annunciator panel location(s). The address of the system shall be approved by the Fire Official.
4. Approved/listed audible/visible alerting devices meeting NFPA 72 (2007) and the North Carolina Accessibility Code shall be provided throughout the building. Device type and locations shall be approved by the Fire Official.
5. Any additional detection or alerting devices added by the individual tenant or occupant shall be connected to the building fire alarm panel. NO stand alone systems or devices shall be installed or maintained.
6. The fire alarm system shall be monitored by an approved Central Station Monitoring Company.
7. A Knox Box shall be installed on the building as per City Ordinance (Sec. 34-3. Lock boxes).
8. Additional safeguards or requirements concerning the installation of Fire Alarm System Installation in Strip Malls or Similar Occupancies may be implemented by the Code Official based upon a case-by-case basis.

Appendix A - City of Concord/Cabarrus County Permit Submittal Process Matrix

TO OCCUPY AN EXISTING SPACE, NEW TENANTS, ETC. WITH NO BUILDING MODIFICATIONS

	Reason	Department Name	Address	Phone #
1	To apply for a Certificate of Compliance (COC)	City of Concord Development Services Department (DSD)	City Hall Annex 66 Union St So.	(704) 920-5152
2	To apply for business license.	City of Concord Tax Office	Municipal Building 26 Union St. So.	(704) 920-5234 (704) 920-5235
3a	If power is "NOT" on. A certified electrician must pull an electrical permit to verify space is ok to turn power back on.	Cabarrus County Building Inspection Department (BID)	Government Center, 2nd Flr 65 Church St SE.	(704) 920-2128
3b	BID will fax approval to City Customer Service after electrical inspection.	City of Concord Customer Service	Municipal Building 26 Union St. So.	(704) 920-5247 (704) 920-5244
4	If power is "ON". Call and schedule a fire inspection.	City of Concord Fire Prevention Division (FPD)	Fire Station #3 100 Warren C Coleman Blvd.	(704) 920-5517
5a	If fire inspection "IS" approved.	City of Concord Development Services Department (DSD)	City Hall Annex 66 Union St So.	(704) 920-5152
5b	If fire inspection is "NOT" approved. Fix deficiencies listed on fire inspection report & call for a re-inspection.	City of Concord Fire Prevention Division (FPD)	Fire Station #3 100 Warren C Coleman Blvd.	(704) 920-5517
6	To obtain a Certificate of Compliance & pay all fees (DSD & FPD)	City of Concord Development Services Department (DSD)	City Hall Annex 66 Union St So.	(704) 920-5152
7	To obtain a Certificate of Occupancy (CO)	Cabarrus County Building Inspection Department (BID)	Government Center, 2nd Flr 65 Church St SE.	(704) 920-2128

UPFIT BUILDING PERMIT SUBMITTAL

	Reason	Department Name	Address	Phone #
1	Submit 3 Sets of Plans (DSD, Fire & Electric) & Apply for Zoning Clearance Permit (ZCP). A target date will be given.	City of Concord Development Services Department (DSD)	City Hall Annex 66 Union St So.	(704) 920-5152
2	Submit 2 Sets of Plans. A target date will be given.	Cabarrus County Building Inspection Department (BID)	Government Center, 2nd Flr 65 Church St SE.	(704) 920-2128
3	Obtain ZCP once approved by all parties involved after target date & pay fees.	City of Concord Development Services Department (DSD)	City Hall Annex 66 Union St So.	(704) 920-5152
4	Obtain Building Permit (BU) once approved & pay fees.	Cabarrus County Building Inspection Department (BID)	Government Center, 2nd Flr 65 Church St SE.	(704) 920-2128
5	Request Temp Power when ready for power & inspection.	Cabarrus County Building Inspection Department (BID)	Government Center, 2nd Flr 65 Church St SE.	(704) 920-2128
6	Request Temp Power inspection.	City of Concord Fire Prevention Division (FPD)	Fire Station #3 100 Warren C Coleman Blvd	(704) 920-5517
7	Request all inspection required on BU permit.	Cabarrus County Building Inspection Department (BID)	Government Center, 2nd Flr 65 Church St SE.	(704) 920-2128
8	Obtain & Read FPD Development Manual (Obtain from FPD)	City of Concord Fire Prevention Division (FPD)	Fire Station #3 100 Warren C Coleman Blvd.	(704) 920-5517
9	To obtain Certificate of Compliance (COC)	City of Concord Development Services Department (DSD)	City Hall Annex 66 Union St So.	(704) 920-5152
10	To obtain Certificate of Occupancy (CO)	Cabarrus County Building Inspection Department (BID)	Government Center, 2nd Flr 65 Church St SE.	(704) 920-2128

NEW CONSTRUCTION BUILDING PERMIT SUBMITTAL

	Reason	Department Name	Address	Phone #
1	Contact DSD for plan submittal process.	City of Concord Development Services Department (DSD)	City Hall Annex 66 Union St So.	(704) 920-5152
2	Contact BID for plan submittal process.	Cabarrus County Building Inspection Department (BID)	Government Center, 2nd Flr 65 Church St SE.	(704) 920-2128
3	Apply for business license (business and all contractors/sub-contractors)	City of Concord Tax Office	Municipal Building 26 Union St. So.	(704) 920-5234 (704) 920-5235
4	Obtain ZCP once approved by all parties involved after target date & pay fees.	City of Concord Development Services Department (DSD)	City Hall Annex 66 Union St So.	(704) 920-5152
5	Obtain Building Permit (BU) once approved & pay fees.	Cabarrus County Building Inspection Department (BID)	Government Center, 2nd Flr 65 Church St SE.	(704) 920-2128
6	Request Temp Power when ready for power & inspection.	Cabarrus County Building Inspection Department (BID)	Government Center, 2nd Flr 65 Church St SE.	(704) 920-2128
7	Request Temp Power inspection.	City of Concord Fire Prevention Division (FPD)	Fire Station #3 100 Warren C Coleman Blvd.	(704) 920-5517
8	Request all inspections required on BU permit.	Cabarrus County Building Inspection Department (BID)	Government Center, 2nd Flr 65 Church St SE.	(704) 920-2128
9	Obtain & Read FPD Development Manual (Obtain from FPD) Request all inspections required per project.	City of Concord Fire Prevention Division (FPD)	Fire Station #3 100 Warren C Coleman Blvd.	(704) 920-5517
10	To obtain Certificate of Compliance (COC)	City of Concord Development Services Department (DSD)	City Hall Annex 66 Union St So.	(704) 920-5152
11	To obtain Certificate of Occupancy (CO)	Cabarrus County Building Inspection Department (BID)	Government Center, 2nd Flr 65 Church St SE.	(704) 920-2128

Appendix B

Concord Fire Prevention
Permit Applications

Applications for North Carolina Fire Code Required Construction Permits can be reproduced from the following pages.

Applications included are;

1. Fire Alarm System Installation
2. Quick Start Fire Alarm Installation
3. Fire Alarm Submittal Checklist
4. Fire Sprinkler System Installation
5. Fire Extinguishing System Installation

CONCORD FIRE & LIFE SAFETY

FIRE ALARM SYSTEM PERMIT APPLICATION

_____ **Standard** (Work other than qualified Quick Start Permits)	_____ **Quick Start (Existing Systems Only)** (Less than 5 devices and no work in remote area, Only)
Submit at: Concord Fire & Life Safety Fire Marshal's Office 100 Warren C. Coleman Blvd N. Concord, NC 28027 (704) 920-5517; fax (704) 920-6936	**Development #** _____ **Project #** _____ **Permit #** _____ **[THIS BOX FOR STAFF USE ONLY]**

Permit Fees paid at time of application are **NON-REFUNDABLE**

(Standard: Total fee due at application) 1 copy
Permit $150 and Test Inspection $150

(Quick Start: Total fee due at application) 1 copy
Permit $150

NOTE: **Standard Permit** submittals for review need to include (2) copies of stamped plans. Specifications and applicable calculations. **Quick Start Permit** submittals need to include (2) copies of stamped plans, specifications and declaration of work not occurring in remote area.

**** If you want an approved copy returned, please submit 2 copies & enclose a self-stamped, addressed envelope.***

Project Name/Tenant	_____	Bldg Permit #	_____
Site Address	_____	Unit/Bldg/Suite #	_____
Complex Name		Tax Parcel #	

Contractor Name	_____	Phone #	_____
Contact Name	_____	Fax #	_____
Business Address	_____	City	_____ State, ZIP
State License Number	_____	State License Expiration Date	_____
e-mail address		Concord Business License #	

~ **SCOPE OF WORK** ~

Modification to existing system(s):

Number of Control Panels (C) _____; Number of Transmitters (T): _____; Power Supply (sub) _____
Total number of other devices (detectors, horns, strobes, etc…) _____
Modifications/TI's: Number of Control Panels (C) _____; Transmitters (T) _____; Power Supply (sub) _____
Total number of other devices (detectors, horns, strobes, etc…) _____

Description of work: (if additional space is needed the information should be placed on company letterhead)

_____

_____

Place a check mark on the appropriate scope of work to determine which permit you are applying for:

- ☐ Installation or relocation of more than 6 devices shall use the Standard Permit process.
- ☐ Installation or relocation of a STU, FACP or transmitter shall use the Standard Permit process.
- ☐ Installation of auxiliary power supplies or installation/relocation less than 5 or fewer devices may use the Quick Start Permit process.

NOTE: **Submittals for review must include all items identified in the Fire Department Standards. Failure to provide any necessary information may result in a delay of the review process or rejection of your application.**

I understand that all applicable codes apply. Errors and/or omissions on the plans and corrections from field inspections are the responsibility of the owner/contractor. All work is subject to the compliance with City of Concord ordinances and laws of the State of North Carolina.

_____ **SIGNATURE** _____

PRINT NAME (Applicant)

PHONE _____
DATE _____

12 April 2012

This form must be accompanied with the appropriate SUBMIT ALL CHECKLIST.

CONCORD FIRE & LIFE SAFETY

Fire Marshal's Office
100 Warren C. Coleman Blvd • Concord, North Carolina 28027
Telephone 704-920-5517 • Fax 704-920-6936

FIRE ALARM Submittal Checklist for QUICK START PERMITS

This checklist must be completed and submitted along with all Standard Fire Alarm Permit Applications & Fees

---

To qualify for a QUICK START permit the system must have a current UL Certificate or FM Placard, and the proposed changes involve less than 5 devices, and may include a remote power supply.

One set of reference plans shall be submitted in a minimum 8 ½" x 11" format. The Designer of Record must oversee and stamp each sheet of the submittal.

An email, with an attached pdf file, can be sent in if the file isn't too large (email to fmo@concordnc.gov).

Any modification to a UL Certificated or an FM Placarded system may require an updated certificate or placard to be issued.

The submittal shall include:

- ☐ Copy of UL certificate, **or**
- ☐ Copy of FM placard;
- ☐ A description, the location, and the scope of the project;
- ☐ One (1) plan set for field reference;
- ☐ One (1) set of manufacturer's specification sheets on all equipment to be used. Clearly mark the specific model of equipment used.
- ☐ A list of the contractually responsible parties:

    1. Monitoring, retransmission of signals, associated record keeping, & reporting of signals;
    2. Installation;
    3. Testing and Maintenance; and
    4. Runner service.

I VERIFY THAT I DESIGNED OR DIRECTLY SUPERVISED THE DESIGN OF THIS ALARM SUBMITAAL AND I VERIFY THAT SUBMITTAL REQUIRMENTS ARE ACCURATE AND TRUE TO THE BEST OF MY KNOWLEDGE.

Designer of Record Name: _____ Designer of Record Number: _____

Designer of Record Signature: _____ Date: _____

CONCORD FIRE & LIFE SAFETY

Fire Prevention Division

100 Warren C. Coleman Blvd • Concord, North Carolina 28027
Telephone 704-920-5517 • Fax 704-920-6936

FIRE ALARM Submittal Checklist for STANDARD PERMITS

This checklist must be completed and submitted along with all Standard Fire Alarm Permit Applications & Fees

Standard Fire Alarm Permit Application shall be used for the installation or modification of more than 5 devices, panel or transmitter installations, or any modifications of an existing system that does not have a current UL Certification or FM Placard.

All new installations or any modification to an existing system shall required third party verification as required in NFPA 72 for central station systems. If the system is not currently Certified or Placarded, provide an Owners Declaration of Fire Alarm Certifying or Placarding Company form. The submittal shall include the following:

☐ **One (1) hard copy of manufacturer specifications on all equipment to be used and One (1) Adobe file on CD or an email with an attached pdf file can be sent in if the file isn't too large (email to fmo@concordnc.gov).**

1. Clearly mark the specific model of equipment used;
2. Battery calculations, in an approved format;
3. Voltage drop calculations for each indicating circuit.

☐ If base plans are used that have additional but unnecessary information, then the additional information shall be deleted or shall not be copied at greater than half tone;

☐ Plans shall include a labeled site plan of no small than 1":50' scale; and

☐ Package is to include: Designer Name, Designer Company, a copy of Designer's Qualifications and/or certifications to design system from manufacturer, and Proof of Certification/Training on the installer/handler of said suppression system being installed.

Note of the face of the plans the contractually responsible parties for the following:

1. Monitoring, retransmission of signals, associated record keeping, & reporting of signals;
2. Installation;
3. Testing and Maintenance; and
4. Runner service.

Fire Alarm System Plan Submittal Requirements Highlights:

Construction documents for fire alarm systems shall be submitted for review and approval prior to system installation. Submittals shall be made in accordance with Section
907.1 of the North Carolina Fire Code. Systems shall be designed and installed in accordance with NFPA 72 (2007).

1. The fire alarm submittal shall include battery calculations, sequence of operations, voltage drop calculations, a riser diagram, a symbol legend, and, if utilizing ceiling mounted strobes, the appropriate ceiling heights, as required in NFPA 72 (2007).

2. Fire alarm system plans and specifications shall be developed in accordance with NFPA 72 by persons who are licensed Electrical Contractors through the North Carolina State Board of Examiners of Electrical Contractors and shall be experienced in the proper design, application, installation, and testing of fire alarm systems. (Must be by a NICET Level III or Level IV or Professional Engineer is preferred).

3. Drawings shall be drawn to scale with sufficient clarity and detail to indicate the nature and character of the work. Drawings should be of a fire alarm design only, not combination drawings using reflected ceiling plans, electrical, mechanical, etc.

I VERIFY THAT I DESIGNED OR DIRECTLY SUPERVISED THE DESIGN OF THIS ALARM SUBMITAAL AND I VERIFY THAT SUBMITTAL REQUIRMENTS ARE ACCURATE AND TRUE TO THE BEST OF MY KNOWLEDGE.

Designer of Record Name: _____ Designer of Record Number: _____

Designer of Record Signature: _____ Date: _____

CONCORD FIRE & LIFE SAFETY

FIRE SPRINKLER SYSTEM PERMIT APPLICATION

_____ **Standard** **(Work other than qualified Quick Start Permits)**	_____ **Quick Start (Existing Systems Only)** **(Less than 5 heads and no work in remote area, Only)**
Submit at: Concord Fire & Life Safety Fire Marshal's Office 100 Warren C. Coleman Blvd N. Concord, NC 28027 (704) 920-5517; fax (704) 920-6936	**Development #** _____ **Project #** _____ **Permit #** _____ **[THIS BOX FOR STAFF USE ONLY]**

Permit Fees paid at time of application are **NON-REFUNDABLE**

(Standard: Total fee due at application)
Permit $150 and Test Inspection $150

(Quick Start: Total fee due at application)
Permit $150

NOTE: **Standard Permit** submittals for review need to include (2) copies of stamped plans. Specifications and applicable calculations. **Quick Start Permit** submittals need to include (2) copies of stamped plans, specifications and declaration of work not occurring in design or remote area.

*** If you want an approved copy returned, please submit 2 copies & enclose a self-stamped, addressed envelope.**

Project Name/Tenant	_____	Bldg Permit #	_____
Site Address	_____	Unit/Bldg/Suite #	_____
Complex Name		Tax Parcel #	

Contractor Name	_____	Phone #	_____
Contact Name	_____	Fax #	_____
Business Address	_____	City	_____ State, ZIP
State License Number	_____	State License Expiration Date	_____
e-mail address		Concord Business License #	

~ **SCOPE OF WORK** ~

New System(s):

Number of Heads _____ Number of Risers/Supplies _____

Fire Pump? ☐Yes ☐ No If yes, quantity _____

Number of Standpipe Systems _____

Modification to existing system(s):

Number of Risers affected _____ Number of heads added, deleted, relocated _____

Do your plans conform to the requirements of NFPA 13, Plans & Calculations? ☐Yes ☐ No

If no, why? _____

Description of work (if additional space is needed the information should be placed on company letterhead)

_____

_____

- Failure to provide any necessary information may result in delay of the review process or rejection of your application.
- Failure to obtain a valid permit to working on a system will result in a doubling of your permit fees and a stop work order issued on the job.
- A valid permit and approved plans for a standard permit, or a reference copy for a quick start, must be at the job site prior to scheduling your final inspection.
- Please allow a minimum of two weeks for Concord Fire & Life Safety review process.

I understand that all applicable codes apply. Errors and/or omissions on the plans and corrections from field inspections are the responsibility of the owner/contractor. All work is subject to the compliance with City of Concord ordinances and laws of the State of North Carolina.

_____ **SIGNATURE** _____

PRINT NAME (Applicant) **PHONE** _____

DATE _____

Rev. 27, February 2012

CONCORD FIRE & LIFE SAFETY

FIRE EXTINGUISHING SYSTEM PERMIT APPLICATION

Submit at:		
Concord Fire & Life Safety	**Development #**	_____
Fire Marshal's Office	**Project #**	_____
100 Warren C. Coleman Blvd N.	**Permit #**	_____
Concord, NC 28027		
(704) 920-5517; fax (704) 920-6936	**[THIS BOX FOR STAFF USE ONLY]**	

Permit Fees paid at time of application are **NON-REFUNDABLE**
(Standard: Total fee due at application)
Permit $150 and Test Inspection $150 – Payable to City of Concord

**** If you want an approved copy returned, please submit 2 copies & enclose a self-stamped, addressed envelope.***

Project Name/Tenant	_____	Bldg Permit #	_____
Site Address	_____	Unit/Bldg/Suite #	_____
Complex Name		Tax Parcel #	

Contractor Name	_____	Phone #	_____
Contact Name	_____	Fax #	_____
Business Address	_____	City	_____ State, ZIP
State License Number	_____	State License Expiration Date	_____
e-mail address		Concord Business License #	

~ TYPE OF WORK ~

Type of Fixed Extinguishing System:

A device is defined as: fusible link, nozzle, manual pull station, or agent cylinder.

☐ **Kitchen Hood (UL 300)** **# of devices _____** **Releasing Panel _____**

☐ **Paint and/ Spray Booth** **# of devices _____** **Releasing Panel _____**

☐ **Other _____** **# of devices _____** **Releasing Panel _____**

Description of work (if additional space is needed the information should be placed on company letterhead):

_____

_____

NOTE: A separate fire alarm permit is required for the connection of any fire protection system to a new or existing fire alarm system.

I understand that all applicable codes apply. Errors and/or omissions on the plans and corrections from field inspections are the responsibility of the owner/contractor. All work is subject to the compliance with City of Concord ordinances and laws of the State of North Carolina.

_____ **SIGNATURE** _____

PRINT NAME (Applicant) **PHONE** _____

DATE _____

Appendix C

NCOSFM
Appendix B Example

Concord
NORTH CAROLINA
FIRE
AND
LIFE SAFETY

2006 APPENDIX B
BUILDING CODE SUMMARY
FOR ALL COMMERCIAL PROJECTS
(EXCEPT 1 AND 2-FAMILY DWELLINGS AND TOWNHOUSES)

(Reproduce the following data on the building plans sheet 1 or 2)

Name of Project: _____

Address: _____ Zip Code _____

Proposed Use: _____

Owner/Authorized Agent: _____ Phone # (_____) _____ - _____ E-Mail _____

Owned By: ☐ City/County ☐ Private ☐ State

Code Enforcement Jurisdiction: ☐ City_____ ☐ County_____ ☐ State

---

LEAD DESIGN PROFESSIONAL: _____

DESIGNER	FIRM	NAME	LICENSE #	TELEPHONE #	E-MAIL
Architectural	_____	_____	_____	(____)_____	_____
Civil	_____	_____	_____	(____)_____	_____
Electrical	_____	_____	_____	(____)_____	_____
Fire Alarm	_____	_____	_____	(____)_____	_____
Plumbing	_____	_____	_____	(____)_____	_____
Mechanical	_____	_____	_____	(____)_____	_____
Sprinkler-Standpipe	_____	_____	_____	(____)_____	_____
Structural	_____	_____	_____	(____)_____	_____
Retaining Walls >5' High	_____	_____	_____	(____)_____	_____
Other	_____	_____	_____	(____)_____	_____

2006 EDITION OF NC CODE FOR: ☐ New Construction ☐ Addition ☐ Upfit

EXISTING: ☐ Reconstruction ☐ Alteration ☐ Repair

CONSTRUCTED _____ **ORIGINAL USE** _____ **RENOVATED** _____ **CURRENT USE** _____

BUILDING DATA

Construction Type: ☐ I-A ☐ II-A ☐ III-A ☐ IV ☐ V-A
☐ I-B ☐ II-B ☐ III-B ☐ V-B

Mixed construction: ☐ No ☐ Yes Types _____

Sprinklers: ☐ No ☐ Partial ☐ Yes ☐ NFPA 13 ☐ NFPA 13R ☐ NFPA 13D

Standpipes: ☐ No ☐ Yes Class ☐ I ☐ II ☐ III ☐ Wet ☐ Dry

Fire District: ☐ No ☐ Yes **Flood Hazard Area:** ☐ No ☐ Yes

Building Height: Feet _____ Number of Stories _____

Mezzanine: ☐ No ☐ Yes

Gross Building Area:

FLOOR	EXISTING (SQ FT)	NEW (SQ FT)	SUB-TOTAL
6th Floor			
5th Floor			
4th Floor			
3rd Floor			
2nd Floor			
Mezzanine			
1st Floor			
Basement			
TOTAL			

ALLOWABLE AREA

Primary Occupancy: Assembly ☐ A-1 ☐ A-2 ☐ A-3 ☐ A-4 ☐ A-5
☐ Business ☐ Educational Factory ☐ F-1 Moderate ☐ F-2 Low
Hazardous ☐ H-1 Detonate ☐ H-2 Deflagrate ☐ H-3 Combust ☐ H-4 Health ☐ H-5 HPM
Institutional ☐ I-1 ☐ I-2 ☐ I-3 ☐ I-4
I-3 Condition ☐ 1 ☐ 2 ☐ 3 ☐ 4 ☐ 5
☐ Mercantile Residential ☐ R-1 ☐ R-2 ☐ R-3 ☐ R-4
Storage ☐ S-1 Moderate ☐ S-2 Low ☐ High-piled
☐ Utility and Miscellaneous ☐ Parking Garage ☐ Open ☐ Enclosed ☐ Repair Garage

Secondary Occupancy: _____

Special Uses: ☐ 402 ☐ 403 ☐ 404 ☐ 405 ☐ 406 ☐ 407 ☐ 408 ☐ 409 ☐ 410 ☐ 411 ☐ 412
☐ 413 ☐ 414 ☐ 415 ☐ 416 ☐ 417 ☐ 418 ☐ 419 ☐ 420 ☐ 421

Special Provisions: ☐ 508.2 ☐ 508.3 ☐ 508.4 ☐ 508.5 ☐ 508.6 ☐ 508.7 ☐ 508.8

Mixed Occupancy: ☐ No ☐ Yes Separation: _____ Hr. Exception: _____

☐ Incidental Use Separation (302.1.1)

This separation is not exempt as a Non-Separated Use (see exceptions).

☐ Non-Separated Use (302.3.1)
The required type of construction for the building shall be determined by applying the height and area limitations for each of the applicable occupancies to the entire building. The most restrictive type of construction, so determined, shall apply to the entire building.

☐ Separated Use (302.3.2) - See below for area calculations
For each story, the area of the occupancy shall be such that the sum of the ratios of the actual floor area of each use divided by the allowable floor area for each use shall not exceed 1.

$$\frac{\textit{Actual Area of Occupancy A}}{\textit{Allowable Area of Occupancy A}} + \frac{\textit{Actual Area of Occupancy B}}{\textit{Allowable Area of Occupancy B}} \leq 1$$

_____ + _____ + ... = _____ ≤ 1.00

STORY NO.	DESCRIPTION AND USE	(A) BLDG AREA PER STORY (ACTUAL)	(B) TABLE 503[5] AREA	(C) AREA FOR FRONTAGE INCREASE[1]	(D) AREA FOR SPRINKLER INCREASE[2]	(E) ALLOWABLE AREA OR UNLIMITED[3]	(F) MAXIMUM BUILDING AREA[4]

[1] Frontage area increases from Section 506.2 are computed thus:
a. Perimeter which fronts a public way or open space having 20 feet minimum width = _____ (F)
b. Total Building Perimeter = _____ (P)
c. Ratio (F/P) = _____ (F/P)
d. W = Minimum width of public way = _____ (W)
e. Percent of frontage increase $I_f = 100\,[F/P - 0.25] \times W/30$ = _____ (%)

[2] The sprinkler increase per Section 506.3 is as follows:
a. Multi-story building I_s = 200 percent
b. Single story building I_s = 300 percent

[3] Unlimited area applicable under conditions of Sections Group B, F, M, S, A-4 (507); Group A motion picture (507.9); Malls (402.6); and H-2 aircraft paint hangers (507.7).

[4] Maximum Building Area = total number of stories in the building x E (506.4).

[5] The maximum area of parking garages must comply with 406.3.5. The maximum area of air traffic control towers must comply with 412.1.2.

ALLOWABLE HEIGHT

	ALLOWABLE (TABLE 503)	INCREASE FOR SPRINKLERS	SHOWN ON PLANS	CODE REFERENCE
Type of Construction	Type _____		Type _____	
Building Height in Feet	Feet _____	Feet = H + 20' = _____		
Building Height in Stories	Stories _____	Stories + 1 = _____	Stories	

FIRE PROTECTION REQUIREMENTS

Life Safety Plan Sheet #, if Provided _____

BUILDING ELEMENT	FIRE SEPARATION DISTANCE (FEET)	RATING REQ'D	RATING PROVIDED (W/_____* REDUCTION)	DETAIL # AND SHEET #	DESIGN # FOR RATED ASSEMBLY	DESIGN # FOR RATED PENETRATION	DESIGN # FOR RATED JOINTS
Structural Frame, including columns, girders, trusses							
Bearing Walls							
Exterior							
North							
East							
West							
South							
Interior							
Nonbearing Walls and Partitions Exterior walls							
North							
East							
West							
South							
Interior walls and partitions							
Floor Construction Including supporting beams and joists							
Roof Construction Including supporting beams and joists							
Shaft Enclosures - Exit							
Shaft Enclosures - Other							
Corridor Separation							
Occupancy Separation							
Party/Fire Wall Separation							
Smoke Barrier Separation							
Tenant Separation							
Incidental Use Separation							

* Indicate section number permitting reduction

LIFE SAFETY SYSTEM REQUIREMENTS

Emergency Lighting: ☐ No ☐ Yes
Exit Signs: ☐ No ☐ Yes
Fire Alarm: ☐ No ☐ Yes
Smoke Detection Systems: ☐ No ☐ Yes
Panic Hardware: ☐ No ☐ Yes

EXIT REQUIREMENTS

NUMBER AND ARRANGEMENT OF EXITS

FLOOR, ROOM OR SPACE DESIGNATION	MINIMUM[2] NUMBER OF EXITS		TRAVEL DISTANCE		ARRANGEMENT MEANS OF EGRESS[1,3] (SECTION 1014.2)	
	REQUIRED	SHOWN ON PLANS	ALLOWABLE TRAVEL DISTANCE (TABLE 1015.1)	ACTUAL TRAVEL DISTANCE SHOWN ON PLANS	REQUIRED DISTANCE BETWEEN EXIT DOORS	ACTUAL DISTANCE SHOWN ON PLANS

[1] Corridor dead ends (Section 1016.3)
[2] Single exits (Table 1018.2)
[3] Common Path of Travel (Section 1013.3)

EXIT WIDTH

USE GROUP OR SPACE DESCRIPTION	(a)	(b)		(c)		EXIT WIDTH (in)[2,3,4,5,6]			
	AREA[1] sq. ft.	AREA[1] PER OCCUPANT (TABLE 1003.2.2.2)	CALCULATED OCCUPANT LOAD	EGRESS WIDTH PER OCCUPANT (TABLE 1005.1)		REQUIRED WIDTH (SECTION 1005.1) (a÷b) x c		ACTUAL WIDTH SHOWN ON PLANS	
				STAIR	LEVEL	STAIR	LEVEL	STAIR	LEVEL

[1] See Table 1004.1.2 to determine whether net or gross area is applicable.
See definition "Area, Gross" and "Area, Net" (Section 1002)
[2] Minimum stairway width (Section 1005.1); min. corridor width (Section 1016.2); min. door width (Section 1018.1)
[3] Minimum width of exit passageway (Section 1020.2)
[4] See Section 1004.5 for converging exits.
[5] The loss of one means of egress shall not reduce the available capacity to less than 50 percent of the total required (Section 1005.1)
[6] Assembly occupancies (Section 1024)

STRUCTURAL DESIGN

DESIGN LOADS:

Importance Factors: Wind (I_W) _____
Snow (I_S) _____
Seismic (I_E) _____

Live Loads: Roof _____ psf
Mezzanine _____ psf
Floor _____ psf

Snow Load: _____ psf

Wind Load: Basic Wind Speed _____ mph (ASCE-7-02)
Exposure Category _____
Wind Base Shears (for MWFRS) Vx = _____ Vy = _____

SEISMIC DESIGN CATEGORY A
Compliance with Section 1616.4 only? ☐ Yes ☐ No

SEISMIC DESIGN CATEGORY ☐ **B** ☐ **C** ☐ **D**

Provide the following Seismic Design Parameters:

Seismic Use Group _____
Spectral Response Acceleration S_S_____ %g S_1_____ %g
Site Classification _____ ☐ Field Test ☐ Presumptive ☐ Historical Data
Basic structural system (check one)
_____ Bearing Wall _____ Dual w/Special Moment Frame
_____ Building Frame _____ Dual w/Intermediate R/C or Special Steel
_____ Moment Frame _____ Inverted Pendulum
Seismic base shear V_X = _____ V_Y = _____
Analysis Procedure _____ Simplified _____ Equivalent Lateral Force _____ Modal
Architectural, Mechanical, Components anchored? _____

LATERAL DESIGN CONTROL: Earthquake _____ Wind _____

SOIL BEARING CAPACITIES:
Field Test (provide copy of test report) _____ psf
Presumptive Bearing capacity _____ psf
Pile size, type, and capacity _____

PLUMBING FIXTURE REQUIREMENTS

USE		WATERCLOSETS		URINALS	LAVATORIES		SHOWERS/ TUBS	DRINKING FOUNTAINS	
		MALE	FEMALE		MALE	FEMALE		REGULAR	ACCESSIBLE
	EXISTING								
	NEW								
	REQUIRED								

ACCESSIBLE PARKING

LOT OR PARKING AREA	TOTAL # OF PARKING SPACES		# OF ACCESSIBLE SPACES PROVIDED		TOTAL # ACCESSIBLE PROVIDED
	REQUIRED	PROVIDED	REGULAR WITH 5' ACCESS AISLE	VAN SPACES WITH 8' ACCESS AISLE	
TOTAL					

SPECIAL APPROVALS

Special approval: (Local Jurisdiction, Department of Insurance, OSC, DPI, DFS, ICC, etc., describe below)

_____

_____

_____

ENERGY SUMMARY

ENERGY REQUIREMENTS:
The following data shall be considered minimum and any special attribute required to meet the energy code shall also be provided. Each Designer shall furnish the required portions of the project information for the plan data sheet. If energy cost budget method, state the annual energy cost budget vs allowable annual energy cost budget.

THERMAL ENVELOPE

Method of Compliance:

☐ Prescriptive ☐ Performance ☐ Energy Cost Budget

Roof/ceiling Assembly (each assembly)

- Description of assembly
- U-Value of total assembly
- R-Value of insulation
- Skylights in each assembly
  - U-Value of skylight
  - total square footage of skylights in each assembly

Exterior Walls (each assembly)

- Description of assembly
- U-Value of total assembly
- R-Value of insulation
- Openings (windows or doors with glazing)
  - U-Value of assembly
  - shading coefficient
  - projection factor
  - low e required, if applicable
- Door R-Values

Walls adjacent to unconditioned space (each assembly)

- Description of assembly
- U-Value of total assembly
- R-Value of insulation
- Openings (windows or doors with glazing)
  - U-Value of assembly
  - Low e required, if applicable
- Door R-Values

Walls below grade (each assembly)

- Description of assembly
- U-Value of total assembly
- R-Value of insulation

Floors over unconditioned space (each assembly)

Description of assembly
U-Value of total assembly
R-Value of insulation

Floors slab on grade

Description of assembly
U-Value of total assembly
R-Value of insulation
Horizontal/vertical requirement
slab heated

ELECTRICAL SUMMARY

ELECTRICAL SYSTEM AND EQUIPMENT

Method of Compliance:

☐ Prescriptive ☐ Performance ☐ Energy Cost Budget

Lighting schedule

lamp type required in fixture
number of lamps in fixture
ballast type used in the fixture
number of ballasts in fixture
total wattage per fixture
total interior wattage specified vs allowed
total exterior wattage specified vs allowed

Equipment schedules with motors (not used for mechanical systems)

motor horsepower
number of phases
minimum efficiency
motor type
# of poles

MECHANICAL SUMMARY

MECHANICAL SYSTEMS, SERVICE SYSTEMS AND EQUIPMENT

Method of Compliance

☐ Prescriptive ☐ Energy Cost Budget

Climate Zone _____

Thermal Zone

winter dry bulb
summer dry bulb

Interior design conditions

winter dry bulb
summer dry bulb
relative humidity

Building heating load

Building cooling load

Mechanical Spacing Conditioning System

Unitary
- description of unit
- heating efficiency
- cooling efficiency
- heat output of unit
- cooling output of unit

Boiler
- total boiler output. If oversized, state reason.

Chiller
- total chiller capacity. If oversized, state reason.

List equipment efficiencies

Equipment schedules with motors (mechanical systems)

motor horsepower
number of phases
minimum efficiency
motor type
# of poles

Appendix D
Turning Radius Templates

Longest Vehicle:

Ladder 7

Specifications:

Inside to Inside = 24' 5"

Curb to Curb = 40' 2"

Wall to Wall = 47' 7"

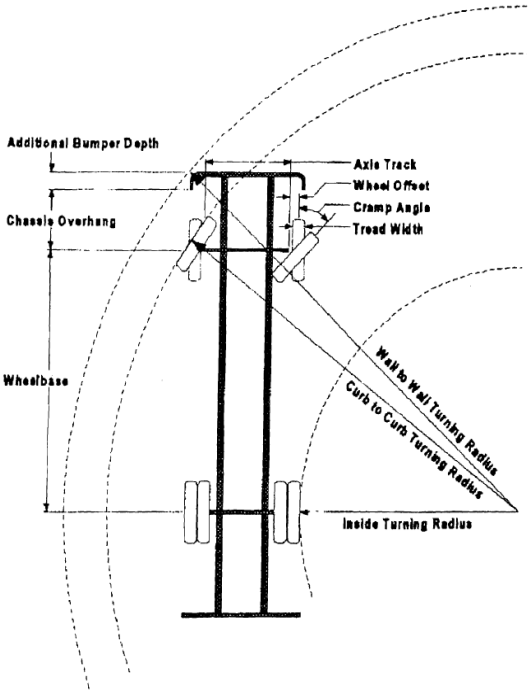

Turning Performance Analysis

11/7/2006

Bid Number: Concord Fire Department
Department: 1399

Chassis: Dash-2000, Chassis, PAP/SkyArm/Midmount
Body: Aerial, Platform 100', Alum Body

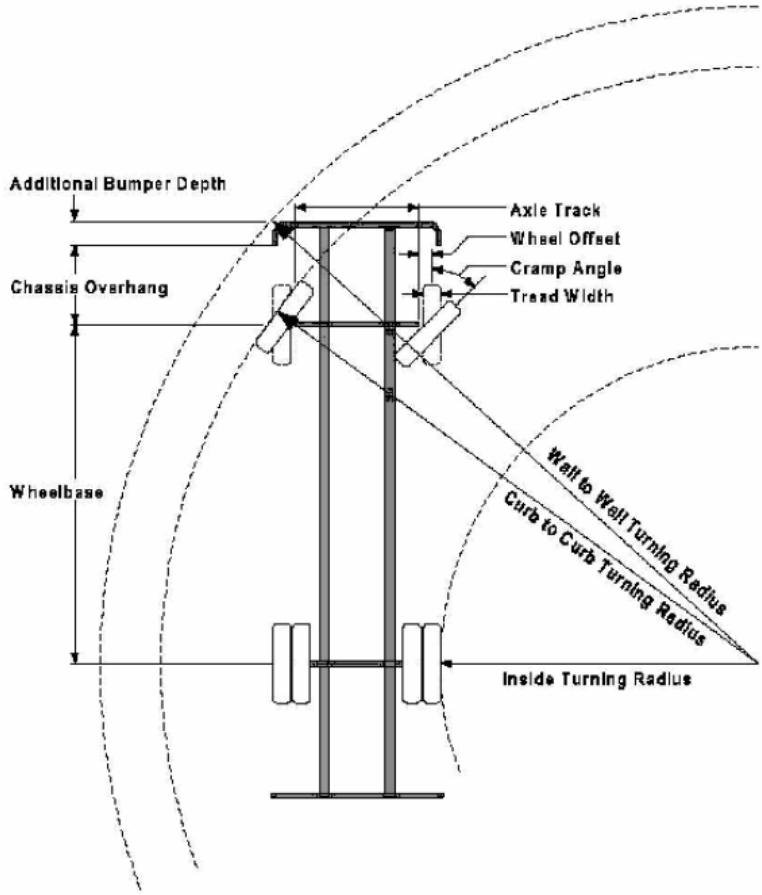

Parameters:

Inside Cramp Angle:	40°
Axle Track:	82.92 in.
Wheel Offset:	5.30 in.
Tread Width:	17.80 in.
Chassis Overhang:	65.99 in.
Additional Bumper Depth:	26.00 in.
Front Overhang:	145.60 in.
Wheelbase:	258.00 in.

Calculated Turning Radii:

Inside Turn:	24 ft. 5 in.
Curb to Curb:	40 ft. 2 in.
Wall to Wall:	47 ft. 7 in.

Comments:

Components	PRIDE #	Description
Bumpers	0022248	Bumper, 26" extended - "All Custom Chassis"
Aerial Devices	0022160	Aerial, 100' Pierce Platform
Wheels, Front	0019618	Wheels, Frt, Alum, Alcoa, 22.50" x 13.00" (425/445)
Axle, Front, Custom	0090913	Axle, Front, Oshkosh TAK-4, Non Drive, 24,000 lb, DLX/Qtm/AXT
Tires, Front	0078245	Tires, Michelin, 445/65R22.50 20 ply XZY 3 tread (24,000 TAK 4)

Notes:

Actual Inside Cramp Angle may be less due to highly specialized options.

Curb to Curb turning radius calculated for a 9.00 inch curb.

Turning Performance Analysis

11/7/2006

Bid Number: Concord Fire Department
Department: 1399

Chassis: Dash-2000, Chassis, PAP/SkyArm/Midmount
Body: Aerial, Platform 100', Alum Body

Definitions:

Inside Cramp Angle — Maximum turning angle of the front inside tire.

Axle Track — King-pin to king-pin distance of the front axle.

Wheel Offset — Offset from the center-line of the wheel to the king-pin.

Tread Width — Width of the tire tread.

Chassis Overhang — Distance from the center-line of the front axle to the front edge of the cab. This does not include the bumper depth.

Additional Bumper Depth — Depth that the bumper assembly adds to the front overhang.

Wheelbase — Distance between the center lines of the vehicle's front and rear axles.

Inside Turning Radius — Radius of the smallest circle around which the vehicle can turn.

Curb to Curb Turning Radius — Radius of the smallest circle inside of which the vehicle's tires can turn. This measurement assumes a curb height of 9 inches.

Wall to Wall Turning Radius — Radius of the smallest circle inside of which the entire vehicle can turn. This measurement takes into account any front overhang due to the chassis, bumper extensions and/or aerial devices.

R = 40'–2"

SCALE
1"=20'

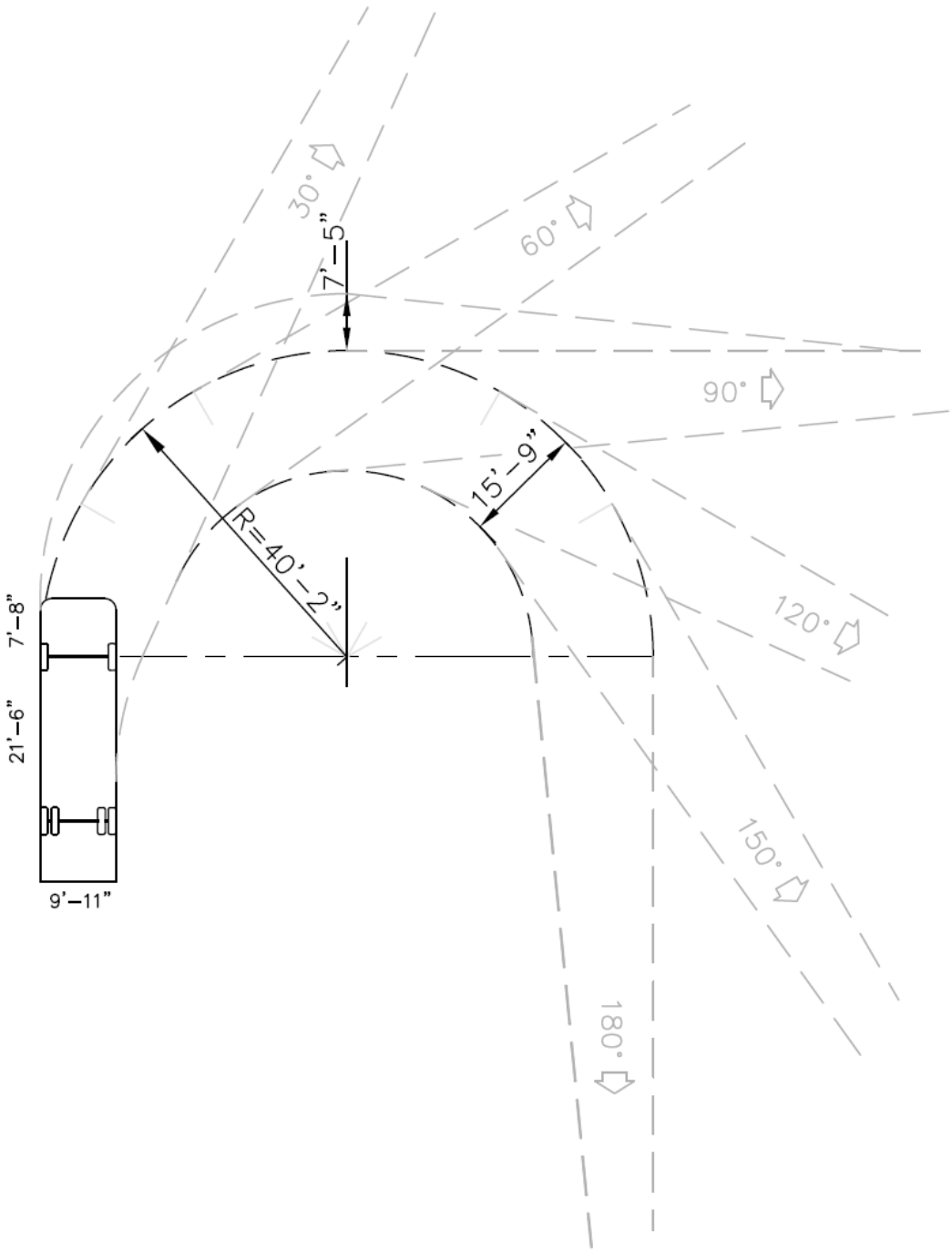

R = 40'–2"

SCALE
1"=30'

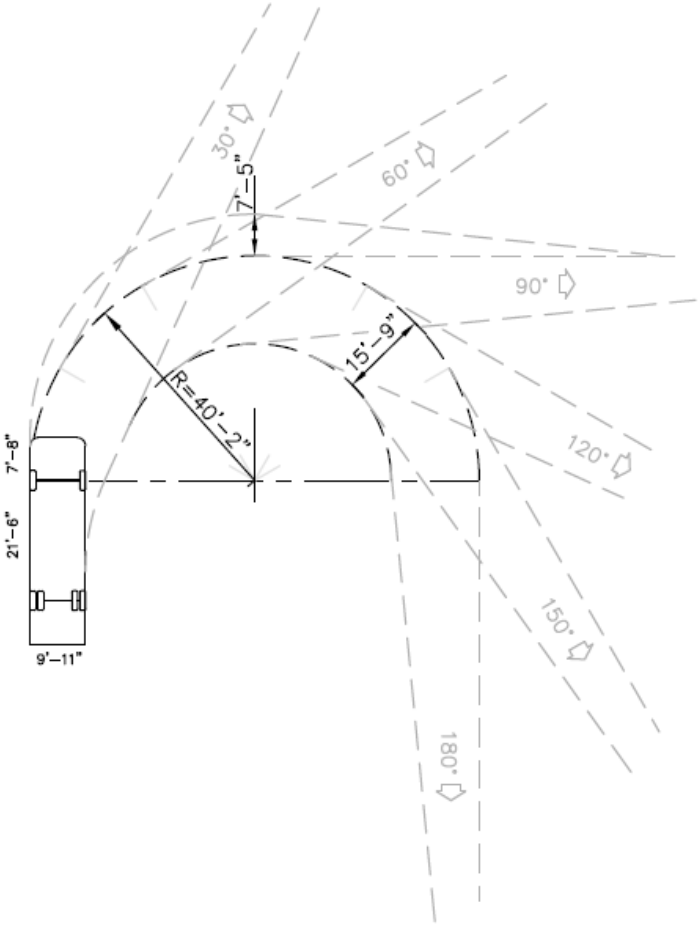

R = 40'–2"

SCALE
1"=40'

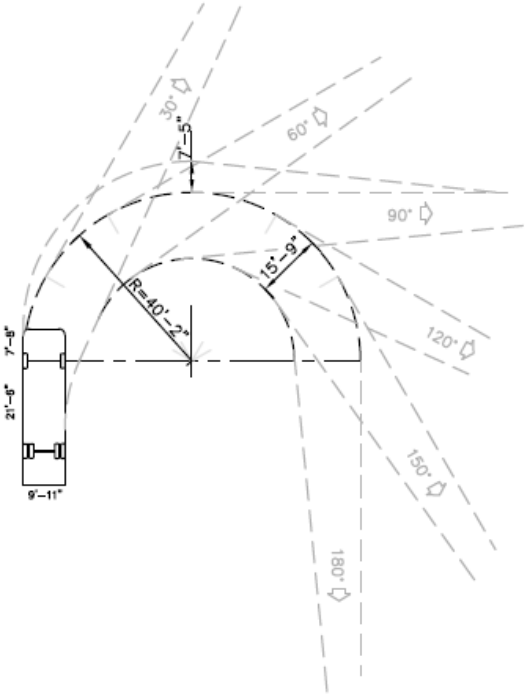

R = 40'-2"

SCALE
1"=50'

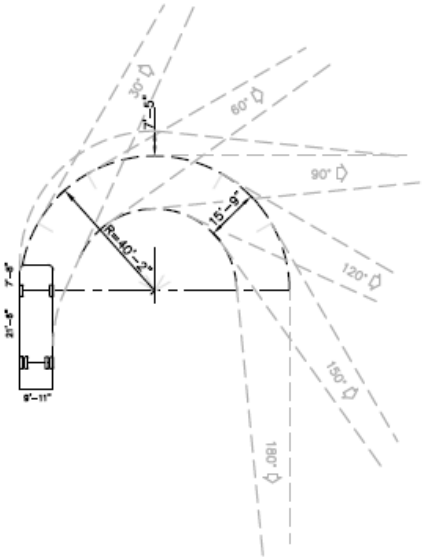

R = 40'-2"

SCALE
1"=60'

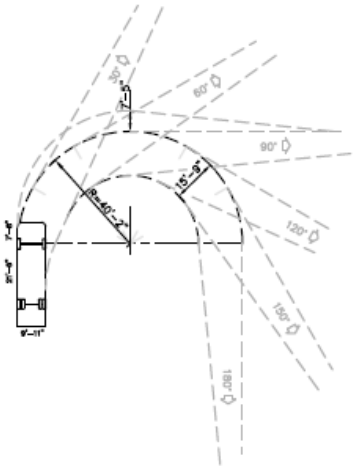

R = 40'-2"

SCALE
1"=80'

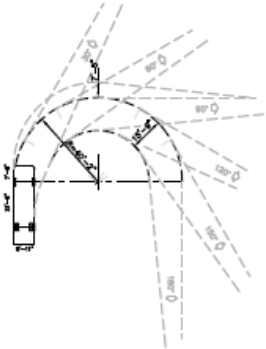

R = 40'-2"

SCALE
1"=100'

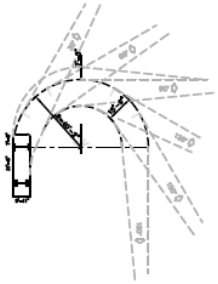

Appendix E

City of Concord
Water Resource Department

Backflow Prevention
And
Cross Contamination
Manual

Concord
NORTH CAROLINA
FIRE
AND
LIFE SAFETY

PO Box 308
Concord, NC 28026