CITY OF CONCORD
CONCORD, NORTH CAROLINA

OLD CHARLOTTE ROAD SIDEWALK EXTENSION
PHASE 1
TRANSPORTATION FUND PROJECT # 8600-5585000

CONSTRUCTION SEQUENCE

1. CONTRACTOR SHALL ENSURE THAT ALL NECESSARY PERMITS HAVE BEEN RECEIVED AND THAT THOSE REQUIRED TO BE DISPLAYED ON-SITE ARE AVAILABLE.

2. CONTRACTOR SHALL HOLD PRE-CONSTRUCTION MEETING AT LEAST ONE 48 HOURS BEFORE THE ACTUAL START OF CONSTRUCTION.

3. CONTRACTOR SHALL CONTACT NORTH CAROLINA ONE-CALL CENTER @ 811 AND ALL ENTITIES HAVING BURIED UTILITIES AT LEAST 72 HOURS PRIOR TO DIGGING OR AS DIRECTED AT THE PRE-CONSTRUCTION MEETING.

4. CONTRACTOR SHALL MAINTAIN TRAFFIC AND SAFETY CONTROL MEASURES AT ALL TIMES ON THE PROJECT. (SEE TRAFFIC CONTROL, "EXHIBIT A" OF THE BIDDING DOCUMENTS.)

5. CONTRACTOR SHALL INSTALL TEMPORARY CONSTRUCTION ENTRANCES (IF ANY) AT EACH POINT OF ACCESS TO STORAGE AND CONSTRUCTION AREAS.

6. SEDIMENT AND EROSION CONTROL MEASURES SHALL BE INSTALLED IN ACCORDANCE WITH PLANS AND BEFORE STARTING WORK.

7. CONTRACTOR SHALL CLEAR RIGHT-OF-WAY IF NECESSARY.

8. STOCKPILE RIP-RAP ON SITE AND INSTALL ALL OTHER EROSION CONTROL MEASURES WHERE THE WORK IS OCCURRING. THE CONTRACTOR SHALL NOT INSTALL EROSION CONTROL MEASURES IN AREAS WHERE THE WORK WILL NOT OCCUR FOR SOME TIME. ADDITIONAL EROSION CONTROL MEASURES MAY BE REQUIRED BY THE TRANSPORTATION DIRECTOR OR HIS DESIGNATED REPRESENTATIVE OR UPON RECOMMENDATION OF NC DENR PERSONNEL AS CONDITIONS WARRANT.

9. IN AREAS WHERE IT IS NOT FEASIBLE TO INSTALL EROSION CONTROL DEVICES, ALL DISTURBED AREAS MUST BE SEEDED AND MULCHED BY THE CONTRACTOR WITHIN THREE DAYS OF INITIAL DISTURBANCE. TEMPORARY SEEDING SHALL BE REQUIRED ON ALL OTHER AREAS TO BE DISTURBED FOR A PERIOD OF 10 DAYS OR LONGER.

10. UPON COMPLETION OF THE INSTALLATION AND WITH APPROVAL OF NC DENR-DLR, IF REQUIRED, ALL EROSION CONTROL DEVICES EXCEPT FOR GREEN/STREAM BANK STABILIZATION SHALL BE REMOVED AND DISPOSED OF IN AN ACCEPTABLE MANNER. EACH SECTION SHALL BE SEEDED AT EARLIEST POSSIBLE DATE AFTER INSTALLATION OF PIPE, STRUCTURE, OR ACCESS.

11. ONCE GROUND COVER IS FIRMLY ESTABLISHED, ALL TEMPORARY EROSION CONTROL MEASURES SHALL BE REMOVED WITH THE APPROVAL OF NC DENR-DLR.

12. CONTRACTOR SHALL COORDINATE ALL WATER SYSTEM AND WASTEWATER TESTING WITH THE CITY ENGINEERING DEPARTMENT'S CONSTRUCTION ADMINISTRATOR AT LEAST 24 HOURS IN ADVANCE OF SUCH WORK. NOTIFY THE RESPONSE AREA FIRE DEPARTMENT IF EXISTING SYSTEM VALVES NEED TO BE SHUT OFF IN THE COURSE OF THE WORK.

13. CONTRACTOR SHALL REFERENCE SPECIAL CONDITIONS FOR JOB SEQUENCE AND OTHER DIRECTIONS, IF ANY. CONTRACTOR SHALL COORDINATE CONSTRUCTION ACTIVITY WITH THE CITY.

GENERAL NOTES

1. ALL MATERIALS, EQUIPMENT, LABOR, AND WORKMANSHIP IS TO BE IN ACCORDANCE WITH AND SUBJECT TO THE CITY OF CONCORD TECHNICAL STANDARDS MANUAL, THE CITY OF CONCORD'S ORDINANCES, POLICIES, AND STANDARD SPECIFICATIONS, NCDOT STANDARD SPECIFICATIONS AND NCDOT STANDARD DRAWINGS, WATER AND SEWER AUTHORITY OF CABARRUS COUNTY'S STANDARD SPECIFICATIONS, AND THE NORTH CAROLINA ADMINISTRATIVE CODE FOR WASTEWATER COLLECTION AND WATER DISTRIBUTION SYSTEMS. IN THE EVENT OF CONFLICT BETWEEN NCDOT STANDARD SPECIFICATIONS AND NCDOT STANDARD DRAWINGS, THE WATER AND SEWER AUTHORITY OF CABARRUS COUNTY'S STANDARD SPECIFICATION, THE CITY OF CONCORD'S ORDINANCES, POLICIES, AND STANDARD SPECIFICATIONS, AND THE NORTH CAROLINA ADMINISTRATIVE CODE. THE MORE RESTRICTIVE REQUIREMENTS SHALL APPLY.

2. ALL SEDIMENT AND EROSION CONTROL MEASURES SHALL CONFORM TO THE LATEST STANDARDS OF THE N.C. SEDIMENTATION POLLUTION CONTROL ACT AND APPLICABLE LOCAL AND FEDERAL REQUIREMENTS.

3. CONTRACTOR SHALL NOTIFY THE TRANSPORTATION DIRECTOR OR HIS DESIGNATED REPRESENTATIVE AT LEAST 48 HOURS IN ADVANCE OF BEGINNING WORK.

4. INDIVIDUAL WATER, GAS, SEWER, TELEPHONE, AND CABLE SERVICES MAY OR MAY NOT BE SHOWN ON THE PLANS. CONTRACTOR TO CONTACT APPROPRIATE AGENCY FOR FIELD LOCATIONS.

5. CITY OF CONCORD ELECTRIC, TRANSPORTATION SIGNAL, WATER, AND SEWER DEPARTMENT PERSONNEL WILL ASSIST THE CONTRACTOR IN LOCATING ALL CITY OF CONCORD SERVICES LINES.

6. IF MAILBOX PULL-OFF AREAS ARE DISTURBED, CRUSHED STONE STABILIZER SHALL BE PLACED WITH SUFFICIENT LENGTH TO ACCOMMODATE VEHICULAR TRAFFIC. THESE AREAS SHALL BE MAINTAINED FOR THE ONE-YEAR WARRANTY PERIOD. THE COST OF THESE ITEMS SHALL BE INCLUDED IN THE COST OF SEEDING AND MULCHING.

7. THIS PROJECT IS NOT SUBJECT TO 100 YEAR FLOOD.

8. FIRE HYDRANT EXTENSIONS, IF NEEDED, SHALL BE INCLUDED IN THE COST OF THE HYDRANT RE-INSTALLATION.

9. GATE OR BUTTERFLY VALVES, BLOW-OFFS, AND FIRE HYDRANTS MAY BE FIELD ADJUSTED 50 FEET IN EITHER DIRECTION WITH THE PERMISSION OF THE ENGINEERING AND WATER RESOURCES DEPARTMENTS.

10. DUST CONTROL MEASURES SHALL BE USED TO MITIGATE AND CONTROL CONCRETE DUST FROM SAW CUTTING OPERATIONS. AT THE END OF EACH WORKDAY, THE CONTRACTOR SHALL CLEAN THE SITE OF ANY DEBRIS AND WASTE MATERIALS (SUCH AS MUD ON THE STREETS OR SIDEWALK) THAT RESULT FROM THE WORK AND SECURE THE WORK FROM ANY HAZARDOUS CONDITION.

RIGHT-OF-WAY NOTES

1. RIGHT-OF-WAY LINES AND PROPERTY LINES ARE SHOWN ON THE DESIGN DRAWINGS AND ARE FOR REFERENCE ONLY. FOR EXACT LOCATIONS REFER TO THE SURVEY PLATS BY THE CITY OF CONCORD'S CONSULTING REGISTERED LAND SURVEYOR OR BY THE CITY SURVEYOR.

TRAFFIC CONTROL

1. THE CONTRACTOR SHALL BE RESPONSIBLE AT ALL TIMES FOR WORK ZONE TRAFFIC SAFETY AND CONTROL.

2. ALL WORK ZONE TRAFFIC CONTROL DEVICES AND OPERATIONS USED ON STREET AND HIGHWAY CONSTRUCTION, MAINTENANCE, UTILITY OR INCIDENT MANAGEMENT SHALL CONFORM TO THE APPLICABLE SPECIFICATIONS IN THE LATEST EDITION OF THE MANUAL ON UNIFORM TRAFFIC CONTROL DEVICES FOR STREETS AND HIGHWAYS (MUTCD).

3. ALL TRAFFIC/SAFETY CONTROL DEVICES SHALL BE IN GOOD REPAIR AND SHALL BE POSITIONED AT ALL TIMES IN THE APPROPRIATE LOCATIONS FOR THE WORK OPERATION. THE CONTRACTOR SHALL CAREFULLY MONITOR SITE CONDITIONS SUCH AS LIGHT, WEATHER, TRAFFIC VOLUME, ETC. TO ENSURE THAT ALL TRAFFIC/SAFETY CONTROL MEASURES ARE OPERATING EFFECTIVELY.

4. THE CONTRACTOR SHALL PREPARE A PROPOSAL ON THE TRAFFIC CONTROL OPERATIONS AND PRESENT THEM TO THE CITY OF CONCORD'S TRANSPORTATION DEPARTMENT @ 920-5362 AT LEAST 48 HOURS BEFORE BEGINNING WORK.

VICINITY MAP
SCALE: NTS

FOR PRE-QUOTE CONFERENCE ONLY

LEGEND

- PROPOSED SEWER LINE, MANHOLE & CLEAN-OUT
- PROPOSED WATER LINE
- PROPOSED FIRE HYDRANT
- PROPOSED WATER VALVE
- PROPOSED BLOW-OFF
- SEDIMENT FENCING
- DA-GLO ORANGE PERSONNEL FENCING
- PROPOSED ENCASEMENT
- EXISTING SEWER AND MANHOLE
- EXISTING SEWER FORCE MAIN
- EXISTING WATER LINE
- EXISTING GAS LINE
- EXISTING TELEPHONE (OVERHEAD OR UNDERGROUND)
- EXISTING ELECTRIC (OVERHEAD OR UNDERGROUND)
- PROPERTY LINE AND IRON PIN
- TEMPORARY CONSTRUCTION EASEMENT
- RIGHT OF WAY/PERMANENT EASEMENT
- WATERWAY/DITCH LINE
- EXISTING BARBED WIRE FENCE
- EXISTING WOVEN WIRE FENCE
- EXISTING CHAIN LINK FENCE
- TREE/WOODS LINE
- EXISTING FIRE HYDRANT
- EXISTING WATER VALVE
- EXISTING WATER METER
- EXISTING WELL
- EXISTING TELEPHONE/POWER RISER
- EXISTING LIGHT POLE
- EXISTING POWER POLE/GUY WIRE
- EXISTING STREET OR LOCATION SIGN
- EXISTING CONCRETE R/W MONUMENT
- BENCHMARK/TEMPORARY BENCHMARK
- EXISTING RCP OR CMP
- EXISTING MAILBOX
- DUST CONTROL

Concord NORTH CAROLINA High Performance Living

PREPARED BY
TRANSPORTATION
DEPARTMENT
CITY OF CONCORD
P.O. BOX 308
CONCORD N.C. 28026
(704) 920-5362

NOT FOR CONSTRUCTION

Engineer's Seal

DRAWING INDEX

COVER SHEET
SHEET 2 PLAN AND PROFILE
SHEET 3 PLAN AND PROFILE
SHEET 4 DETAILS
SHEET 5 EROSION CONTROL

REV. #	DATE	DESCRIPTION	BY

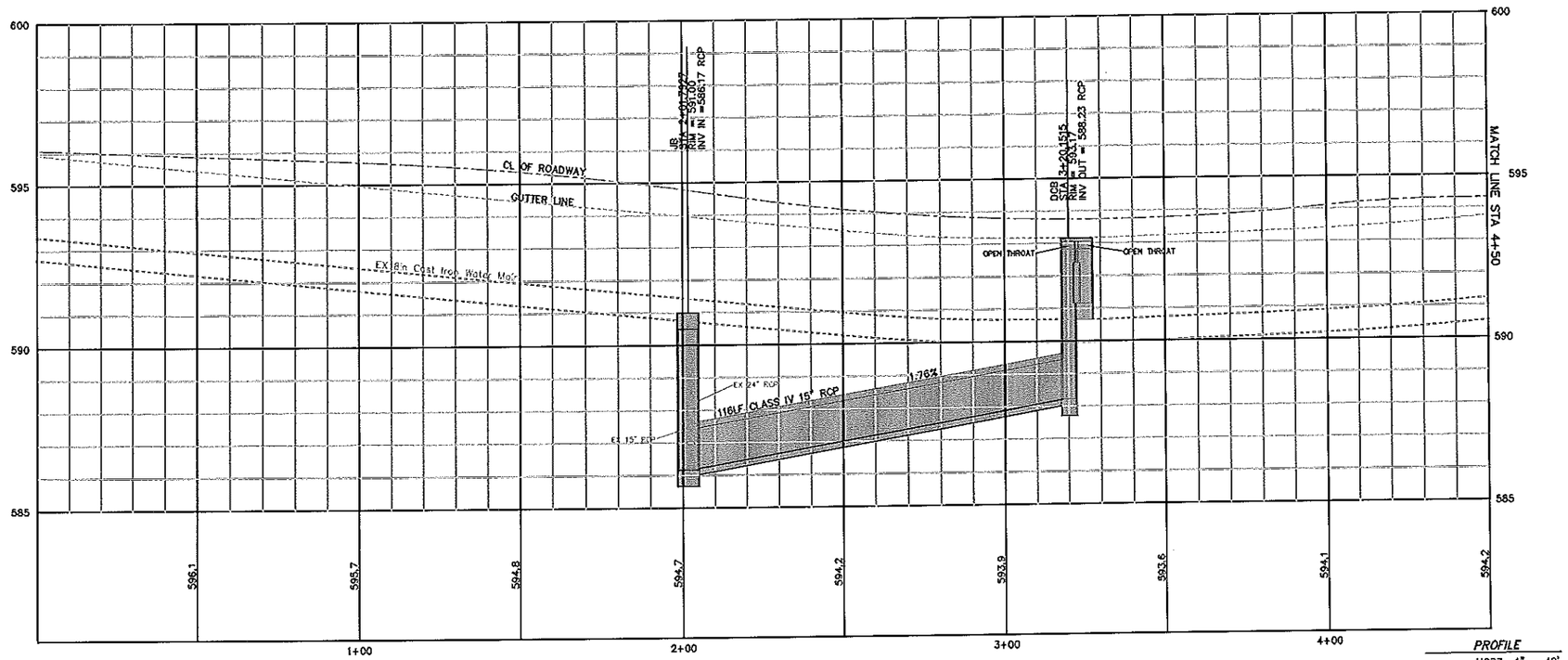

PROFILE

SCALE: HORZ: 1" = 40'
VERT: 1" = 4'

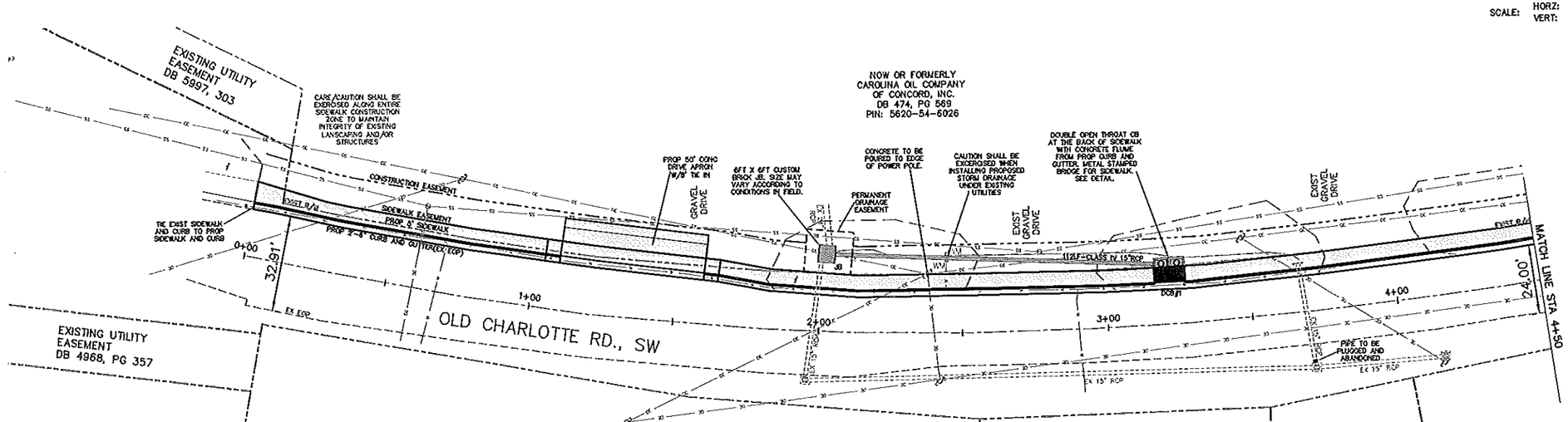

PLAN

SCALE: 1" = 20'

Concord NORTH CAROLINA High Performance Living

PREPARED BY
TRANSPORTATION DEPARTMENT
CITY OF CONCORD
P.O. BOX 308
CONCORD N.C. 28026
(704) 920-5362

NOT FOR CONSTRUCTION

OLD CHARLOTTE ROAD SIDEWALK
PHASE 1
PLAN & PROFILE
PROJECT #: 8600-5585000

REV. #	DATE	DESCRIPTION	BY

DESIGNED BY: PG
DRAWN BY: JNS
CHECKED BY: JKW
SCALE: AS SHOWN
DATE: 11/29/12
PROJECT NUMBER:
SHEET: 2 OF: 5

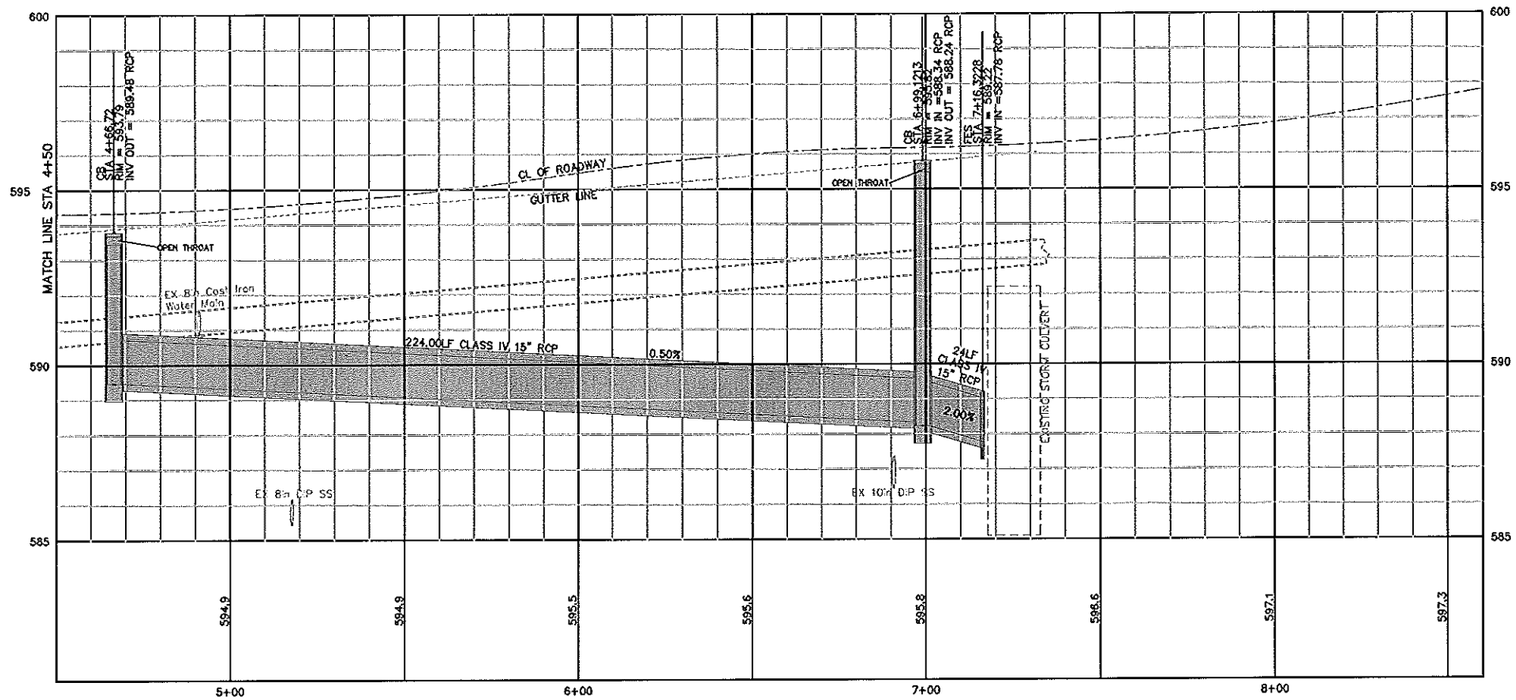

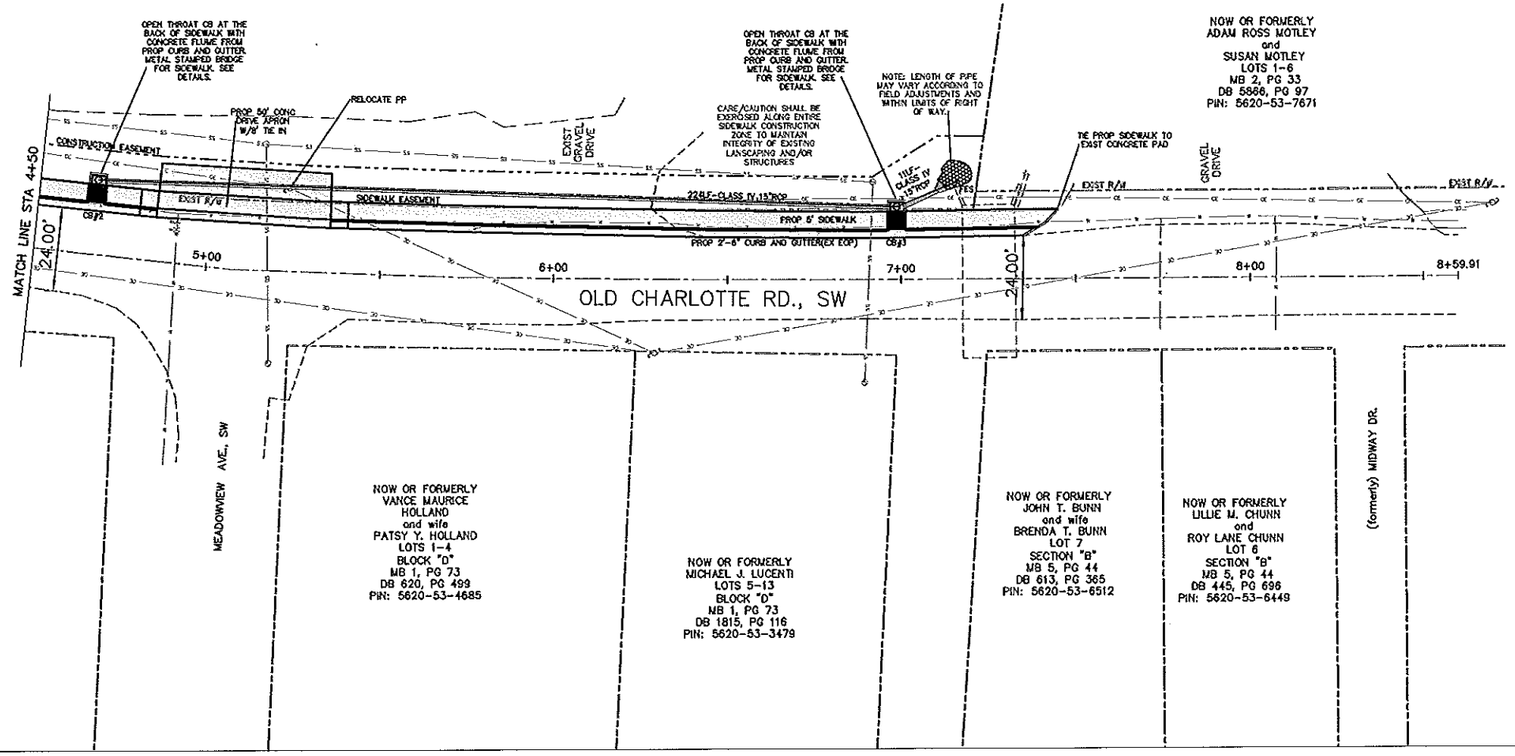

PROFILE

SCALE: HORZ: 1" = 40'
VERT: 1" = 4'

PLAN

SCALE: 1" = 20'

Concord NORTH CAROLINA High Performance Living

PREPARED BY
TRANSPORTATION DEPARTMENT
CITY OF CONCORD
P.O. BOX 308
CONCORD N.C. 28026
(704) 920-5362

NOT FOR CONSTRUCTION

OLD CHARLOTTE ROAD SIDEWALK
PHASE 1
PLAN & PROFILE
PROJECT #: 8600-5585000

REV. #	DATE	DESCRIPTION	BY

DESIGNED BY: PG
DRAWN BY: JNS
CHECKED BY: JKW
SCALE: AS SHOWN
DATE: 11/29/12
PROJECT NUMBER:
SHEET: 3 OF: 5

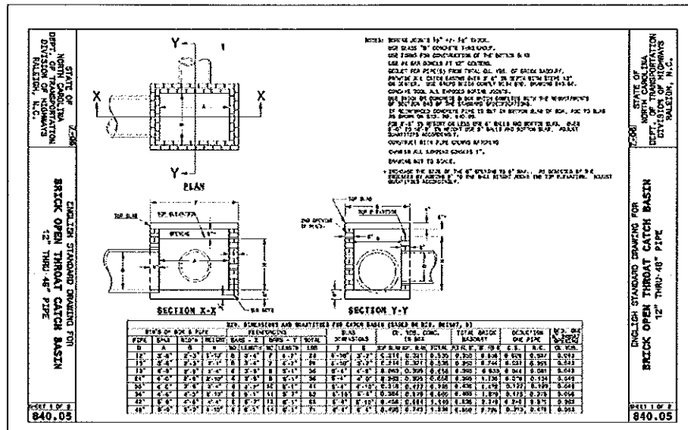

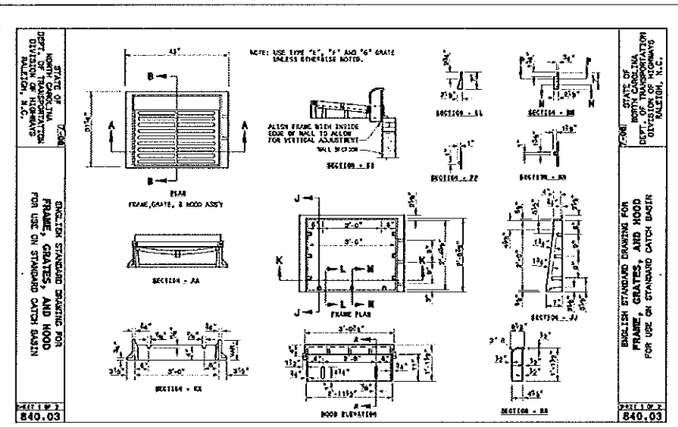

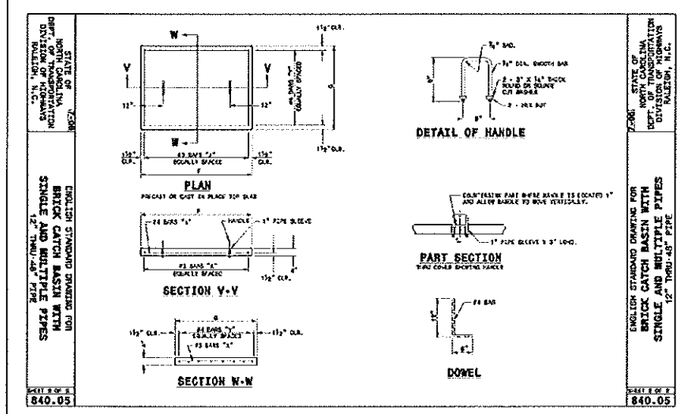

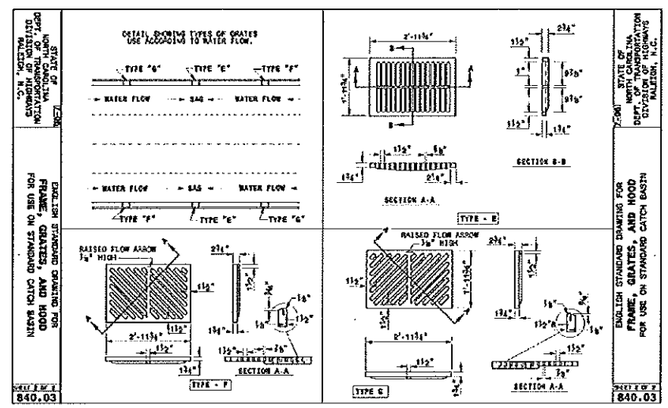

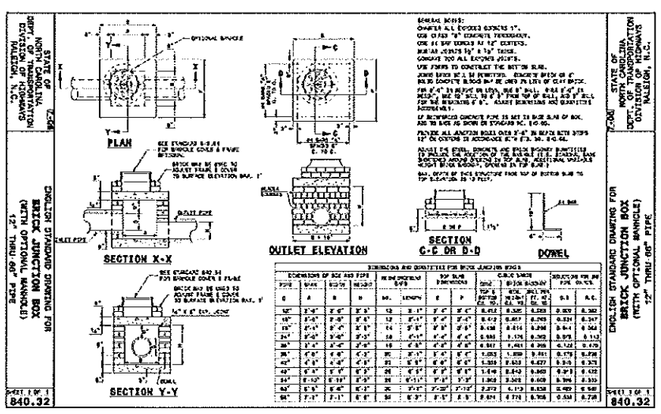

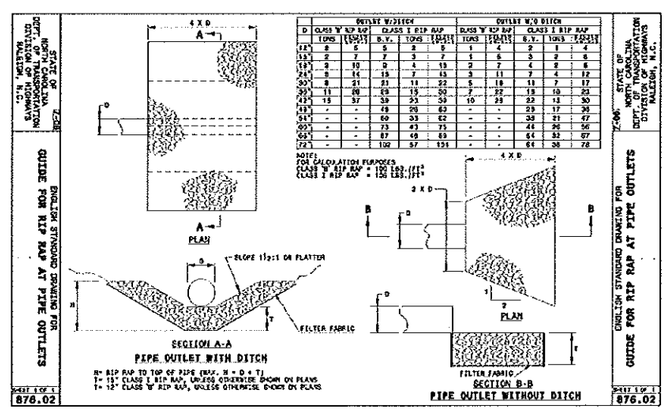

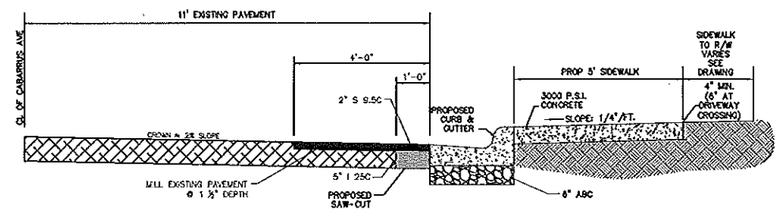

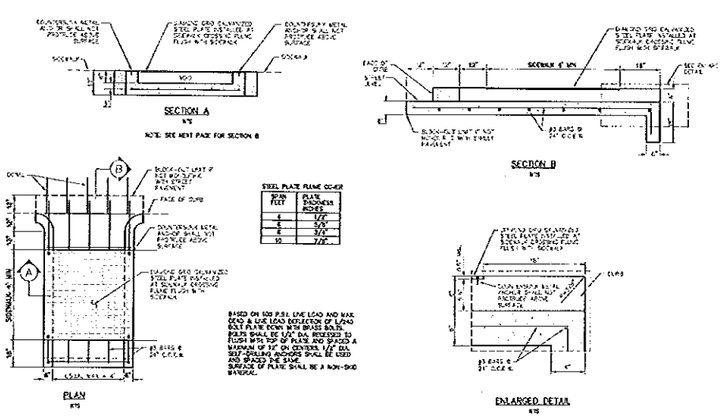

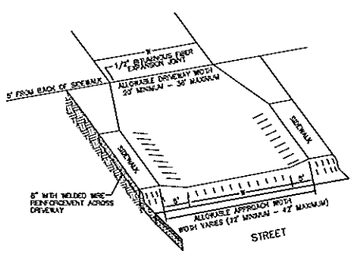

COMMERCIAL TWO-WAY TYPICAL WALK AND DRIVEWAY APPROACH DESIGN
NOT TO SCALE

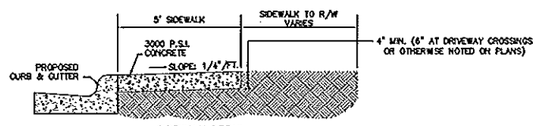

SIDEWALK DETAIL
NOT TO SCALE

SIDEWALK SHALL:

- HAVE A MINIMUM OF FIVE (5) FEET IN WIDTH;
- BE CONSTRUCTED OF NOT LESS THAN THREE THOUSAND (3,000) PSI CONCRETE;
- BE A MINIMUM FOUR (4) INCHES THICK, EXCEPT THAT WHERE A SIDEWALK CROSSES A DRIVEWAY, IT SHALL BE SIX (6) INCHES THICK; AND
- SHALL BE CONSTRUCTED ON AN ADEQUATELY COMPACTED AND PROPERLY GRADED BASE.
- SHALL HAVE A LATERAL SLOPE OF ONE-QUARTER (1/4) INCH PER FOOT TOWARD THE STREET.
- SHALL BE STEEL TROWELLED AND LIGHT BROOM FINISHED AND CURED PROPERLY. TOOLED JOINTS SHALL BE PROVIDED AT INTERVALS OF NOT MORE THAN FIVE (5) FEET AND EXPANSION JOINTS AT INTERVALS OF NOT MORE THAN FORTY (40) FEET.

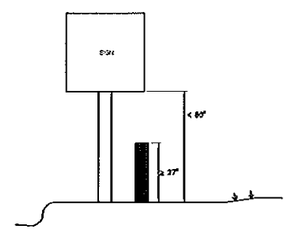

NOTES:

- IF SIGNS/POLES REMAIN IN SIDEWALK AND A PROTRUDING OBJECT IS 80" HIGH OR LONGER, A BARRIER MUST EXIST (27" MIN. HIGH).
- SIDEWALK WIDTH MAY BE REDUCED AROUND SIGN TO 36" MIDAC.

SIDEWALK BARRIER DETAIL
NOT TO SCALE

Concord NORTH CAROLINA High Performance Living

PREPARED BY
TRANSPORTATION
DEPARTMENT
CITY OF CONCORD
P.O. BOX 308
CONCORD N.C. 28026
(704) 920-5362

NOT FOR CONSTRUCTION

OLD CHARLOTTE ROAD SIDEWALK EXTENSION
PHASE 1
PROJECT # : 8600-5585000
DETAILS

REV. #	DATE	DESCRIPTION	BY

DESIGNED BY: JKW
DRAWN BY: JNS
CHECKED BY: JKW
SCALE: NONE
DATE: 11/29/12
PROJECT NUMBER:
SHEET: 4 OF: 5

TEMPORARY DIVERSION DITCH
CONSTRUCTION AND MAINTENANCE

1. REMOVE AND PROPERLY DISPOSE OF ALL TREES, BRUSH, STUMPS, AND OTHER OBJECTIONABLE MATERIAL.
2. ENSURE THAT THE MINIMUM CROSS SECTION MEETS ALL DESIGN REQUIREMENTS.
3. ENSURE THAT THE TOP OF THE DIKE IS NOT LOWER AT ANY POINT THAN THE DESIGN ELEVATION PLUS THE SPECIFIED SETTLEMENT.
4. PROVIDE SUFFICIENT ROOM AROUND DIVERSIONS TO PERMIT MACHINE REGRADING AND CLEANOUT.
5. VEGETATE THE RIDGE IMMEDIATELY AFTER CONSTRUCTION, UNLESS IT WILL REMAIN IN PLACE LESS THAN 30 WORKING DAYS.
6. INSPECT TEMPORARY DIVERSIONS ONCE A WEEK AND AFTER EVERY RAINFALL. IMMEDIATELY REMOVE SEDIMENT FROM THE FLOW AREA AND REPAIR ANY DAMAGE. WHEN CONSTRUCTION AREA IS PERMANENTLY STABILIZED, REMOVE RIDGE AND CHANNEL AND BLEND TO NATURAL GROUND LEVEL AND APPROPRIATELY STABILIZE.

REFERENCE DETAIL BELOW

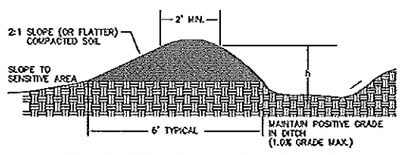

TEMPORARY EARTHEN DIVERSION DIKE WITH TRAPEZOIDAL DITCH

GRADES OF TEMPORARY DIVERSION DITCHES TO FOLLOW NATURAL SLOPE OF GROUND.

* PLANTED VEGETATIVE COVER SHALL BE WET AREAS SPECIES.

TEMPORARY DROP INLET PROTECTION

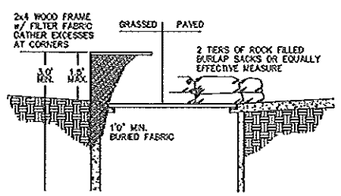

MAINTENANCE: INSPECT AFTER EACH RAIN AND REMOVE SEDIMENT AS NECESSARY

CHECK DAM (TEMPORARY)
CONSTRUCTION AND MAINTENANCE

1. PLACE STONES (2" TO 15") ON FILTER FABRIC WHERE SPECIFIED ON THE CONTRACT DRAWINGS.
2. CONSTRUCT TEMPORARY CHECK DAM AS SHOWN IN THE DETAIL.
3. SET SPACING BETWEEN DAMS TO ASSURE THAT THE ELEVATION AT THE TOP OF THE LOWER DAM IS THE SAME AS THE TOE ELEVATION OF THE UPPER DAM.
4. ENSURE PROTECTION OF THE CHANNEL BELOW THE LOWEST DAM FROM OVERFLOW.
5. ENSURE CHANNEL REACH ABOVE THE MOST UPSTREAM DAM IS STABLE.
6. CHECK FOR STONE BLOCKAGE AFTER EVENTS OF RAIN AT CULVERTS AND STORM DRAIN ENTRANCES.
7. INSPECT CHANNELS AND DAMS AFTER EACH RUNOFF EVENT. CLEANOUT AND SPREAD SEDIMENT IF DIRECTED BY INSPECTOR.

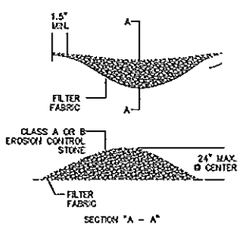

SECTION "A - A"

HALF-RING INLET PROTECTION

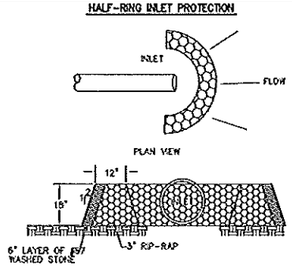

TEMPORARY STONE INLET PROTECTION CONSTRUCTED FROM 3" RIP-RAP WITH 2:1 SIDE SLOPES AT A DEPTH OF 1.5' WITH A 6" LAYER OF #57 WASHED STONE ON THE SIDE AWAY FROM THE INLET.

SEDIMENT FENCE
CONSTRUCTION AND MAINTENANCE

1. CONSTRUCT THE SEDIMENT BARRIER USING A SYNTHETIC FILTER FABRIC OF AT LEAST 95% BY WEIGHT OF POLYOLEFINS OR POLYESTER, WHICH IS CERTIFIED BY THE MANUFACTURER OR SUPPLIER AS CONFORMING TO THE REQUIREMENTS IN ASTM D 6461. SYNTHETIC FILTER FABRIC SHOULD CONTAIN ULTRAVIOLET RAY INHIBITORS AND STABILIZERS TO PROVIDE A MINIMUM OF 6 MONTHS OF EXPECTED USABLE CONSTRUCTION LIFE AT A TEMPERATURE RANGE OF 0 TO 120 F.
2. ENSURE THAT POSTS FOR SEDIMENT FENCES ARE 1.33 LB/LF STEEL WITH MINIMUM LENGTH OF 5 FEET. MAKE SURE THAT STEEL POSTS HAVE PROJECTIONS TO FACILITATE FASTENING THE FABRIC.
3. ENSURE THAT THE HEIGHT OF THE SEDIMENT FENCE DOES NOT EXCEED 24 INCHES ABOVE THE GROUND SURFACE. [HIGHER FENCES MAY IMPOUND VOLUMES OF WATER SUFFICIENT TO CAUSE FAILURE OF THE STRUCTURE.]
4. CONSTRUCT THE FILTER FABRIC FROM A CONTINUOUS ROLL CUT TO THE LENGTH OF THE BARRIER TO AVOID JOINTS. WHEN JOINTS ARE NECESSARY, SECURELY FASTEN THE FILTER CLOTH ONLY AT A SUPPORT POST WITH 4 FEET MINIMUM OVERLAP TO THE NEXT POST.
5. SUPPORT STANDARD STRENGTH FILTER FABRIC BY WIRE MESH FASTENED SECURELY TO THE UPSLOPE SIDE OF THE POSTS. EXTEND THE WIRE MESH SUPPORT TO THE BOTTOM OF THE TRENCH. FASTEN THE WIRE REINFORCEMENT, THEN FABRIC ON THE UPSLOPE SIDE OF THE FENCE POST. WIRE OR PLASTIC ZIP TIES SHOULD HAVE A MINIMUM 50 POUND TENSILE STRENGTH.
6. WHEN A WIRE MESH SUPPORT POST IS USED, SPACE POSTS AT A MAXIMUM OF 8 FEET APART. SUPPORT POST SHOULD BE DRIVEN SECURELY INTO THE GROUND TO A MINIMUM OF 24 INCHES.
7. EXTRA-STRENGTH FILTER FABRIC WITH 6-FOOT POST SPACING DOES NOT REQUIRE A WIRE MESH SUPPORT FENCE. WIRE THE FILTER FABRIC DIRECTLY TO THE POSTS.
8. EXCAVATE A TRENCH APPROXIMATELY 4 INCHES WIDE AND 8 INCHES DEEP ALONG THE PROPOSED LINE OF POSTS AND UPSLOPE FROM THE BARRIER. PLACE 12 INCHES OF THE FABRIC ALONG THE BOTTOM AND SIDE OF THE TRENCH. BACKFILL THE TRENCH WITH SOIL PLACED OVER THE FILTER FABRIC AND COMPACT. THOROUGH COMPACTION OF THE BACKFILL IS CRITICAL TO SILT FENCE PERFORMANCE.
9. STEEL POSTS TO BE USED ONLY. WOODEN POSTS NOT ALLOWED.
10. DO NOT ATTACH FILTER FABRIC TO EXISTING TREES.
11. INSPECT STRUCTURE EACH WEEK AND AFTER SIGNIFICANT RAINFALL. MAKE REPAIRS IMMEDIATELY. REPLACE BURLAP EVERY 60 DAYS. SEDIMENT IS TO BE DISPOSED OF PROPERLY. WHEN CONSTRUCTION AREA HAS BEEN PERMANENTLY STABILIZED, REMOVE STRUCTURE AND UNSTABLE SEDIMENT, SMOOTH, BLEND, AND STABILIZE AREA.

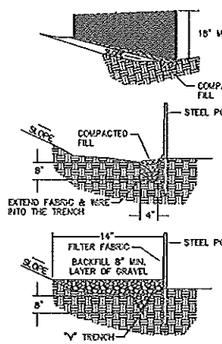

RIP-RAP PLACEMENT

1. EACH RIP-RAP PLACEMENT SHALL BE BEDDED IN EITHER A 6-INCH LAYER OF STABILIZATION STONE OR A NON-BIODEGRADABLE FILTER FABRIC. PLACEMENT OF RIP-RAP SHALL IMMEDIATELY FOLLOW THE PLACEMENT OF THIS LAYER. KEEP WORK TO A MINIMUM AND FORM A DENSE WEATHER-GRADED MASS OF STONE. DO NOT DISLODGE THE UNDERLYING BASE OF FILTER WHEN PLACING STONE. COST OF THE STONE BASE OR FILTER SHALL BE INCLUDED IN THE COST OF THE PLACING OF RIP-RAP.
2. MAXIMUM STONE SIZE WHEN USING 6-INCH d50 WILL BE 12 INCHES AND THE MAXIMUM THICKNESS OF THE RIP-RAP LAYER SHALL BE 18 INCHES.
3. MAXIMUM SLOPE OF THE CHANNEL BANK SHALL NOT EXCEED 2.0 HORIZONTAL TO 1.0 VERTICAL. FINISHED GRADE OF THE RIP-RAP IS TO BLEND WITH THE SURROUNDING AREA.
4. INSPECT RIP-RAP PERIODICALLY FOR SCOUR OR DISLODGED STONES (ESPECIALLY AFTER SEVERE STORMS) AND WEED/BRUSH GROWTH.

REFERENCE DETAIL BELOW

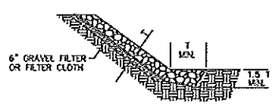

THE DIAMETER OF THE LARGEST STONE SHALL EXCEED 1.5 TIMES THE SIZE OF THE RIP-RAP. (12" FOR 8" d50) MINIMUM THICKNESS (T) SHOULD BE 1.5 TIMES THE MAXIMUM STONE DIAMETER, BUT IN NO CASE LESS THAN 6".

DUST CONTROL

1. CONTRACTOR SHALL CONTROL DUST FROM EQUIPMENT USE OF UNPAVED ROADS BY SPRINKLING WITH WATER UNTIL THE SURFACE IS WET.
2. DUST CONTROL MEASURE(S) SHALL BE USED THROUGH DRY WEATHER UNTIL ALL DISTURBED AREAS HAVE BEEN STABILIZED.

ENVIRONMENTAL PROTECTION

SEDIMENTATION AND EROSION CONTROL

ALL EXISTING SENSITIVE LAND FEATURES AND STRUCTURES SHALL BE PROTECTED FROM EROSION AND SEDIMENTATION. ITEMS TO BE PROTECTED SHALL INCLUDE, BUT ARE NOT LIMITED TO, ALL DOWNSTREAM PROPERTY, NATURAL WATERWAYS, STREAMS, WETLANDS, YARDS, LAKES AND PONDS, CATCH BASINS, DRAINAGE DITCHES, ROADS, GUTTERS, AND NATURAL AREAS.

SOIL EROSION AND SEDIMENTATION CONTROL SHALL BE PROVIDED AND MAINTAINED BY THE CONTRACTOR, AT HIS EXPENSE, THROUGHOUT THE LIFE OF THE CONTRACT AND DURING THE CONTRACT WARRANTY PERIOD. FOR ALL AREAS THAT ARE GRADED OR DISTURBED AS A RESULT OF THE CONTRACTOR'S WORK ACTIVITY, CONTROL MEASURES SHALL CONSIST OF APPROVED PRACTICES FOUND IN THE EROSION AND SEDIMENT CONTROL PLANNING AND DESIGN MANUAL AND AS SHOWN ON THE CONSTRUCTION DRAWINGS AS APPROVED BY THE N.C. DEPARTMENT OF ENVIRONMENT AND NATURAL RESOURCES DIVISION OF LAND RESOURCES AND INSTALLED AS SUCH.

IN THE EVENT THAT LOCAL CONDITIONS CHANGE TO RENDER DESIGNED SEDIMENTATION AND EROSION CONTROL INEFFECTIVE, THE CONTRACTOR SHALL IMMEDIATELY NOTIFY THE DIRECTOR OF ENGINEERING FOR A FIELD CHANGE DISPOSITION.

AFTER DISTURBED AREAS ARE STABILIZED AND ALL TEMPORARY MEASURES REMOVED, THE SEDIMENT SHALL BE SPREAD IN A MANNER NOT TO ADVERSELY AFFECT PROTECTION PROCEDURES AND THEN THE AREA SHALL BE SEEDED AND MULCHED. OTHERWISE, SEDIMENT IS TO BE DISPOSED OF BY HAULING AND SPREADING AS DETAILED ON THE DIVISION OF LAND RESOURCES' APPROVED SEDIMENTATION AND EROSION CONTROL DRAWINGS.

PROTECTION OF WETLANDS

ALL AREAS SHOWN AS WETLANDS ON THE CONSTRUCTION DRAWINGS SHALL BE PROTECTED BY DIRECTIONS GIVEN ON THE PLANS AND ALL WORK WITHIN THESE AREAS SHALL BE IN ACCORDANCE WITH PROVISIONS AS SET FORTH IN THE ARMY CORPS OF ENGINEERS 404 PERMIT, THE N.C. DEPARTMENT OF ENVIRONMENT AND NATURAL RESOURCES 401 PERMIT/CERTIFICATION, AND THE DIVISION OF LAND RESOURCES' LETTER OF APPROVAL.

SEEDING, GROUND COVERS, AND MULCHING

AREAS DAMAGED BY CONSTRUCTION WORK SHALL BE RESTORED TO A CONDITION APPROVED BY THE DIRECTOR OF ENGINEERING BY WORKING, FERTILIZING, SEEDING, AND MULCHING.

SEEDING SHALL BE DONE WITHIN FIVE (5) DAYS AFTER THE INITIAL GROUND DISTURBANCE. THE BED SHALL BE PREPARED BY PULVERIZING THE SOIL TO A DEPTH OF THREE INCHES. TILLAGE SHALL CONTINUE UNTIL A WEATHER-PULVERIZED, FIRM, AND UNIFORM SITE IS PREPARED CONFORMING TO ADJACENT PROPERTY. THE SOIL MUST BE LOOSE ENOUGH FOR WATER INFILTRATION AND ROOT PENETRATION. GOOD DRAINAGE MUST BE PROVIDED AND VISIBLE PONDING WILL NOT BE ALLOWED. ALL STONES, ROCKS, STICKS, RUBBISH, AND OTHER OBJECTIONABLE MATERIAL SHALL BE REMOVED PRIOR TO FERTILIZATION. THE pH OF THE SOIL SHALL BE NON-TOXIC TO THE SEED MIXTURE. PLANT SMALL GRAINS NO DEEPER THAN 1 INCH AND GRASSES/LEGUMES NO DEEPER THAN 1/2 INCH. PLANTING IS TO BE UNIFORM IN SCATTER PATTERN.

TEMPORARY DAM FOR UTILITY PIPE CROSSING

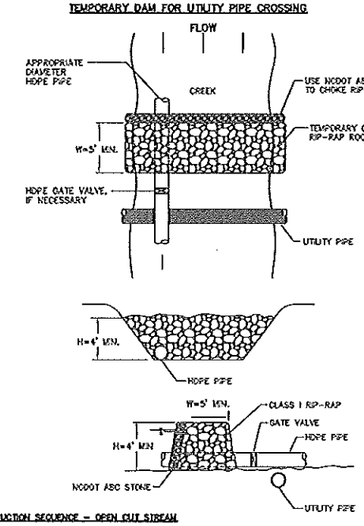

CONSTRUCTION SEQUENCE - OPEN CUT STREAM

WORK TO BE PERFORMED AT LOW FLOW CONDITIONS.

CONTRACTOR SHALL NOT BEGIN WORK IF CHANCE OF RAIN IS FORECASTED WITHIN 72 HOURS.

2.
ALL NECESSARY MATERIALS AND EQUIPMENT MUST BE ON-SITE BEFORE ANY WORK BEGINS.

3.
THE CONSTRUCTION SHALL BE COMPLETED IN AN EXPEDIENT MANNER.

4.
FORM TEMPORARY DAM WITH CLASS I RIP-RAP AND CLASS B EROSION CONTROL STONE OR NCDOT ABC STONE TO DIVERT FLOW THROUGH HDPE PIPE.

5.
DEWATER, EXCAVATE, AND INSTALL THE SEWER IN A DRY TRENCH.

6.
DEWATERING - ALL WATER SHALL BE DIVERTED INTO THE NEAREST SEDIMENT TRAP OR AN APPROVED SEDIMENT BLADDER FOR FILTERING PURPOSES.

7.
WHEN UTILITY INSTALLATION IS COMPLETE, REMOVE ALL MATERIALS FROM WATERWAY.

8.
STABILIZE BANKS AS SHOWN ON THE RIP-RAP REPLACEMENT DETAIL AND SPECIFICATIONS.

9.

THE FOLLOWING SCHEDULES SHALL BE USED FOR RESEEDING DISTURBED AREAS:

OUTFALLS

1-CED
STEEP SLOPES OR POOR SOILS AND LOW MAINTENANCE

****** MIXTURE ********** RATE (LB/ACRE) **********

TALL FESCUE	100
SERICEA LESPEDEZA	30
KOBE LESPEDEZA	10

SEEDING DATES	BEST	POSSIBLE
FALL	AUG. 25 - SEPT. 15	AUG. 20 - OCT. 25
LATE WINTER	FEB. 15 - MAR. 21	FEB. 1 - APR. 15

SEEDING NOTES
1. FALL IS THE BEST FOR TALL FESCUE AND LATE WINTER FOR LESPEDEZAS. OVERSEEDING OF KOBE LESPEDEZA OVER FALL SEEDED TALL FESCUE IS VERY EFFECTIVE.
2. AFTER AUG. 15, USE UNSCARIFIED SERICEA SEED.
3. WHERE A NEAT APPEARANCE IS SPECIFIED, OMIT SERICEA AND SUBSTITUTE BERMUDAGRASS AT 15 LB/ACRE. USE ONLY WHERE BERMUDAGRASS WILL NOT BECOME A PEST AND ONLY UPON THE APPROVAL OF THE DIRECTOR OF ENGINEERING.
4. BETWEEN MAY 1 AND AUG. 15 ADD 10 LB/ACRE GERMAN MILLET OR 15 LB/ACRE SUDANGRASS. PRIOR TO MAY 1 AND AFTER AUG. 15, ADD 40 LB/ACRE RYE GRAIN.

FERTILIZER
APPLY LIME AND FERTILIZER AS REQUIRED BY SOIL TESTING RESULTS OR APPLY 4,000 LB/ACRE GROUND AGRICULTURAL LIMESTONE AND 1,000 LB/ACRE 10-10-10 FERTILIZER. NO FERTILIZER SHALL BE PLACED WITHIN TEN (10) FEET OF STREAMS.

MULCH
APPLY 4,000-5,000 LB/ACRE GRAIN STRAW, OR EQUIVALENT COVER OF SUITABLE MULCHING MATERIAL. TACK BY USING ASPHALT, ROVING OR NETTING. NETTING IS TO BE USED ON STEEP SLOPES AS DIRECTED BY THE CONSTRUCTION DRAWINGS. NOTE: LESSER AMOUNTS OF STRAW MAY BE USED WITH MECHANICAL SPREADERS.

MAINTENANCE
RESEED, FERTILIZE AND MULCH DAMAGED AREAS IMMEDIATELY. REFERTILIZE AT END OF WARRANTY PERIOD IF GROWTH IS NOT SATISFACTORY TO THE DIRECTOR OF ENGINEERING.

2-CED
GENTLE SLOPES, AVERAGE/GOOD MOISTURE RETENTION AND LOW MAINTENANCE

****** MIXTURE ********** RATE (LB/ACRE) **********

TALL FESCUE	60
SERICEA LESPEDEZA	20
KOBE LESPEDEZA	10

SEEDING DATES	BEST	POSSIBLE
FALL	AUG. 25 - SEPT. 15	AUG. 20 - OCT. 25
LATE WINTER	FEB. 15 - MAR. 21	FEB. 1 - APR. 15

SEEDING NOTES
1. FALL IS BEST FOR TALL FESCUE AND LATE WINTER FOR LESPEDEZAS. OVERSEEDING OF KOBE LESPEDEZA OVER FALL SEEDED TALL FESCUE IS VERY EFFECTIVE.
2. AFTER AUG. 15, USE UNSCARIFIED SERICEA SEED.
3. WHERE A NEAT APPEARANCE IS SPECIFIED, OMIT SERICEA AND INCREASE KOBE LESPEDEZA TO 40 LB/ACRE.
4. BETWEEN MAY 1 AND AUG. 15 ADD 10 LB/ACRE GERMAN MILLET OR 15 LB/ACRE SUDANGRASS. PRIOR TO MAY 1 OR AFTER AUG. 15, ADD 40 LB/ACRE RYE GRAIN.
5. IN WETLAND AREAS, RESEEDING/REPLANTING SHALL INCLUDE ENDEMIC PLANT SPECIES SUCH AS SMARTWEED, FALSE NETTLE, CATTAIL SEDGE, SEDGES AND OTHER PLANTINGS AS RECOMMENDED BY THE N.C. WILDLIFE RESOURCES COMMISSION AND THE N.C. DEPARTMENT OF ENVIRONMENT AND NATURAL RESOURCES. PERENNIALS SUCH AS FESCUE ARE PROHIBITED. TOP 8" TO 12" OF TRENCH TO BE BACKFILLED W/ ORIGINAL TOPSOIL FROM TRENCH.

FERTILIZER
APPLY LIME AND FERTILIZER AS REQUIRED BY SOIL TESTING RESULTS OR APPLY 4,000 LB/ACRE GROUND AGRICULTURAL LIMESTONE AND 1,000 LB/ACRE 10-10-10 FERTILIZER. NO FERTILIZER SHALL BE PLACED WITHIN TEN (10) FEET OF STREAMS.

MULCH
APPLY 4,000 LB/ACRE GRAIN STRAW, OR EQUIVALENT COVER OF SUITABLE MULCHING MATERIAL. TACK BY USING ASPHALT, ROVING OR NETTING. NETTING IS TO BE USED ON STEEP SLOPES AS DIRECTED BY THE CONSTRUCTION DRAWINGS. NOTE: LESSER AMOUNTS OF STRAW MAY BE USED WITH MECHANICAL SPREADERS.

MAINTENANCE
RESEED, FERTILIZE AND MULCH DAMAGED AREAS IMMEDIATELY. REFERTILIZE AT END OF WARRANTY PERIOD IF GROWTH IS NOT SATISFACTORY TO THE DIRECTOR OF ENGINEERING.

ROADSIDES

1-CED
GRASS PULLOVERS, SIDE DITCHES, AND HIGH MAINTENANCE

****** MIXTURE ********** RATE (LB/ACRE) **********
TALL FESCUE 200 (4-5 LB/1000 SQ. FT)

SEEDING DATES	BEST	POSSIBLE
FALL	AUG. 15 - OCT.	
WINTER	AVOID SEEDING NOV. TO JAN. FEB. 15 - APR. 15 (SEE NOTE 1.)	

SEEDING NOTES
1. IF SEEDING MUST BE ACCOMPLISHED DURING WINTER, ADD 40 LB/ACRE RYE GRAIN AND USE A CHANNEL LINING THAT OFFERS MAXIMUM PROTECTION.

FERTILIZER
APPLY LIME AND FERTILIZER AS REQUIRED BY SOIL TESTING RESULTS OR APPLY 4,000 LB/ACRE GROUND AGRICULTURAL LIMESTONE AND 1,000 LB/ACRE 10-10-10 FERTILIZER. OPERATE TILLAGE EQUIPMENT ACROSS SIDE DITCHES. NO FERTILIZER SHALL BE PLACED WITHIN TEN (10) FEET OF STREAMS.

MULCH
MATTING MATERIAL (JUTE/EXCELSIOR MATTING) SHALL BE USED TO COVER THE SIDE DITCH CHANNEL UP TO THE HIGHEST LEVEL OF CHANNEL FLOW. SECURE AGAINST WASHING. IN OTHER AREAS USE 4,000 LB/ACRE GRAIN STRAW AND ANCHOR BY SECURING NETTING OVER STRAW OR BY TACKING WITH ASPHALT WHERE ALLOWED BY THE DIRECTOR OF ENGINEERING. NOTE: LESSER AMOUNTS OF STRAW MAY BE USED WITH MECHANICAL SPREADERS. STRAW AND ANCHORING MATERIAL SHALL NOT BE ALLOWED TO WASH TO CHANNELS OR INLET STRUCTURES.

MAINTENANCE
RESEED, FERTILIZE, AND MULCH DAMAGED AREAS IMMEDIATELY. MOW REGULARLY.

IF GROUND COVERS SUCH AS EVERGREEN SHRUBS AND VINES ARE SPECIFIED, REFER TO THE NOTATIONS ON THE CONSTRUCTION DRAWINGS AND ANY ITEMS IN THE SPECIAL CONDITIONS AS TO SPACING, PLANTING RATES OR OTHER DIRECTIONS THAT ARE APPLICABLE TO THIS TYPE OF EROSION CONTROL.

STONE OUTLET AT SEDIMENT FENCE

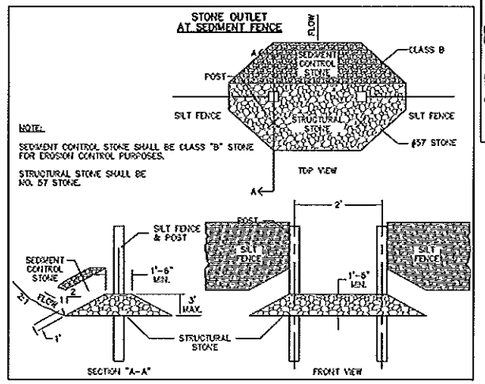

NOTE:
SEDIMENT CONTROL STONE SHALL BE CLASS "B" STONE FOR EROSION CONTROL PURPOSES.

STRUCTURAL STONE SHALL BE NCDOT #57 STONE.

SEDIMENTATION AND EROSION CONTROL LEGEND

- CHANNEL, GRASS-LINED
- CHANNEL, RIP-RAP & PAVED
- CHECK DAM
- TEMPORARY GRAVEL CONSTRUCTION ENTRANCE/EXIT
- CONSTRUCTION ROAD STABILIZATION
- DIVERSION (PERMANENT)
- DIVERSION (TEMPORARY)
- DROP INLET PROTECTION, FABRIC
- DUST CONTROL
- FILTER DAM
- GROUND COVERS
- INLET PROTECTION, BLOCK & GRAVEL
- OUTLET STABILIZATION STRUCTURE
- RIP-RAP
- ROCK DAM
- SEDIMENT BASIN
- SEDIMENT FENCE (SILT FENCE)
- SEDIMENT TRAP (TEMPORARY)
- SEEDING (PERMANENT)
- SEEDING (TEMPORARY)
- MULCHING
- STREAM CROSSING (PERMANENT)
- STREAM CROSSING (TEMPORARY)
- STREAM BANK STABILIZATION (VEGETATION)
- STREAM BANK STABILIZATION (STRUCTURE)
- TREE PROTECTION
- WATER BARS (ROW DIVERSION)
- TRACKING

TEMPORARY GRAVEL CONSTRUCTION ENTRANCE/EXIT

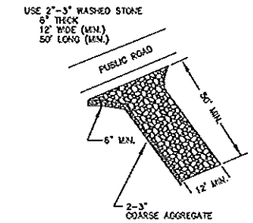

RIP-RAP APRON

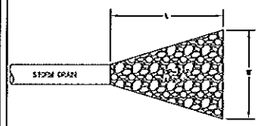

RIP RAP SIZING		APRON DIMENSIONS	
PIPE DIA.	D50	W	L
12"	6"	12'	12'
15"	6"	12'	15'
18"	6"	15'	18'
24"	9"	18'	22'
30"	9"	20'	25'
36"	9"	22'	28'
42"	12"	32'	34'
48"	12"	32'	34'

PLAN

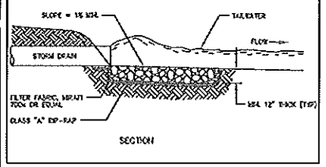

SECTION

NOT FOR CONSTRUCTION

Concord NORTH CAROLINA High Performance Living

PREPARED BY
TRANSPORTATION DEPARTMENT
CITY OF CONCORD
P.O. BOX 308
CONCORD N.C. 28026
(704) 920-5362

OLD CHARLOTTE ROAD SIDEWALK EXTENSION
PHASE 1
PROJECT #: 8600-5585000
EROSION CONTROL

REV. #	DATE	DESCRIPTION	BY

DESIGNED BY: JKW
DRAWN BY: JNS
CHECKED BY: JKW
SCALE: NONE
DATE: 11/29/12
PROJECT NUMBER:
SHEET: 5 OF: 5