Concord
NORTH CAROLINA
High Performance Living

TREASURE DRIVE
STORMWATER IMPROVEMENTS

INDEX OF SHEETS

DRAWING NO.	DESCRIPTION
GENERAL	
CVR	COVER
X1	GENERAL NOTES AND ABBREVIATIONS
STORM DRAINAGE	
C1	PLAN AND PROFILE
UTILITY RELOCATION	
PP1	SEWER PLAN AND PROFILE
PP2	SEWER PLAN AND PROFILE
PP3	WATER LINE PLAN AND PROFILE
PAVEMENT PLAN	
PAV1	PAVEMENT REPLACEMENT PLAN
EROSION AND SEDIMENT CONTROL	
EC1	PLAN
EC2	EROSION DETAILS
STRUCTURAL	
S1	GENERAL NOTES
S2	PLANS
S3	SECTIONS AND DETAILS
S4	STANDARD DETAILS
TRAFFIC CONTROL	
TC1	DETOUR PLAN
STANDARD DETAILS	
D1	MISCELLANEOUS DETAILS
D2	MISCELLANEOUS AND CITY OF CONCORD DETAILS
D3	NCDOT AND WSACC STANDARD DETAILS
D4	WSACC STANDARD DETAILS

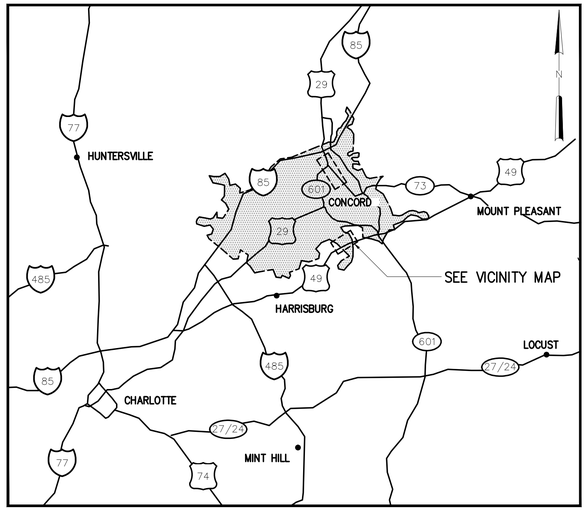

LOCATION MAP

SCALE : N.T.S.

OCTOBER 2015

ISSUED FOR BIDDING

NORTH CAROLINA PROFESSIONAL SEAL 18179 ENGINEER JAMES N. STRUNK 10/8/15

NORTH CAROLINA PROFESSIONAL SEAL 16728 ENGINEER STEPHEN R. SANDS

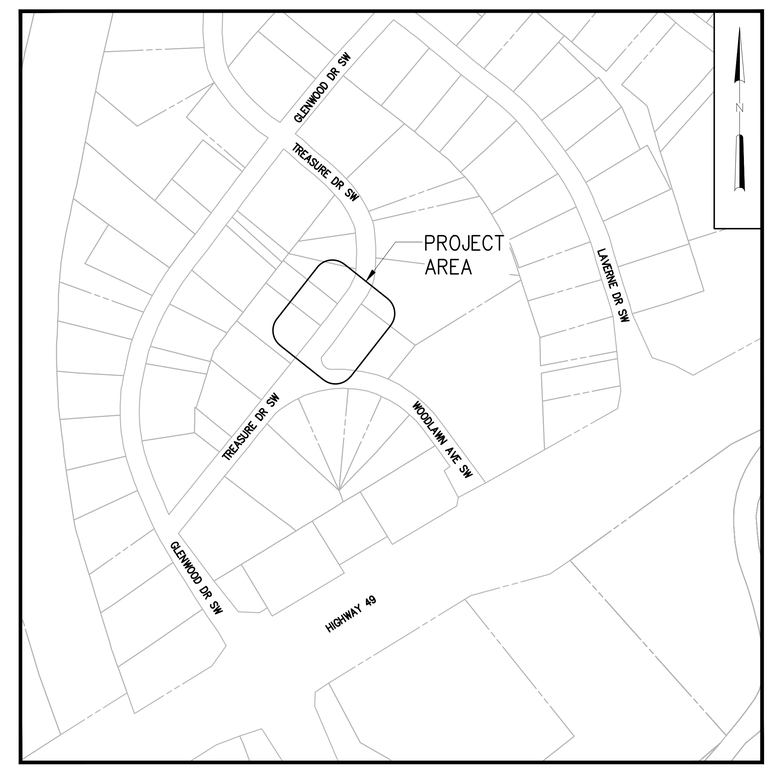

VICINITY MAP

SCALE : N.T.S.

Hazen

HAZEN AND SAWYER
4944 Parkway Plaza Blvd #375, Charlotte, NC 28217
(704) 357-3150

GENERAL NOTES

GENERAL CONDITIONS:

A MINIMUM OF 5 WORKING DAYS PRIOR TO THE BEGINNING OF ANY WORK IN THE FIELD, CONTACT THE PROJECT MANAGER, TOM BACH AT 704-920-5344.

CONTACT ENGINEER IMMEDIATELY REGARDING ANY CONFLICTS THAT ARISE DURING CONSTRUCTION OF WORK SHOWN ON THE DRAWINGS.

ANY LAND CORNER, PROPERTY MONUMENTATION, OR BENCHMARK WITHIN THE LIMITS OF CONSTRUCTION SHALL BE PROTECTED. IF A CORNER MONUMENT IS IN DANGER OF BEING DESTROYED, THE CONTRACTOR SHALL NOTIFY THE OWNER IMMEDIATELY. ANY CORNER MONUMENT DISTURBED OR DESTROYED SHALL BE RESET BY A PROFESSIONAL LAND SURVEYOR LICENSED IN THE STATE OF NC AT THE CONTRACTOR'S EXPENSE. CONTRACTOR TO PROTECT NCDOT RIGHT-OF-WAY MARKERS OR MONUMENTS PER NCDOT 806.01. CONTRACTOR TO REPLACE IF DISTURBED AT HIS EXPENSE.

DRIVEWAYS:

PROPOSED DRIVEWAY ENTRANCE DIMENSIONS ARE FROM EXPANSION JOINT TO EXPANSION JOINT. MATCH REPLACEMENT MATERIALS TO THE EXISTING SURFACE ACCORDINGLY:

- CONCRETE - SIX INCH PORTLAND CEMENT CONCRETE (3000 PSI).
- ASPHALT - (RESIDENTIAL) TWO INCH TYPE C COURSE AND FOUR INCH AGGREGATE BASE (ABC) COURSE.
- GRAVEL - SIX INCH AGGREGATE BASE

DRAINAGE STRUCTURES:

GRADES, ELEVATIONS AND LOCATIONS SHOWN ARE APPROXIMATE. AS DIRECTED BY THE ENGINEER, THEY MAY BE ADJUSTED TO ACCOMMODATE UNFORESEEN CONDITIONS. STATIONS, OFFSETS AND ELEVATIONS REFER TO THE CENTER OF DROP INLETS, MANHOLES AND JUNCTION BOXES, AND THE MIDPOINT OF THE LIP FOR CATCH BASINS. ALL PIPES SHALL BE RCP CLASS III, UNLESS OTHERWISE NOTED.

WEEPHOLES ARE TO BE CONSTRUCTED IN ALL DRAINAGE STRUCTURES, A MINIMUM OF 1 WEEPHOLE PER STRUCTURE. WEEPHOLES ARE TO BE CONSTRUCTED IN THE BOTTOM 1/3 OF STRUCTURE AND COVERED ON THE OUTSIDE OF THE STRUCTURE BY A BAG MADE OF FILTER FABRIC AND FILLED W/ WASHED STONE. THERE WILL BE NO SEPARATE PAYMENT FOR THIS WORK.

ALL DRIVEWAYS, DRAIN PIPES, AND HEADWALLS SHALL BE RESTORED TO EQUAL OR BETTER THAN EXISTING CONDITION, IN BOTH NEW AND EXISTING RIGHT-OF-WAY AND WITHIN ANY TEMPORARY EASEMENT AREAS. ANY STRUCTURES OR DRIVEWAYS DISTURBED OUTSIDE THE RIGHT-OF-WAY OR EASEMENT SHALL ALSO BE FULLY RESTORED AT NO COST TO THE PROPERTY OWNER.

UTILITIES:

FOR UTILITY LOCATES CALL NORTH CAROLINA ONE-CALL @ 811 OR 800-632-4949 A MINIMUM OF THREE BUSINESS DAYS (72 HOURS) BEFORE DIGGING. THE CONTRACTOR MUST CONTACT THE CITY OF CONCORD ENGINEERING CONSTRUCTION MANAGER, PHILLIP KINGSLAND (704-920-5425) AT LEAST 24-HOURS PRIOR TO INITIATING ANY CONSTRUCTION ACTIVITY.

UTILITIES ARE ILLUSTRATED FOR INFORMATION PURPOSES ONLY. THE CITY WILL NOT BE HELD RESPONSIBLE FOR THE ACCURACY OF UTILITY LOCATIONS, SIZES, DEPTHS, OR FOR COMPLETENESS OF UTILITY INFORMATION.

THE CONTRACTOR SHALL PROTECT ALL UTILITIES FROM DAMAGE CAUSED BY HIS OPERATIONS OR THOSE OF HIS AGENTS. THE CONTRACTOR SHALL HOLD THE CITY HARMLESS FOR ANY THIRD-PARTY INCONVENIENCE CREATED BY WORK OF HIS OWN FORCES OR THAT OF HIS AGENTS. ANY DAMAGES INCURRED SHALL BE THE CONTRACTORS FINANCIAL RESPONSIBILITY.

AS NEEDED, THE CONTRACTOR SHALL ADJUST/RELOCATE THE SANITARY SEWER AND WATER LINES ONLY. ALL OTHER ADJUSTMENTS/RELOCATIONS WILL BE PERFORMED BY THE VARIOUS UTILITY OWNERS. THE CONTRACTOR SHALL COORDINATE WORK WITH UTILITY OWNERS SO AS NOT TO ADVERSELY AFFECT THE PROJECT SCHEDULE. THE CITY WILL NOT BE HELD RESPONSIBLE FOR ANY DELAYS OR DISRUPTIONS TO THE WORK SCHEDULE OF OTHER UTILITY OWNERS.

THE CONTRACTOR SHALL ADJUST ALL WATER VALVES, WATER METER BOXES, SEWER MANHOLE LIDS, AND WATER VAULTS TO FINISHED GRADE. WATER METERS LOCATED IN SIDEWALKS OR CONCRETE DRIVEWAYS SHALL BE INSTALLED WITHIN CONCRETE BOXES.

GAS LINES WILL BE ADJUSTED/RELOCATED AS NEEDED BY PIEDMONT NATURAL GAS. THE CONTRACTOR SHALL CONTACT PIEDMONT NATURAL GAS AT LEAST TWO WEEKS PRIOR TO CONSTRUCTION.

THE CONTRACTOR SHALL USE CARE WHEN WORKING AROUND SANITARY SEWERS AND WATER LINES. SHOULD THE CONTRACTOR DAMAGE EXISTING SEWER OR WATER LINES, HE SHALL IMMEDIATELY REPLACE THE LINE AT HIS EXPENSE WITH PC350 DUCTILE IRON PIPE. THE CONTRACTOR SHALL REPLACE SANITARY SEWER AND/OR WATER LINE, WITH A MINIMUM TWENTY FOOT SECTION OF PC350 DUCTILE IRON PIPE WHEN DRAINAGE PIPE COMES WITHIN TWO FEET OF SAID LINES, VERTICALLY OR HORIZONTALLY.

ALL MATERIALS, EQUIPMENT, LABOR, AND WORKMANSHIP SHALL BE IN ACCORDANCE WITH AND SUBJECT TO THE WATER AND SEWER AUTHORITY OF CABARRUS COUNTY'S STANDARD SPECIFICATIONS; THE CITY OF CONCORD'S ORDINANCES, POLICIES, AND STANDARD SPECIFICATIONS, AND THE NORTH CAROLINA ADMINISTRATIVE CODE FOR WASTEWATER COLLECTION AND WATER DISTRIBUTION SYSTEMS. IN THE EVENT OF CONFLICT BETWEEN THE WATER AND SEWER AUTHORITY OF CABARRUS COUNTY'S STANDARD SPECIFICATIONS; THE CITY OF CONCORD'S ORDINANCES, POLICIES, AND STANDARD SPECIFICATIONS, OR THE NORTH CAROLINA ADMINISTRATIVE CODE, THE MORE RESTRICTIVE REQUIREMENTS SHALL APPLY.

WATER AND SEWER MAINS ARE TO REMAIN ACTIVE DURING CONSTRUCTION. IF THIS IS NOT POSSIBLE, THE CONTRACTOR SHALL FOLLOW THE OWNER'S SPECIAL PROVISIONS REGARDING OUTAGES, TEMPORARY WATER SERVICE AND BYPASS SEWER PUMPING.

ALL SEWER SERVICE LATERALS ARE NOT SHOWN ON THESE PLANS AND MAY BE ENCOUNTERED DURING CONSTRUCTION. THE CONTRACTOR IS RESPONSIBLE FOR COORDINATION WITH CITY OF CONCORD WATER RESOURCES DEPARTMENT TO ENSURE THAT ALL EXISTING WATER AND SEWER SERVICES ARE KEPT IN SERVICE. THIS WORK IS INCIDENTAL TO ALL CONSTRUCTION ACTIVITIES.

SEWER SERVICE LATERALS SHOWN ON THE PLANS ARE APPROXIMATE LOCATIONS.

THE CONTRACTOR SHALL MAKE EVERY EFFORT TO MINIMIZE THE DURATION OF ANY WATER SUPPLY DISRUPTION AND/OR LOSS TO THE EXISTING CITY OF CONCORD CUSTOMERS. THE CONTRACTOR MUST NOTIFY THE ASSIGNED CITY OF CONCORD CONSTRUCTION INSPECTOR AT LEAST 72 HOURS IN ADVANCE OF ANY SCHEDULED WATER SERVICE LOSS OR DISRUPTION, AND PROVIDE WRITTEN NOTIFICATION ON A CITY APPROVED FORM TO EACH CITY OF CONCORD CUSTOMERS THAT SPECIFIES THE DAY AND DURATION OF ANY SCHEDULED WATER SERVICE LOSS OR DISRUPTION AND INCLUDE THE APPROPRIATE CITY CONTACT NUMBERS.

THE CONTRACTOR SHALL BE RESPONSIBLE FOR PROVIDING TEMPORARY POTABLE WATER SUPPLIES TO ANY CUSTOMER UPON REQUEST BY THE CITY AND/OR WHEN THE DURATION OF THE WATER SERVICE LOSS OR DISRUPTION EXCEEDS 4 HOURS.

SUBSURFACE PLANS:

SUBSURFACE PLANS ARE AVAILABLE ON THIS PROJECT AND MAY BE REQUESTED FROM THE ENGINEER. THE CONTRACTOR MAY MAKE HIS OWN INVESTIGATION TO DETERMINE SUBSURFACE CONDITIONS.

MAIL BOXES:

THE CONTRACTOR SHALL BE RESPONSIBLE FOR THE REMOVAL, PRESERVATION, AND RESETTING OF ALL MAILBOXES DISTURBED BY THE CONSTRUCTION OPERATIONS. THE MAILBOXES AND THEIR SUPPORTS, WHEN RESET, SHALL BE LEFT IN AS GOOD A CONDITION AS THEY WERE BEFORE REMOVAL. THE CONTRACTOR WILL NOT BE REQUIRED TO FURNISH NEW MATERIAL EXCEPT AS REQUIRED TO REPAIR DAMAGE RESULTING FROM CONSTRUCTION OPERATIONS. COORDINATE THIS WORK WITH THE U.S. POSTAL SERVICE. MAILBOXES SHALL REMAIN IN SERVICE AT ALL TIMES.

FENCES:

THE CONTRACTOR SHALL REMOVE AND RESET FENCES AS NOTED ON THE PLANS AND/OR AS DIRECTED BY THE ENGINEER.

TREES, SHRUBS, AND HEDGES:

THE CONTRACTOR SHALL REMOVE TREES, SHRUBS, AND HEDGES WITHIN THE LIMITS OF DISTURBANCE UNLESS SHOWN ON THE PLANS TO BE PROTECTED AND THOSE THAT FALL WITHIN TREE PROTECTION BARRIERS. WHEN ROOT PRUNING IS NECESSARY, CUT ROOTS CLEANLY USING A DISC TRENCHER OR OTHER APPROVED METHOD. TREE PROTECTION SHALL BE INSTALLED PER THE PLANS OR AS DIRECTED BY THE ENGINEER.

IN ADDITION, ALL TREES LOCATED WITHIN THE LIMIT OF DISTURBANCE THAT ARE TO REMAIN AFTER CONSTRUCTION SHALL BE INSPECTED BE THE CITY TO VERIFY THEY ARE SUITABLE TO REMAIN.

THE CONTRACTOR ASSUMES RESPONSIBILITY FOR "IN-KIND" REPLACEMENT OF TREES DAMAGED THAT HAVE BEEN MARKED FOR PROTECTION OR NOT MARKED FOR REMOVAL.

TOLERANCE:

STRUCTURES INCLUDING STORM DRAIN PIPE, STORM STRUCTURES, SEWER PIPE, AND RETAINING WALLS SHALL HAVE A TOLERANCE OF ±0.10 FEET. STRUCTURES INCLUDING RISERS, WEIRS, AND ORIFICES, SHALL HAVE A TOLERANCE OF ±0.05 FEET.

STREAM IMPROVEMENT STRUCTURES SHALL HAVE A VERTICAL TOLERANCE OF ±0.10 FEET, AND A PLANIMETRIC TOLERANCE OF ±0.50 FEET.

SAWCUTS:

THE CONTRACTOR SHALL SAWCUT EXISTING ASPHALT AND/OR CONCRETE SURFACES PRIOR TO REMOVAL UNLESS OTHERWISE DIRECTED BY THE ENGINEER. SAW CUT WIDTH SHALL BE 1 FOOT MINIMUM FROM THE EXISTING EDGE OF PAVEMENT. SAW CUT PAVEMENT SHALL BE REPLACED AS WELL AS ADDITIONAL PAVEMENT REQUIRED TO TIE-IN TO FACE OF PROPOSED CURB AND GUTTER.

TRAFFIC CONTROL:

CONTRACTOR SHALL ONLY WORK ON ONE CORNER OF AN INTERSECTION AT A TIME.

DURING THE HOURS OF 7:00 AM-9:00 AM and 4:30 PM-6:30 PM MONDAY THRU FRIDAY CONSTRUCTION OR MAINTENANCE WORK WHICH INVOLVES CLOSURE OF A TRAVEL LANE WILL NOT BE ALLOWED ON THOROUGHFARE STREETS EXCEPT FOR EMERGENCY SITUATIONS OR WITH PRIOR APPROVAL FROM THE CITY OF CONCORD.

THE CONTRACTOR SHALL LIMIT CONSTRUCTION TO ONE STREET AT A TIME, UNLESS OTHERWISE INSTRUCTED BY THE ENGINEER. THE CONTRACTOR SHALL LIMIT CONSTRUCTION TO ONE BLOCK EACH DAY IN ORDER TO DECREASE THE AMOUNT OF BACKFILL.

CONTRACTOR SHALL BE RESPONSIBLE FOR MAKING SITE ACCESSIBLE FOR EMERGENCY VEHICLES AT ALL TIMES.

ALL AREAS WITH OPEN EXCAVATIONS, OPEN VAULTS OR MANHOLES, OR EQUIPMENT SHALL BE COVERED AT END OF EACH WORK DAY.

TRAFFIC CONTROL SHALL BE IN ACCORDANCE WITH NCDOT WORK ZONE SAFETY GUIDELINES, CITY OF CONCORD REQUIREMENTS, AND THE TRAFFIC CONTROL PLANS. ALL TRAFFIC CONTROL DEVICES SHALL CONFORM TO THE REQUIREMENTS OF THE MOST CURRENT EDITIONS OF THE MANUAL ON UNIFORM TRAFFIC CONTROL DEVICES (M.U.T.C.D.), THE NORTH CAROLINA DEPARTMENT OF TRANSPORTATION (NCDOT) SUPPLEMENT TO THE M.U.T.C.D., THE NCDOT ROADWAY STANDARD DRAWINGS AND THE CURRENT EDITION OF THE NCDOT STANDARD SPECIFICATIONS FOR ROADS AND STRUCTURES.

THE CONTRACTOR IS TO NOTIFY THE CITY OF CONCORD IN WRITING 10 WORKING DAYS IN ADVANCE OF ANY ROAD CLOSURE OR 5 WORKING DAYS PRIOR TO CLOSING ONE OR MORE TRAVEL LANES.

THE CONTRACTOR SHALL BE REQUIRED TO FURNISH, INSTALL, RELOCATE, AND MAINTAIN ALL TRAFFIC CONTROL DEVICES, SIGNS, BARRICADES, WARNING AND/OR CHANNELIZING DEVICES FOR WORK SITES AND DETOUR ROUTES AS SHOWN IN TRAFFIC CONTROL PLANS UNLESS OTHERWISE SPECIFIED BY THE ENGINEER.

CONSTRUCTION PHASING MAY DICTATE THAT TWO OR MORE TYPICAL DIAGRAMS OR STANDARDS BE USED IN ONE AREA OF CONSTRUCTION. CHANNELIZING DEVICES ASSOCIATED WITH THESE TYPICALS SHALL BE MOVED, SUPPLEMENTED, CHANGED, OR REMOVED AS NECESSARY TO COMPLY WITH THE CONSTRUCTION PHASING OF THE PLANS. THE LOCATION AND POSITIONING OF THESE DEVICES SHALL BE APPROVED BY THE ENGINEER TO ENSURE THAT THE MOTORIST DOES NOT RECEIVE FALSE INFORMATION WHEN TWO OR MORE TYPICALS AND/OR ROADWAY STANDARD DRAWINGS OVERLAP.

CONTRACTOR SHOULD BE AWARE THAT WHEN THE CONSTRUCTION AREA IS IN OR NEAR A VERTICAL CREST OR HORIZONTAL CURVE, THE WORK AREA SHALL BE EXTENDED SO THAT LANE CLOSURE BEGINS IN ADVANCE OF THE CURVE AND MINIMUM STOPPING SIGHT DISTANCE IS MET.

THE CONTRACTOR SHALL MARK ALL HAZARDS WITHIN THE LIMITS OF THE PROJECT WITH WELL-MAINTAINED SIGNS, BARRICADES, WARNING AND/OR CHANNELIZING DEVICES. ON CONNECTING ROADS, ALL BARRICADES, SIGNS, WARNING, AND/OR CHANNELIZING DEVICES SHALL BE MOVED, SUPPLEMENTED, CHANGED, OR REMOVED AS REQUIRED DURING THE PROGRESS OF CONSTRUCTION AS APPROVED BY THE ENGINEER.

WORK ON THE PROJECT OR ANY SEPARATE ACTIVITY THEREIN SHALL NOT START UNTIL ALL OF THE REQUIRED SIGNS, BARRICADES, WARNING, AND/OR CHANNELIZING DEVICES ARE INSTALLED AND APPROVED BY THE ENGINEER.

THE CONTRACTOR MUST MAINTAIN DURING ALL PERIODS OF CONSTRUCTION ACTIVITY THE ABILITY TO FLAG TRAFFIC USING QUALIFIED FLAGGERS WHEN NECESSARY OR REQUIRED

THE CONTRACTOR SHALL MAINTAIN TWO WAY TRAFFIC ON ALL PORTIONS OF THIS PROJECT UNLESS OTHERWISE SPECIFIED IN THE PLANS, PROJECT NOTES, OR BY THE ENGINEER.

CONTRACTOR WILL BE REQUIRED TO PROVIDE PROPERTY OWNERS AND TENANTS ACCESS TO THEIR PROPERTY THROUGHOUT THE PROJECT LIMITS, INCLUDING REASONABLE INGRESS AND EGRESS FOR BUSINESSES. SPECIAL ATTENTION SHALL BE PAID TO FIRE HYDRANTS.

THE CONTRACTOR IS TO NOTIFY (BY MAIL) ALL PROPERTY OWNERS AND OCCUPANTS WHO HAVE DIRECT ACCESS TO THE ROADWAY WITHIN THE PROJECT LIMITS A MINIMUM OF 5 AND A MAXIMUM OF 10 WORKING DAYS PRIOR TO INSTALLING TRAFFIC CONTROL DEVICES IN FRONT OF THOSE PROPERTIES. NOTIFICATIONS SHOULD INCLUDE CONTACT PERSONS NAME, TELEPHONE NUMBER, EMAIL ADDRESS, AND MAILING ADDRESS.

THE CONTRACTOR SHALL PATROL THE WORK SITE AT THE BEGINNING AND END OF EACH WORK DAY (AT A MINIMUM) TO ENSURE THAT ALL TRAFFIC CONTROL DEVICES ARE IN PLACE AND FUNCTIONING PROPERLY. CONTRACTOR SHALL ENSURE THAT ALL TRAFFIC CONTROL DEVICES ARE IN PLACE AND FUNCTIONING AT ALL TIMES DURING PERIODS OF CONSTRUCTION INACTIVITY.

DURING PERIODS OF INACTIVITY OR AT NIGHT, EQUIPMENT SHALL NOT BE PARKED IN SUCH A MANNER AS TO BLOCK SIDEWALKS, TRAFFIC CONTROL DEVICES, OR THE MOTORISTS' VIEW OF TRAFFIC. EQUIPMENT SHALL BE AT LEAST 15 FEET AWAY FROM THE TRAVEL LANE.

WHENEVER TRAFFIC MUST BE ROUTED ACROSS THE CENTERLINE DURING CONSTRUCTION ACTIVITY, THE TWO OPPOSING DIRECTIONS MUST BE PHYSICALLY SEPARATED. TRAFFIC CONES CAN BE USED FOR THIS PURPOSE DURING DAYLIGHT HOURS; REFLECTORIZED CONES OR DRUMS MUST BE USED AT NIGHT. TRAFFIC SHALL NOT BE ROUTED ACROSS THE CENTERLINE DURING CONSTRUCTION INACTIVITY UNLESS PAVEMENT MARKING CONFLICTS ARE APPROPRIATELY ADDRESSED AND AGREEMENT ON REMOVAL OR NOT IS WORKED OUT WITH THE ENGINEER. IF THE ENGINEER APPROVES TRAFFIC TO CROSS THE CENTER LINE DURING CONSTRUCTION INACTIVITY, ONLY REFLECTORIZED DRUMS MUST BE USED.

THE CITY, ENGINEER, OR THEIR APPOINTED REPRESENTATIVES ARE AUTHORIZED TO STOP ANY WORK WITHIN PUBLIC RIGHT OF WAY THAT DOES NOT FOLLOW THIS TRAFFIC CONTROL PLAN OR REQUIREMENTS OF THE NCDOT STANDARD DRAWINGS, AND THE M.U.T.C.D. UNTIL SUCH REQUIREMENTS ARE MET.

ADJACENT LANES TO CONSTRUCTION ZONES MAY REMAIN OPEN IF LATERAL CLEARANCE BETWEEN EDGE OF TRAVEL LANE AND EQUIPMENT IS EQUAL TO OR GREATER THAN 2 FEET (INCLUDING WIDTH OF DRUM).

THE CONTRACTOR SHALL FOLLOW THE PHASING AS DESCRIBED HEREIN. THE CONTRACTOR SHALL COMPLETE THE REQUIREMENTS OF EACH CONSTRUCTION PHASE IN SEQUENCE. WHEN A CONSTRUCTION PHASE IS DIVIDED INTO STEPS, THE CONTRACTOR SHALL COMPLETE THE REQUIREMENTS OF EACH STEP IN SEQUENCE. (EXAMPLE: THE REQUIREMENTS OF PHASE I SHALL BE COMPLETED BEFORE PROCEEDING TO PHASE II; THE REQUIREMENTS OF STEP 1 OF PHASE I SHALL BE COMPLETED BEFORE PROCEEDING TO STEP 2 OF PHASE I). ALL WORK DESCRIBED IN THE PROJECT PHASING SHALL BE PERFORMED BY THE CONTRACTOR, EXCEPT WHERE IT IS SPECIFIED FOR CERTAIN WORK TO BE PERFORMED BY OTHERS.

THE CONTRACTOR SHALL NOT BE ALLOWED TO STOP TRAFFIC FOR MORE THAN 5 MINUTES AT A TIME IN ANY ONE DIRECTION.

CONTRACTOR SHALL NOT BE ALLOWED TO WORK ON BOTH SIDES OF THE ROAD SIMULTANEOUSLY WITHIN THE SAME AREA EXCEPT WHERE THE ROADWAY IS DIVIDED BY A RAISED MEDIAN. IT WILL BE ACCEPTABLE TO CONSTRUCT BORE PITS ON EACH SIDE OF A ROADWAY FOR BORING UTILITIES UNDER THE ROADWAY UNLESS SUPERCEDED BY ENGINEER TO COMPLY WITH PEDESTRIAN REQUIREMENTS OR LATERAL CLEARANCE FROM TRAVEL LANES.

AT NIGHT, ADEQUATE BARRICADES WITH REFLECTORIZED MATERIAL AND LIGHTS ARE REQUIRED TO CALL ATTENTION TO AND TO INDICATE THE ACTUAL LOCATION OF OBSTRUCTIONS AND HAZARDS.

THE MINIMUM WIDTH FOR TEMPORARY TRAVEL LANES IS 10 FEET; HOWEVER, A 12 FOOT LANE IS ADVISABLE AND SHOULD BE PROVIDED WHENEVER POSSIBLE.

OPERATIONS SIGNS ARE GENERALLY MOUNTED ON PORTABLE SUPPORTS. THESE ARE USUALLY USED FOR SHORT TERM OPERATIONS TO WARN AND GUIDE TRAFFIC. ADVANCED WARNING SIGNS (CONSTRUCTION AHEAD) SHALL BE MOUNTED ON STATIONARY SUPPORTS 7 DAYS PRIOR TO THE BEGINNING OF CONSTRUCTION OF THE ROADWAY.

ALL DRUMS SHALL BE BALLASTED IN SUCH A MANNER THAT THEY WILL BE STABLE UNDER WIND AND VEHICLE ACTION. BALLASTING SHALL BE DONE WITH SANDBAGS OR OTHER YIELDING MATERIAL SITUATED IN THE BASE OF THE DRUMS

AT THE END OF EACH WORK DAY THE CONTRACTOR SHALL BACKFILL UP TO THE EDGE AND ELEVATION OF THE EXISTING PAVEMENT AREAS WITHIN 2 FEET OF AN OPEN TRAVEL LANE THAT INCLUDES A DROP OFF OF MORE THAN 3 INCHES IN ACCORDANCE WITH NCDOT REQUIREMENTS.

EROSION CONTROL:

THE CONTRACTOR SHALL MAINTAIN EROSION CONTROL DEVICES IN ACCORDANCE WITH THE APPROPRIATE CITY AND STATE EROSION AND SEDIMENT CONTROL ORDINANCES. THE CONTRACTOR SHALL PREVENT STANDING WATER DUE TO CONSTRUCTION. DISTURBED AREAS SHALL BE SEEDED AND MULCHED AT THE DIRECTION OF THE ENGINEER. THE CONTRACTOR SHALL FOLLOW THE EROSION CONTROL MEASURES SHOWN IN THE EROSION CONTROL PLANS AND AS DIRECTED BY THE ENGINEER.

CONTRACTOR IS RESPONSIBLE FOR PROCURING ALL MOBILIZATION, STORAGE, AND STAGING AREAS AS WELL AS ACCESS TO ANY CONSTRUCTION SITES. EROSION CONTROL DEVICES SHALL BE INSTALLED AND MAINTAINED AT ALL WORK SITES, STAGING AREAS, AND OFF SITE SPOIL AREAS. CONTRACTOR SHALL FOLLOW ALL LOCAL REGULATIONS REGARDING THE WORK, INCLUDING KEEPING MUD AND DIRT OFF OF PRIVATE ENTRANCES, AND REHABILITATING STAGING, STORAGE OR STOCKPILING AREAS TO EQUAL OR BETTER THAN EXISTING CONDITION. CONTRACTOR SHALL TAKE ALL REASONABLE MEASURES TO PREVENT TRACKING MUD/SOIL ON ADJACENT ROADWAYS. ANY MUD/SOIL TRACKED ON ROADWAYS SHALL BE CLEANED DAILY. CONTRACTOR IS RESPONSIBLE FOR PROCURING ALL PERMITS FOR THESE ADDITIONAL AREAS.

EROSION AND SEDIMENTATION CONTROL FACILITIES SHALL BE INSTALLED PRIOR TO CLEARING OR PERFORMING EXCAVATION IN ANY AREA. EROSION CONTROL FACILITIES SHALL BE MAINTAINED DURING WORK AND SHALL BE REMOVED WHEN WORK IS COMPLETED AND ENGINEER AUTHORIZES REMOVAL.

TEMPORARY SEEDING AND MULCHING SHALL BE PERFORMED AS SPECIFIED IN SECTION 02276 - EROSION AND SEDIMENTATION CONTROL.

THE CONTRACTOR SHALL INSPECT ALL EROSION CONTROL MEASURES AT LEAST ONCE A WEEK OR AFTER EACH RAINFALL EVENT, AND REPAIR IF NECESSARY, TO ENSURE THAT ALL EROSION CONTROL MEASURES ARE FUNCTIONING PROPERLY.

DISTURBED AREAS SHALL BE SEEDED AND MULCHED OR MATTED NO LONGER THAN 14 CALENDAR DAYS AFTER GRADING HAS BEEN COMPLETED OR CONSTRUCTION CEASES. PERIMETER AREAS AND SLOPES GREATER THAN 3:1 SHALL BE SEEDED AND MULCHED OR MATTED WITHIN 7 CALENDAR DAYS.

ANY EXCAVATED SOIL HAULED OFF SITE MUST GO TO A PERMITTED SITE.

FABRIC, SAND, OR SCREENINGS SHALL BE PLACED UNDER ANY STOCKPILE OF SOIL ON PAVED SURFACES.

ANY TURBID WATER PUMPED OFF SITE MUST BE PUMPED THROUGH A FILTER BAG.

ADDITIONAL SEDIMENT AND EROSION CONTROL MEASURES MAY BE NECESSARY TO SUPPORT DEWATERING EFFORTS.

CONTRACTOR SHALL ENSURE THAT WATER LEAVING SITE DURING THE DEWATERING PROCESS AND CONSTRUCTION ACTIVITIES IS SEDIMENT FREE.

ONSITE TEMPORARY SOIL STOCKPILES SHALL BE LOCATED IN THE LIMITS OF DISTURBANCE. TEMPORARY STOCKPILES SHALL HAVE TEMPORARY SILT FENCE INSTALLED AT THE TOE OF SLOPE AND BE SEEDED AND MULCHED.

BYPASS PUMPING WILL BE REQUIRED UNLESS SPECIFIED BY THE ENGINEER IN WRITING OTHERWISE. CONSTRUCT AN IMPERVIOUS DIKE UPSTREAM OF THE WORK AREA AND PUMP AROUND THE CONSTRUCTION ACTIVITIES.

BASIN OUTLET STRUCTURES MUST WITHDRAW WATER FROM THE SURFACE UNLESS THE DRAINAGE AREA IS LESS THAN 1 ACRE.

IF A TEMPORARY STREAM CROSSING IS USED, THE CULVERT PIPE SHALL BE A MIN. OF A SINGLE 72" HDPE PIPE OR TWO 48" HDPE PIPES INSTALLED AT 1.00%.

PROVIDE TEMPORARY DITCH LINING FOR DISTURBED DITCH LINES OR OTHER AREAS OF CONCENTRATED FLOW WHERE SLOPE IS GREATER THAN 2%.

INLET PROTECTION IS REQUIRED FOR ALL INLETS LOCATED IN THE WORKING AREA AND ADJACENT AREAS AND REQUIRED UNTIL THE SITE IS FULLY STABILIZED.

ADDITIONAL SILT FENCE AND SILT FENCE STONE OUTLETS MAY BE REQUIRED BASED ON FIELD CONDITIONS AS APPROVED BY ENGINEER.

ABBREVIATIONS

ABAND	ABANDONED
A.D	ALGEBRAIC DIFFERENCE
ASPH	ASPHALT
APPROX	APPROXIMATELY
AE	ACCESS EASEMENT
BOC	BACK OF CURB
BIT	BITUMINOUS
BM	BENCH MARK
BRG	BEARING
CB	CATCH BASIN
C&G	CURB AND GUTTER
CL	CLEARANCE
C/L FENCE	CHAIN LINK FENCE
CMP	CORRUGATED MTL PIPE
CONC	CONCRETE
CONST	CONSTRUCTION
DB	DEED BOOK
DI	DROP INLET/ DUCTILE IRON
DIA	DIAMETER
DW	DRIVEWAY
DIM	DIMENSION
DTL	DETAIL
E	EAST/ EASTING
EA	EACH
ELEV	ELEVATION
EOP	EDGE OF PAVEMENT
ESMT	EASEMENT
EXIST/EX	EXISTING
F/C	FACE OF CURB
FES	FLARED END SECTION
FH	FIRE HYDRANT
FOC	FIBER OPTIC CABLE
FOSW	FRONT OF SIDEWALK
GV	GAS VALVE
HORIZ	HORIZONTAL
HVAC	HEATING/VENT/AIR UNIT
HW	HEADWALL
INT	INTERSECTION
INV	INVERT
IP	IRON PIN SET
L	LENGTH
LF	LINEAR FOOTAGE
LT	LEFT
lb	POUND
LP	LIGHT POLE
LOD	LIMIT OF DISTURBANCE
MAX	MAXIMUM
MH	MANHOLE
MIN	MINIMUM
MONO	MONOLITHIC
mph	MILES PER HOUR
MTL	METAL
N	NORTH/NORTHING
NTS	NOT TO SCALE
OC	ON CENTER
OE	OVERHEAD ELECTRIC
O/H	OVER HEAD
PAVT	PAVEMENT

PC	POINT OF CURVATURE
PERM	PERMANENT
PG	PAGE
PI	POINT OF INTERSECTION
PK	PK NAIL SET
PP	POWER POLE
PROP	PROPOSED
PSE	PERM SW ESMT
PT	POINT OF TANGENCY
PVI	POINT OF VERT INT
RCBC	REINFORCED CONC. BOX CULVERT
r	RADIUS
RET	RETAINING
RT	RIGHT
RCP	REINFORCED CONC PIPE
RELOC	RELOCATE
R/W	RIGHT OF WAY
S	SOUTH
SCDOT	SOUTH CAROLINA DEPT OF TRANSPORTATION
SD	STORM DRAIN
SDE	STORM DRAIN EASEMENT
SF	SQUARE FOOT
S/R FENCE	SPLIT RAIL FENCE
SS	SANITARY SEWER
STA	STATION
STD	STANDARD
SW	SIDEWALK
TAN	TANGENT
TCE	TEMP CONST ESMT
TEMP	TEMPORARY
TNS	TONS
TP	TRAVERSE POINT
T/W	TEST WIRE
TYP	TYPICAL
U/G	UNDER GROUND
VC	VERTICAL CURVE
VERT	VERTICAL
W	WEST
W/	WITH
WM	WATER METER
W VAULT	WATER VAULT
WV	WATER VALVE
60p	SIXTY PENNY NAIL SET
'	FOOT
"	INCH

BASE SURVEY DATA

EXISTING CONDITIONS TAKEN FROM A COMPILATION OF GROUND SURVEYS BY SURVEY, MAPPING, AND CONTROL, INC., COMPLETED IN "MAY 2014." ALL COORDINATES BASED ON NAD 83 AND NAVD 88.

Know what's below. Call before you dig.

NO.	ISSUED FOR	DATE	BY

DESIGNED SRS
DRAWN AKL
CHECKED JNS
PROJ. ENGR. SRS
APPROVED

NORTH CAROLINA PROFESSIONAL ENGINEER SEAL 18179 JAMES N. STRUVE 10/8/15

NORTH CAROLINA PROFESSIONAL ENGINEER SEAL 16228 STEPHEN R. SANDS

Hazen
HAZEN AND SAWYER
4944 Parkway Plaza Blvd #375, Charlotte, NC 28217
(704) 357-3150

Concord NORTH CAROLINA High Performance Living

TREASURE DRIVE
STORM WATER IMPROVEMENTS

GENERAL NOTES AND ABBREVIATIONS

THE SCALE BAR SHOWN BELOW MEASURES ONE INCH LONG ON THE ORIGINAL DRAWING.

DATE OCTOBER 2015
H & S JOB NUMBER 32180-002
CONTRACT NUMBER
DRAWING NUMBER X1

ISSUED FOR BIDDING

20151009 10:42A O:\32180-CHA\32180-002\Drawings\GEN\X1.dwg By:JGREENE Last Saved By: jgreene XREFs= ..\Tblock\31280-002-TB

NOTES:

1. SEE DWG PP1, PP2, AND PP3 FOR SANITARY SEWER AND WATER LINE IMPROVEMENTS.
2. SEE DWG PAV1 FOR LIMITS OF PAVEMENT REPLACEMENT.
3. CONTRACTOR SHALL BE RESPONSIBLE FOR SUPPORTING ALL UTILITY POLES DURING CONSTRUCTION WITHIN THE PROJECT LIMITS.

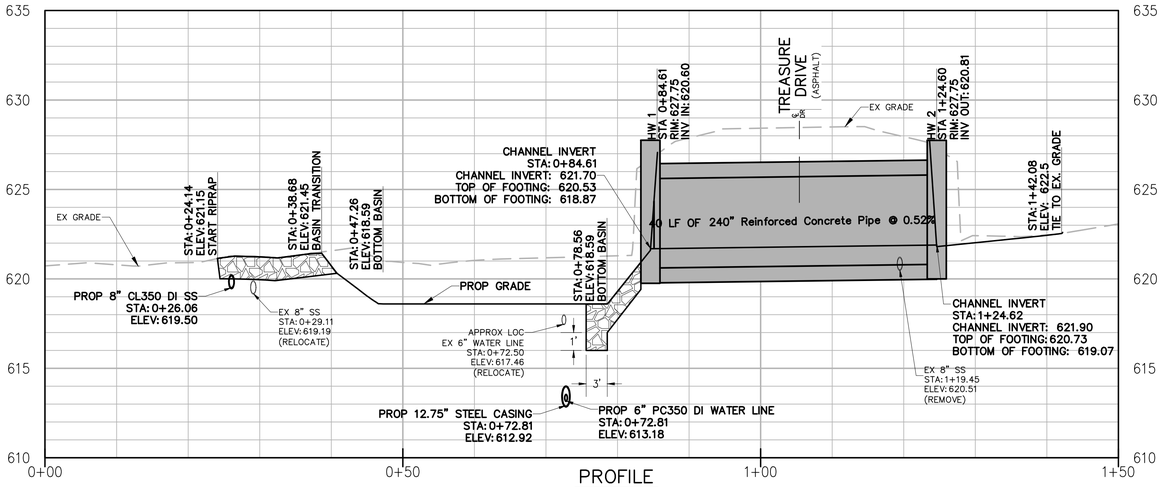

PROFILE

HORZ: 1"=10'
VERT: 1"=4'

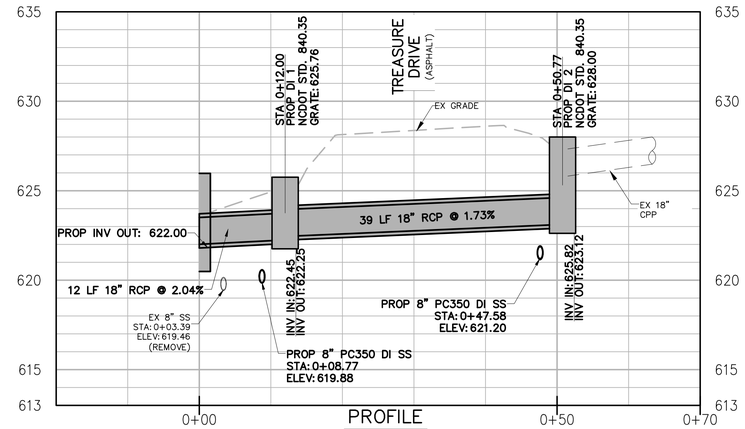

PROFILE

HORZ: 1"=10'
VERT: 1"=4'

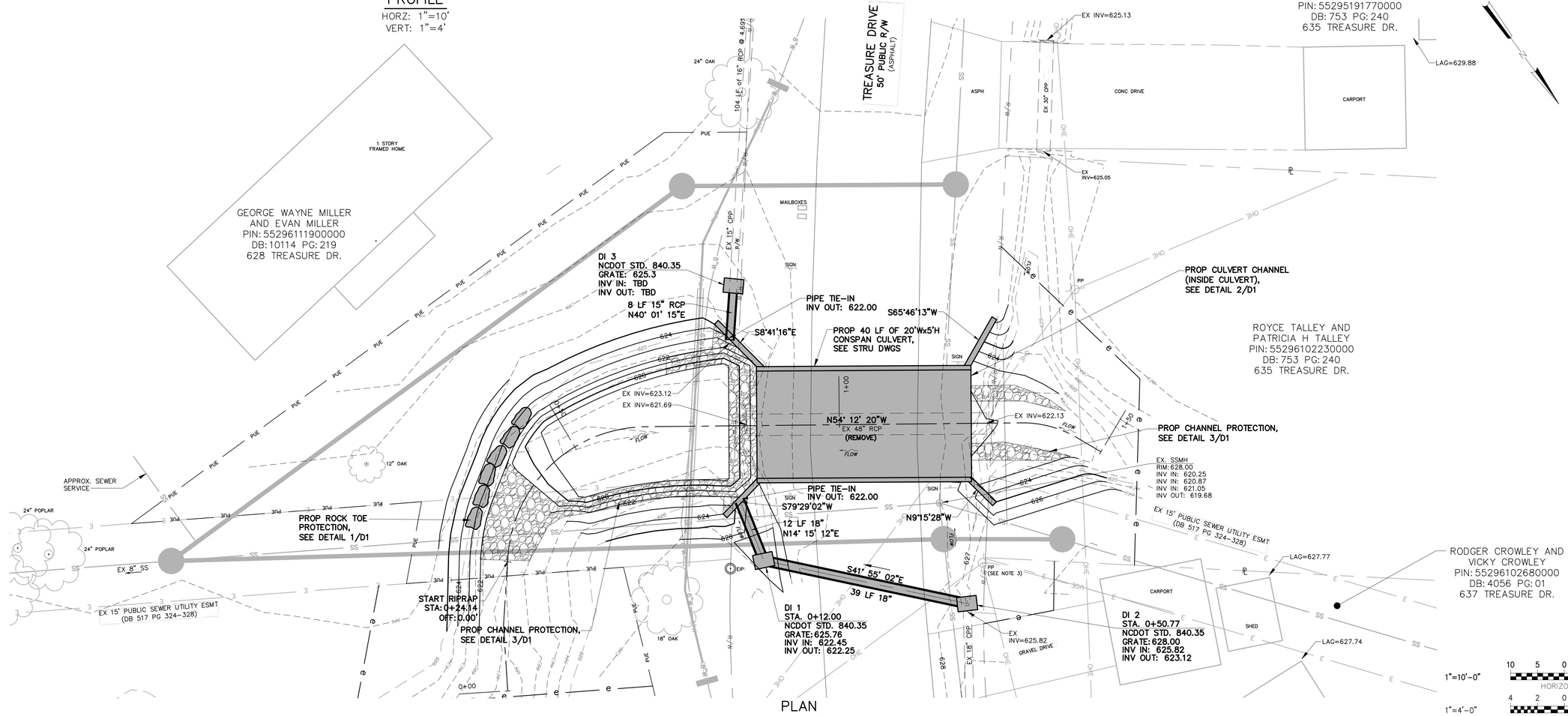

PLAN

1"=10'

1"=10'-0" 10 5 0 10' HORIZONTAL

1"=4'-0" 4 2 0 4' VERTICAL

Know what's below. Call before you dig.

NO.	ISSUED FOR	DATE	BY

DESIGNED SRS
DRAWN AKL
CHECKED JNS
PROJ. ENGR. SRS
APPROVED

NORTH CAROLINA PROFESSIONAL SEAL 18179 ENGINEER JAMES N. STRUNK 10/8/15

NORTH CAROLINA PROFESSIONAL SEAL 16202 ENGINEER STEPHEN R. SANDS

Hazen

HAZEN AND SAWYER
4944 Parkway Plaza Blvd #375, Charlotte, NC 28217
(704) 357-3150

Concord NORTH CAROLINA High Performance Living

TREASURE DRIVE
STORM WATER IMPROVEMENTS

STORM DRAINAGE

PLAN AND PROFILE

THE SCALE BAR SHOWN BELOW MEASURES ONE INCH LONG ON THE ORIGINAL DRAWING.

DATE OCTOBER 2015

H & S JOB NUMBER 32180-002

CONTRACT NUMBER

DRAWING NUMBER C1

ISSUED FOR BIDDING

20151009 10:42A O:\32180-OHA\32180-002\Drawings\CIVIL\C1.dwg By:JGREENE Last Saved By: jgreene XREFs= O:\32180-OHA\32180-002\Drawings\tblock\32180-002-TB,O:\32180-OHA\32180-002\Drawings\BASE\32180-002-BASE,O:\32180-OHA\32180-002\Drawings\BASE\32180-002-3D

NOTES:

1. SEE DWG C1 FOR STORM DRAINAGE IMPROVEMENTS.
2. CONTRACTOR RESPONSIBLE FOR RECONNECTION OF ALL SEWER SERVICES IN COMPLIANCE WITH WSACC STANDARDS. INCLUDING INSTALLATION OF CLEAN OUTS. WSACC PERMIT APPROVAL FOR SERVICE CONNECTIONS IS ALSO CONTRACTOR RESPONSIBILITY.

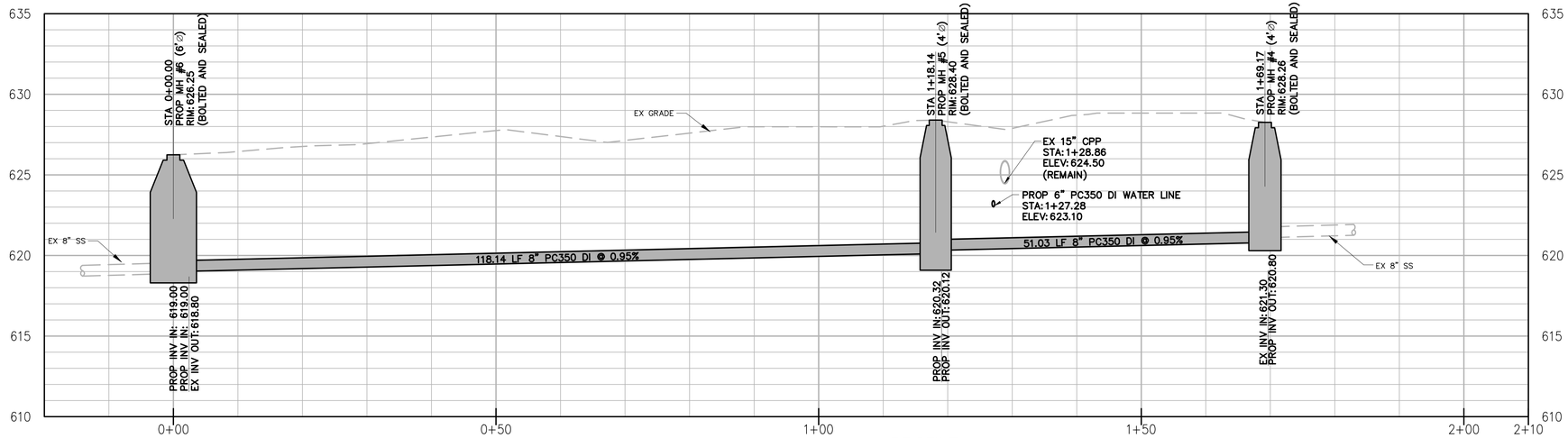

PROFILE

HORZ: 1"=10'
VERT: 1"=4'

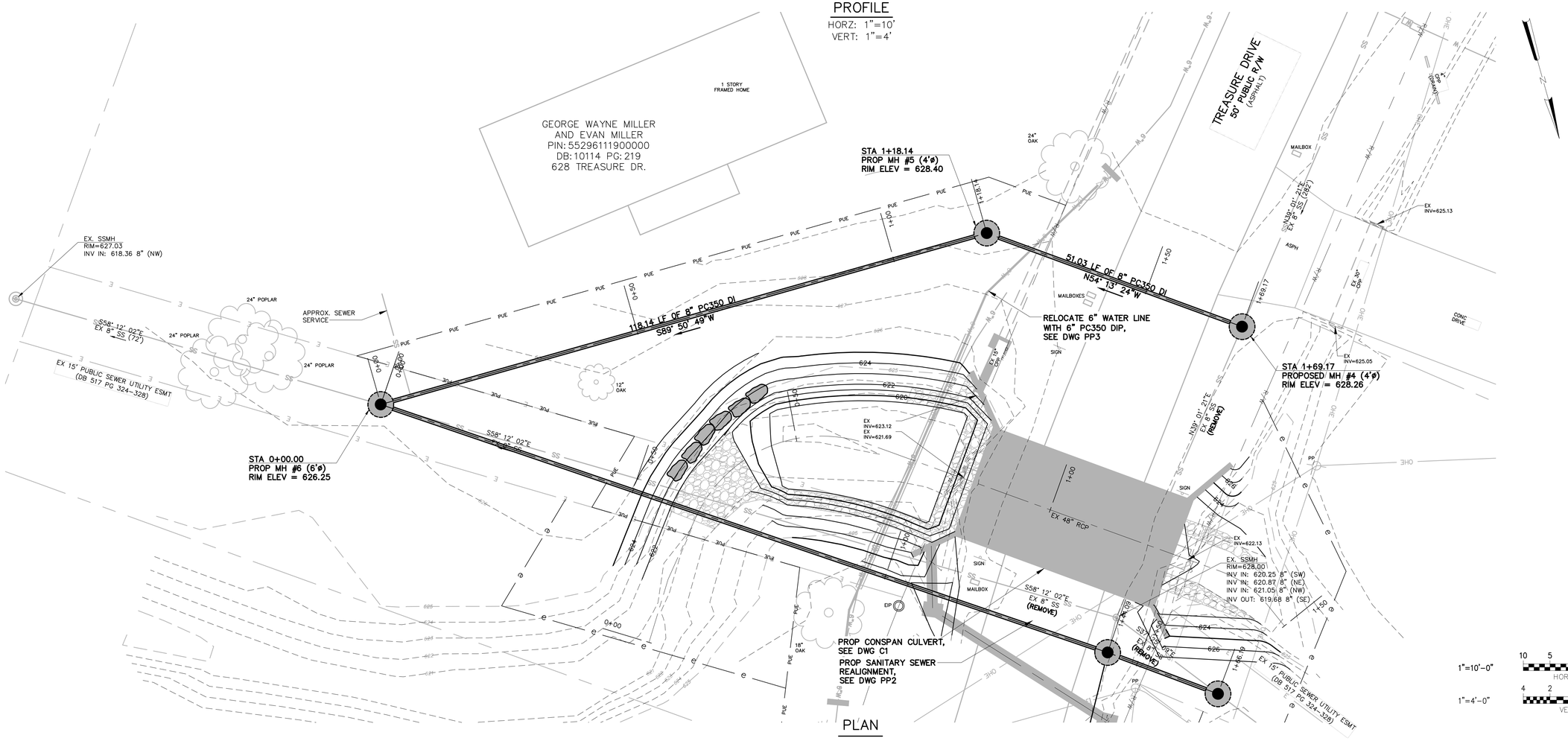

PLAN

1"=10'

1"=10'-0" HORIZONTAL (10 5 0 10')

1"=4'-0" VERTICAL (4 2 0 4')

Know what's below. Call before you dig.

NO.	ISSUED FOR	DATE	BY

DESIGNED SRS
DRAWN AKL
CHECKED JNS
PROJ. ENGR. SRS
APPROVED

NORTH CAROLINA PROFESSIONAL SEAL 18179 ENGINEER JAMES N. STRUVE 10/8/15

NORTH CAROLINA PROFESSIONAL SEAL 18726 ENGINEER STEPHEN R. SANDS

Hazen

HAZEN AND SAWYER
4944 Parkway Plaza Blvd #375, Charlotte, NC 28217
(704) 357-3150

Concord NORTH CAROLINA High Performance Living

TREASURE DRIVE
STORM WATER IMPROVEMENTS

UTILITY RELOCATION

SEWER PLAN AND PROFILE

THE SCALE BAR SHOWN BELOW MEASURES ONE INCH LONG ON THE ORIGINAL DRAWING.

DATE OCTOBER 2015
H & S JOB NUMBER 32180-002
CONTRACT NUMBER
DRAWING NUMBER PP1

ISSUED FOR BIDDING

20151009 10:43A O:\32180-CHA\32180-002\Drawings\CIVIL\PP1.dwg By:JGREENE Last Saved By: jgreene XREFs= O:\32180-CHA\32180-002\Drawings\tblock\32180-002-TB,O:\32180-CHA\32180-002\Drawings\BASE\32180-002-BASE,O:\32180-CHA\32180-002\Drawings\BASE\32180-002-3D

NOTES:

1. SEE DWG C1 FOR STORM DRAINAGE IMPROVEMENTS.
2. CONTRACTOR RESPONSIBLE FOR RECONNECTION OF ALL SEWER SERVICES IN COMPLIANCE WITH WSACC STANDARDS. INCLUDING INSTALLATION OF CLEAN OUTS. WSACC PERMIT APPROVAL FOR SERVICE CONNECTIONS IS ALSO CONTRACTOR RESPONSIBILITY.

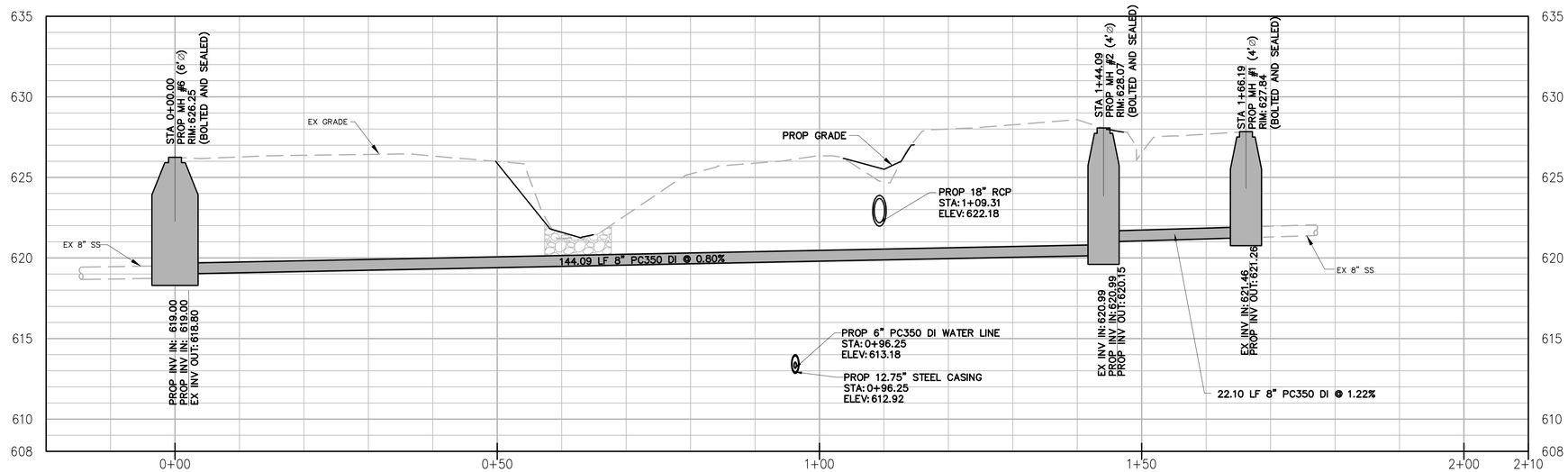

PROFILE

HORZ: 1"=10'
VERT: 1"=4'

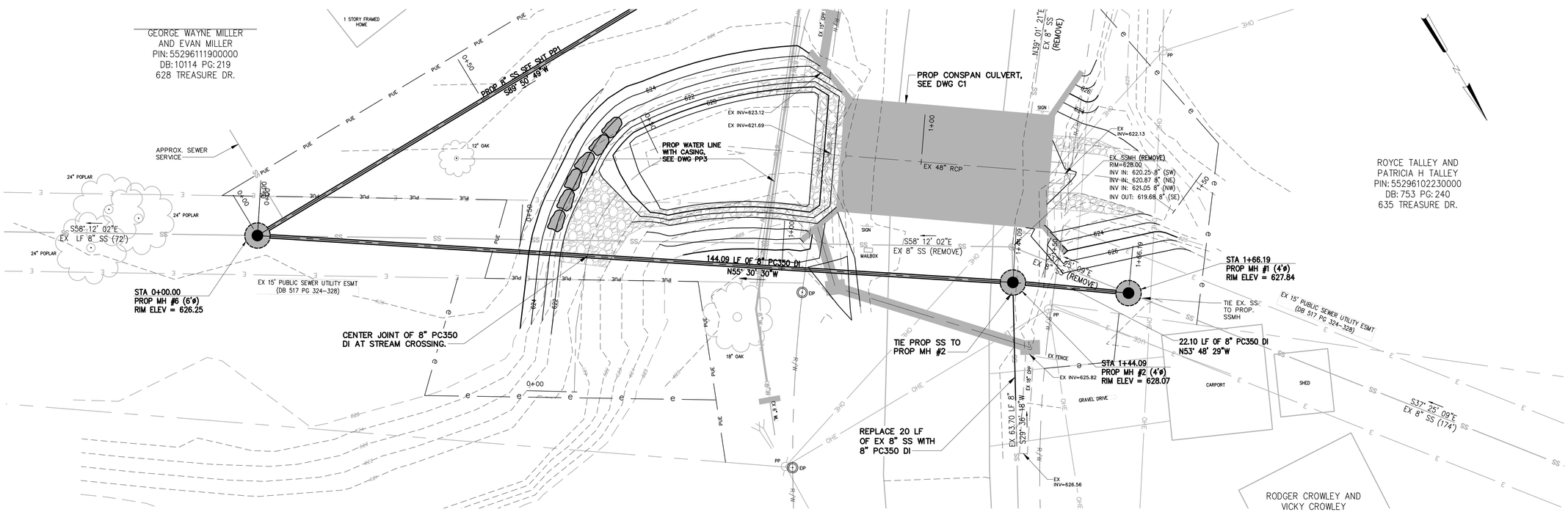

PLAN

1"=10'

1"=10'-0" 10 5 0 10' HORIZONTAL

1"=4'-0" 4 2 0 4' VERTICAL

Know what's below. Call before you dig.

NO.	ISSUED FOR	DATE	BY

DESIGNED SRS
DRAWN AKL
CHECKED JNS
PROJ. ENGR. SRS
APPROVED

NORTH CAROLINA PROFESSIONAL SEAL 18179 ENGINEER JAMES N. STRUVE 10/8/15

NORTH CAROLINA PROFESSIONAL SEAL 16228 ENGINEER STEPHEN R. SANDS

Hazen

HAZEN AND SAWYER
4944 Parkway Plaza Blvd #375, Charlotte, NC 28217
(704) 357-3150

Concord NORTH CAROLINA High Performance Living

TREASURE DRIVE
STORM WATER IMPROVEMENTS

UTILITY RELOCATION

SEWER PLAN AND PROFILE

THE SCALE BAR SHOWN BELOW MEASURES ONE INCH LONG ON THE ORIGINAL DRAWING.

DATE OCTOBER 2015
H & S JOB NUMBER 32180-002
CONTRACT NUMBER
DRAWING NUMBER PP2

ISSUED FOR BIDDING

20151009 10:43A O:\32180-OHA\32180-002\Drawings\CIVIL\PP2.dwg By:JGREENE Last Saved By: jgreene XREFs= O:\32180-OHA\32180-002\Drawings\Block\32180-002-TB,O:\32180-OHA\32180-002\Drawings\BASE\32180-002-BASE,O:\32180-OHA\32180-002\Drawings\BASE\32180-002-3D

NOTES:

1. SEE DWG C1 FOR STORM DRAINAGE IMPROVEMENTS.
2. CONTRACTOR RESPONSIBLE FOR RECONNECTION OF ALL WATER SERVICES IN COMPLIANCE WITH WSACC STANDARDS INCLUDING OF PRESSURE RELEIF AND SHUT-OFF VALVES. WASCC PERMIT APPROVAL FOR SERVICE CONNECTIONS IS ALSO CONTRACTOR RESPONSIBILITY.

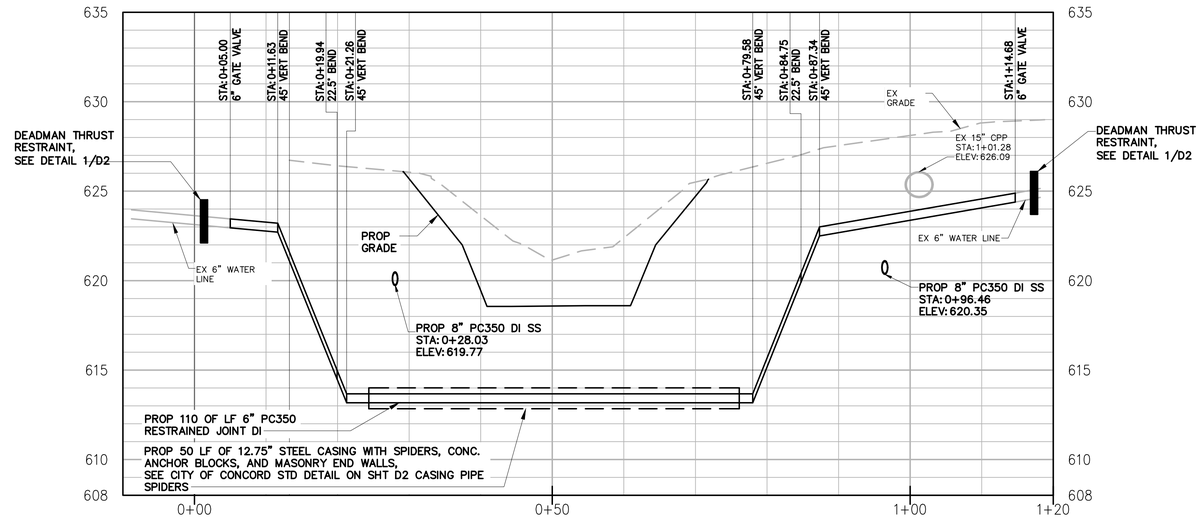

PROFILE

HORZ: 1"=10'
VERT: 1"=4'

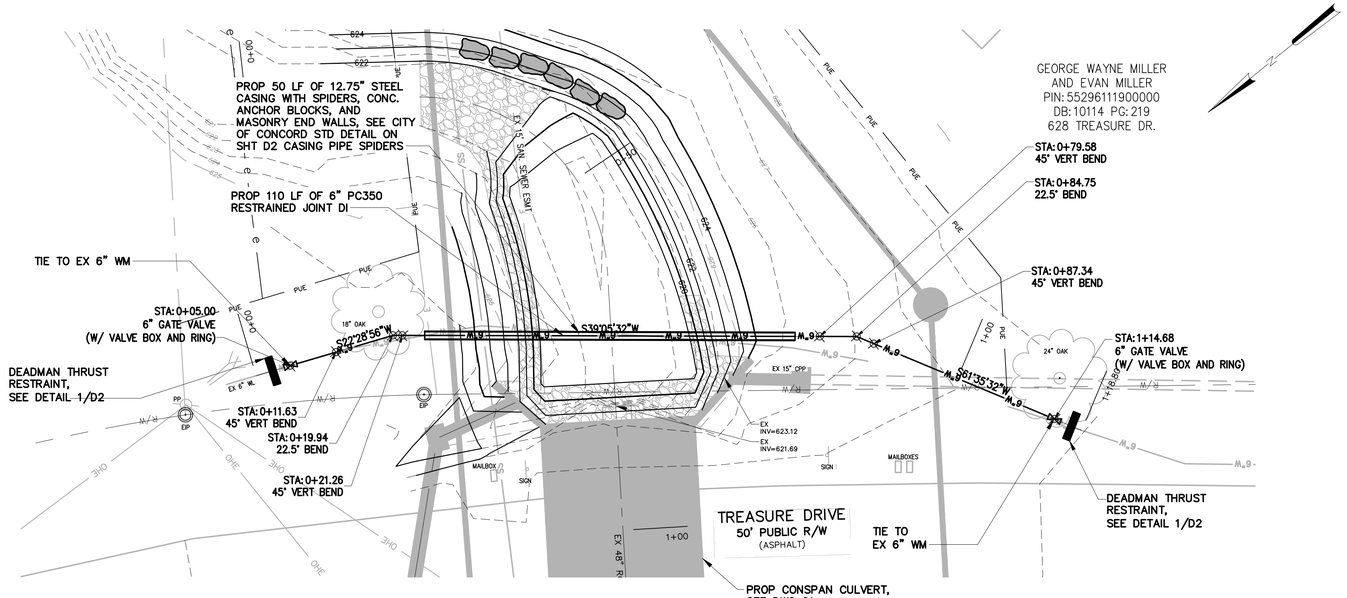

PLAN

1"=10'

1"=10'-0" 10 5 0 10' HORIZONTAL

1"=4'-0" 4 2 0 4' VERTICAL

Know what's below. Call before you dig.

NO.	ISSUED FOR	DATE	BY

DESIGNED SRS
DRAWN AKL
CHECKED JNS
PROJ. ENGR. SRS
APPROVED

NORTH CAROLINA PROFESSIONAL SEAL 18179 ENGINEER JAMES N. STRUVE 6/8/15

NORTH CAROLINA PROFESSIONAL SEAL 6728 ENGINEER STEPHEN R. SANDS

Hazen

HAZEN AND SAWYER
4944 Parkway Plaza Blvd #375, Charlotte, NC 28217
(704) 357-3150

Concord NORTH CAROLINA High Performance Living

TREASURE DRIVE
STORM WATER IMPROVEMENTS

UTILITY RELOCATION

WATER LINE PLAN AND PROFILE

THE SCALE BAR SHOWN BELOW MEASURES ONE INCH LONG ON THE ORIGINAL DRAWING.

DATE OCTOBER 2015
H & S JOB NUMBER 32180-002
CONTRACT NUMBER
DRAWING NUMBER PP3

ISSUED FOR BIDDING

20151009 10:44A O:\32180-CHA\32180-002\Drawings\CIVIL\PP3.dwg By:JGREENE Last Saved By: jgreene XREFs= O:\32180-CHA\32180-002\Drawings\Block\32180-002-TB,O:\32180-CHA\32180-002\Drawings\BASE\32180-002-BASE,O:\32180-CHA\32180-002\Drawings\BASE\32180-002-30

NOTES:

1. SEE DWG C1 FOR STORM DRAINAGE IMPROVEMENTS.
2. SEE DWG PP1, PP2, AND PP3 FOR SANITARY SEWER AND WATERLINE IMPROVEMENTS.

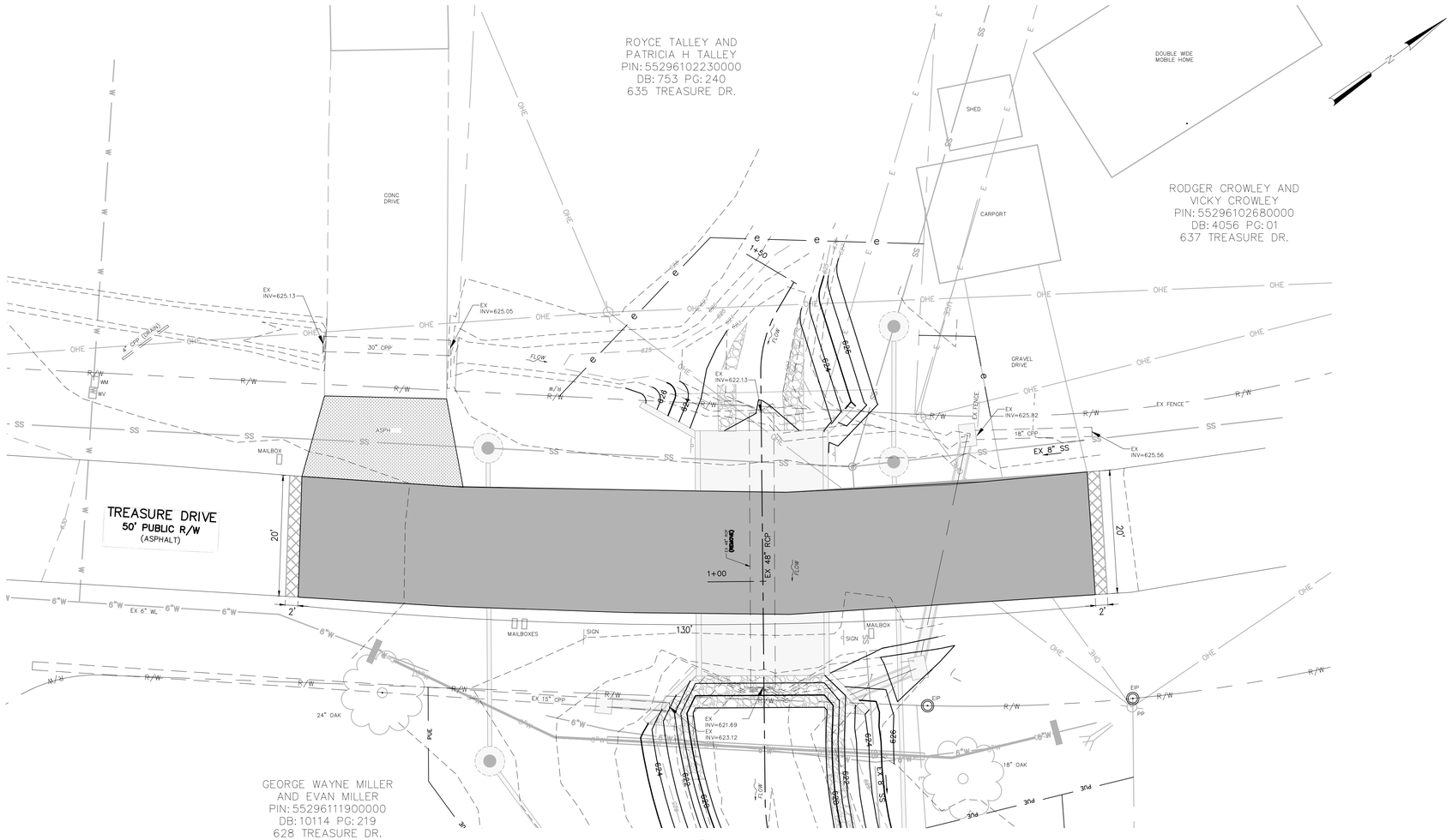

PLAN

1"=10'

LEGEND		
FULL DEPTH REPLACEMENT	284 SY	
MILL AND RESURFACE	9 SY	
DRIVEWAY APRON REPLACEMENT	36 SY	
*SEE SHEET D-2 FOR PAVEMENT DETAIL		

811. Know what's below. Call before you dig.

1"=10'-0" 10 5 0 10' HORIZONTAL

NO.	ISSUED FOR	DATE	BY

DESIGNED SRS
DRAWN AKL
CHECKED JNS
PROJ. ENGR. SRS
APPROVED

NORTH CAROLINA PROFESSIONAL SEAL 18179 ENGINEER JAMES N. STRUNK 8/15

NORTH CAROLINA PROFESSIONAL SEAL 027 ENGINEER STEPHEN R. SANDS

Hazen

HAZEN AND SAWYER
4944 Parkway Plaza Blvd #375, Charlotte, NC 28217
(704) 357-3150

Concord NORTH CAROLINA High Performance Living

TREASURE DRIVE
STORM WATER IMPROVEMENTS

PAVEMENT REPLACEMENT PLAN

THE SCALE BAR SHOWN BELOW MEASURES ONE INCH LONG ON THE ORIGINAL DRAWING.

DATE OCTOBER 2015
H & S JOB NUMBER 32180-002
CONTRACT NUMBER
DRAWING NUMBER PAV1

ISSUED FOR BIDDING

20151009 10:44A O:\32180-CHA\32180-002\Drawings\CIVIL\PAV-1.dwg By:JGREENE Last Saved By: jgreene XREFS= O:\32180-CHA\32180-002\Drawings\Tblock\,31280-002-TB,O:\32180-CHA\32180-002\Drawings\BASE\32180-002-BASE,O:\32180-CHA\32180-002\Drawings\BASE\32180-002-3D

GENERAL EROSION CONTROL NOTES:

1. THE CONTRACTOR SHALL INSPECT ALL EROSION CONTROL MEASURES AT LEAST ONCE A WEEK OR AFTER EACH RAINFALL EVENT, AND REPAIR IF NECESSARY, TO ENSURE THAT ALL EROSION CONTROL MEASURES ARE FUNCTIONING PROPERLY.
2. DISTURBED AREAS SHALL BE SEEDED AND MULCHED OR MATTED WITHIN 14 CALENDAR DAYS FOLLOWING COMPLETION OF ANY PHASE OF GRADING. PERIMETER AREAS AND SLOPES GREATER THAN 3:1 SHALL BE SEEDED AND MULCHED OR MATTED WITHIN 7 CALENDAR DAYS FOLLOWING COMPLETION OF ANY PHASE OF GRADING. ESTABLISH TEMPORARY VEGETATION AS NEEDED TO CONTROL SEDIMENT RUNOFF (NCDOT SECTIONS 1615 & 1620). ESTABLISH PERMANENT VEGETATION IN ACCORDANCE WITH NCDOT SECTION 1660 – SEEDING AND MULCHING AND NCECM SECTION 6.11.
3. ANY EXCAVATED SOIL HAULED OFF SITE MUST GO TO A PERMITTED SITE.
4. FABRIC, SAND, OR SCREENINGS SHALL BE PLACED UNDER ANY STOCKPILE OF SOIL ON PAVED SURFACES. ONSITE TEMPORARY SOIL STOCKPILES SHALL BE LOCATED WITHIN THE LIMITS OF DISTURBANCE. TEMPORARY STOCKPILES SHALL HAVE TEMPORARY SILT FENCE INSTALLED AT THE TOE OF SLOPE AND BE SEEDED AND MULCHED.
5. ANY TURBID WATER PUMPED OFF SITE MUST BE PUMPED THROUGH A SEDIMENT FILTER BAG.
6. ADDITIONAL SEDIMENT AND EROSION CONTROL MEASURES MAY BE NECESSARY TO SUPPORT DE-WATERING EFFORTS.
7. CONTRACTOR SHALL ENSURE THAT WATER LEAVING SITE DURING THE DE-WATERING PROCESS AND CONSTRUCTION ACTIVITIES IS SEDIMENT FREE.
8. CHANNEL BYPASS PUMPING REQUIRED. CONSTRUCT AN IMPERVIOUS DIKE UPSTREAM OF THE WORK AREA AND PUMP AROUND THE CONSTRUCTION ACTIVITIES (SEE DETAIL ON DWG EC2).
9. BASIN OUTLET STRUCTURES MUST WITHDRAW WATER FROM THE SURFACE UNLESS THE DRAINAGE AREA IS LESS THAN 1 ACRE.
10. CONSTRUCTION AND MAINTENANCE OF SILT DETENTION DEVICES ARE TO BE IN ACCORDANCE WITH NORTH CAROLINA DEPARTMENT OF TRANSPORTATION (NCDOT) SECTION 1630.
11. INLET PROTECTION SHALL BE INSTALLED AT ALL STORM INLETS UNTIL SURFACE STABILIZATION IS ESTABLISHED AND THERE IS NO LONGER A THREAT OF SEDIMENT RUNOFF.
12. ALL ROADWAYS ARE TO BE INSPECTED DAILY BY THE CONTRACTOR. ANY DEBRIS OR SOIL DEPOSITED ON THE ROADWAY SURFACE IS TO BE REMOVED BY THE CONTRACTOR PRIOR TO VACATING THE CONSTRUCTION SITE FOR THAT DAY. IF DANGEROUS CONDITIONS EXIST, THE ROADWAY SURFACE IS TO BE CLEANED IMMEDIATELY. CLEANING SHALL INCLUDE BROOM CLEANING OF THE ROADWAY SURFACE.

NOTES:

1. SEE DWG PP1, PP2, AND PP3 FOR SANITARY SEWER AND WATER LINE IMPROVEMENTS.
2. SEE DWG C1 FOR STORM DRAINAGE IMPROVEMENTS.
3. ALL EROSION CONTROL MEASURES SHALL BE INSTALLED PER THE NORTH CAROLINA EROSION AND SEDIMENT CONTROL PLANNING AND DESIGN MANUAL (NCECM) AND NCDOT STANDARDS AND SPECIFICATIONS FOR ROADS AND STRUCTURES.

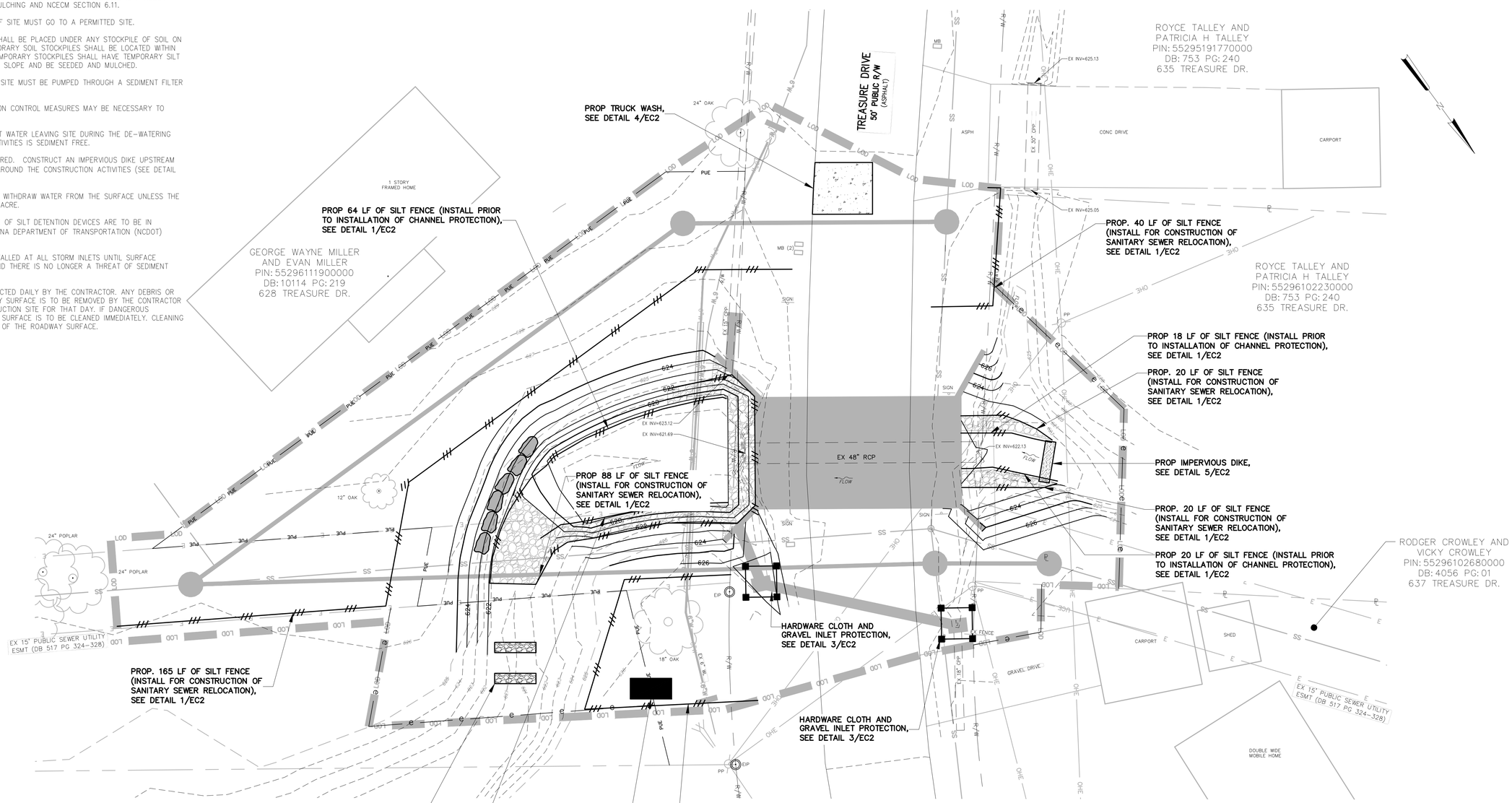

PLAN

1"=10'

TOTAL DISTURBANCE AREA
0.32 ACRES

Know what's below. Call before you dig.

1"=10'-0" 10 5 0 10' HORIZONTAL

NO.	ISSUED FOR	DATE	BY

DESIGNED SRS
DRAWN AKL
CHECKED JNS
PROJ. ENGR. SRS
APPROVED

NORTH CAROLINA PROFESSIONAL SEAL 18179 ENGINEER JAMES N. STRUSE 10/8/15

NORTH CAROLINA PROFESSIONAL SEAL 24126 ENGINEER STEPHEN R. SANDS

Hazen

HAZEN AND SAWYER
4944 Parkway Plaza Blvd #375, Charlotte, NC 28217
(704) 357-3150

Concord NORTH CAROLINA High Performance Living

TREASURE DRIVE
STORM WATER IMPROVEMENTS

EROSION AND SEDIMENT CONTROL

PLAN

THE SCALE BAR SHOWN BELOW MEASURES ONE INCH LONG ON THE ORIGINAL DRAWING.

DATE OCTOBER 2015
H & S JOB NUMBER 32180-002
CONTRACT NUMBER
DRAWING NUMBER EC1

ISSUED FOR BIDDING

20151009 10:45A O:\32180-CHA\32180-002\Drawings\CIVIL\EC1.dwg By:JGREENE Last Saved By: jgreene XREFs= O:\32180-CHA\32180-002\Drawings\Block\31280-002-TB,O:\32180-CHA\32180-002\Drawings\BASE\32180-002-BASE,O:\32180-CHA\32180-002\Drawings\BASE\32180-002-3D

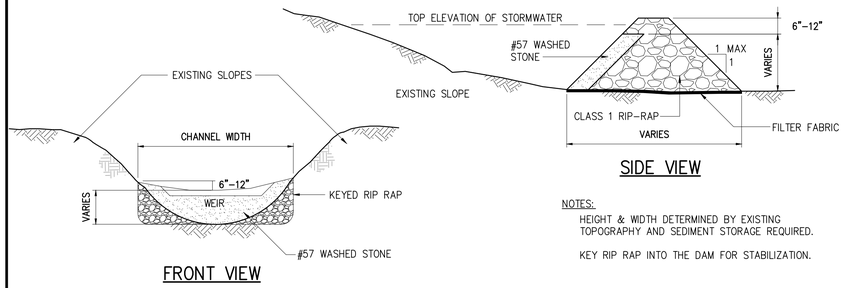

NOTES:

HEIGHT & WIDTH DETERMINED BY EXISTING TOPOGRAPHY AND SEDIMENT STORAGE REQUIRED.

KEY RIP RAP INTO THE DAM FOR STABILIZATION.

CHECK DAM

0227029

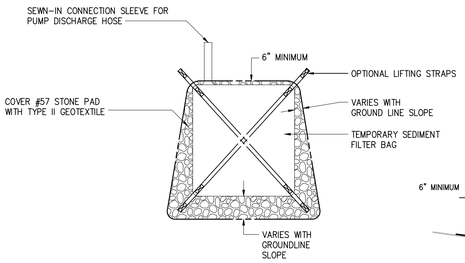

NOTES:

1. CONTRACTOR SHALL EXERCISE CAUTION NOT TO BURST OR DAMAGE THE TEMPORARY SEDIMENT FILTER BAG WHEN PUMPING.
2. THE LENGTH AND WIDTH OF THE TEMPORARY SEDIMENT BAG SHALL BE PER NCDOT SPECIFICATIONS SECTION 1639.
3. TEMPORARY SEDIMENT FILTER BAGS SHALL BE EQUIPPED WITH A SEWN–IN SLEEVE OF SUFFICIENT SIZE TO ACCEPT A MINIMUM FOUR–INCH DIAMETER PUMP DISCHARGE HOSE. THE DISCHARGE HOSE SHOULD BE EXTENDED INTO THIS SLEEVE A MINIMUM OF SIX INCHES AND BE TIGHTLY SECURED WITH A HOSE CLAMP OR OTHER SUITABLE MEANS TO PREVENT LEAKAGE. HOSE CONNECTION THROUGH A SLIT IN THE BAG WILL NOT BE ACCEPTABLE.
4. THE PUMP DISCHARGE HOSE CONNECTION SLEEVE SHALL BE SECURELY TIED OFF DURING DISPOSAL OF THE TEMPORARY SEDIMENT FILTER BAG IN ORDER TO PREVENT LEAKAGE OF COLLECTED SEDIMENTS.
5. CONTRACTOR SHALL USE ADEQUATE SIZE EQUIPMENT TO DUMP/DISPOSE OF FILLED BAG.
6. PROVIDE STABILIZED OUTLET TO STREAM BANK. WOOD PALLETS MAY BE USED IN LIEU OF STONE AND GEOTEXTILE AS DIRECTED. A SUFFICIENT NUMBER OF PALLETS MUST BE PROVIDED TO ELEVATE THE ENTIRE SEDIMENT FILTER BAG ABOVE NATURAL GROUND.

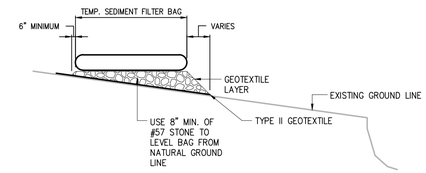

TEMPORARY SEDIMENT FILTER BAG

0227038

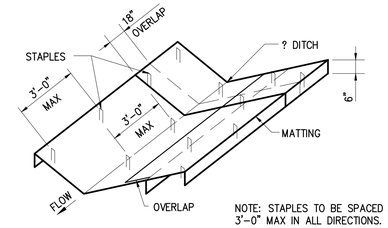

NOTE: STAPLES TO BE SPACED AT 3'–0" MAX IN ALL DIRECTIONS.

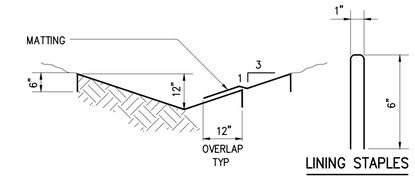

ROADSIDE EROSION CONTROL MANAGEMENT AND TURF REINFORCEMENT MATTING INSTALLATION

0227014

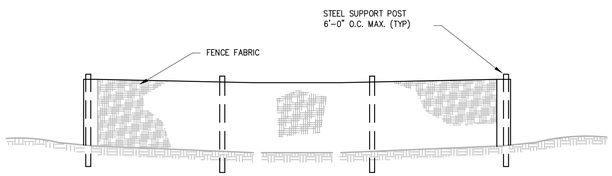

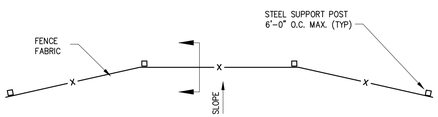

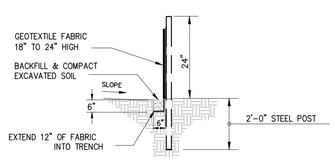

NOTE:
1. POSTS SHALL BE MIN 48" HIGH STRENGTH STEEL WITH MIN. YIELD STRENGTH OF 50,000 psi.
2. POSTS SHALL WEIGH 1.25 lbs/ft (+– 8%)
3. POSTS SHALL HAVE A SOIL STABILIZATION PLATE WITH MIN. CROSS SECTIONAL AREA OF 17 sq.in. AND COMPOSED OF MIN. 15G STEEL
4. STANDARD "T" SECTION WITH A NOMINAL FACE WIDTH OF 1.38" AND "T" LENGTH OF 1.48"
5. HEAVY DUTY PLASTIC TIES FOR STEEL POSTS

SILT FENCE

DETAIL	1
NO SCALE	EC2

NOTES:
1. ALL EXCAVATION SHALL BE PERFORMED IN ONLY DRY OR ISOLATED SECTIONS OF CHANNEL.
2. IMPERVIOUS DIKES ARE TO BE USED TO ISOLATE WORK FROM STREAM FLOW.
3. ALL GRADED AREAS SHALL BE STABILIZED WITHIN 24 HOURS.
4. MAINTENANCE OF STREAM FLOW OPERATIONS SHALL BE INCIDENTAL TO THE WORK. THIS INCLUDES POLYETHYLENE SHEETING, DIVERSION PIPES, PUMPS AND HOSES.
5. PUMPS AND HOSES SHALL BE OF SUFFICIENT SIZE TO DE–WATER THE WORK AREA.
6. IMPERVIOUS DIKE SHALL BE MADE OF THE FOLLOWING MATERIALS: SHEET PILES, SAND BAGS, OR PLACEMENT OF CLASS A RIPRAP LINED WITH POLYPROPYLENE OR OTHER IMPERVIOUS GEOTEXTILE, EARTHEN MATERIAL SHALL NOT BE USED TO CONSTRUCT AN IMPERVIOUS DIKE.
7. THE CONTRACTOR IS TO OBSERVE THE LOCAL WEATHER FORECASTS AND NOT BEGIN WORK IN THE CREEK UNLESS AT LEAST THREE DAYS WITHOUT RAIN IS ANTICIPATED.
8. ALL DISTURBED CREEK AND STREAM BANKS SHALL BE STABILIZED AT THE END OF EACH DAY.

SEQUENCE OF CONSTRUCTION FOR TYPICAL WORK AREA

1. INSTALL SEDIMENT FILTER (SPECIAL STILLING BASIN/SEDIMENT CONTROL BAG/SILT BAG/DEWATERING BAG).
2. INSTALL UPSTREAM PUMP AND TEMPORARY FLEXIBLE HOSE.
3. PLACE UPSTREAM IMPERVIOUS DIKE AND BEGIN PUMPING OPERATIONS FOR STREAM DIVERSION.
4. PLACE DOWNSTREAM IMPERVIOUS DIKE AND PUMPING APPARATUS. DE–WATER ENTRAPPED AREA.
5. PERFORM CULVERT REPLACEMENT ACCORDANCE WITH THE PLANS.
6. EXCAVATE ANY ACCUMULATED SILT AND DE–WATER BEFORE REMOVAL OF IMPERVIOUS DIKES. REMOVE IMPERVIOUS DIKES, PUMPS, AND TEMPORARY FLEXIBLE HOSE (DOWNSTREAM IMPERVIOUS DIKES FIRST).
7. ALL GRADING AND STABILIZATION MUST BE COMPLETED IN A MAXIMUM OF 5 DAYS WITHIN THE PUMP AROUND AREAS BETWEEN THE IMPERVIOUS DIKES. THE IMPERVIOUS DIKE LOCATIONS AS SHOWN ON THIS SHEET ONLY SHOW THE UPPER AND LOWER EXTENT OF WORK FOR EACH STREAM SEGMENT. THE CONTRACTOR IS RESPONSIBLE FOR DETERMINING THE LOCATION OF THE IMPERVIOUS DIKE(S).
8. REMOVE SEDIMENT FILTER AND STABILIZE DISTURBED AREA WITH SEED AND MULCH.

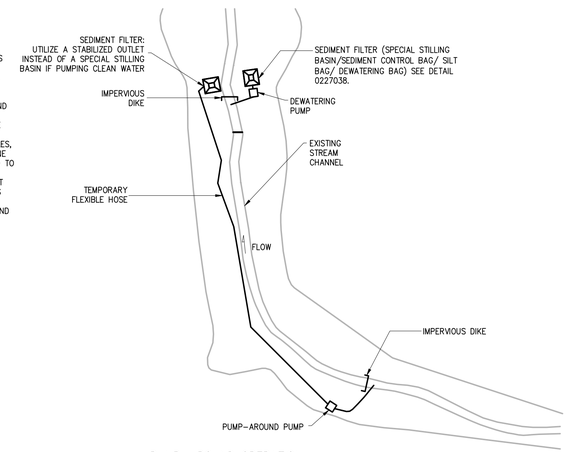

PUMP–AROUND OPERATION

DETAIL	2
NO SCALE	EC2

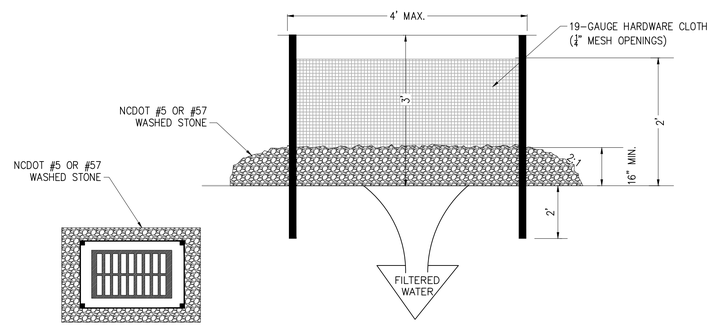

HARDWARE CLOTH AND GRAVEL INLET PROTECTION

DETAIL	3
NO SCALE	EC2

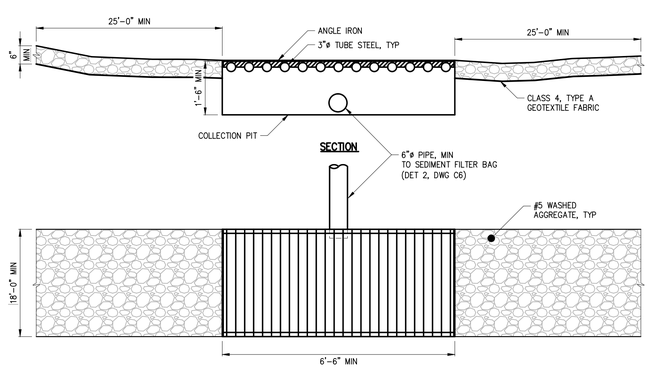

TRUCK WASH

DETAIL	4
3/8" = 1'–0"	EC2

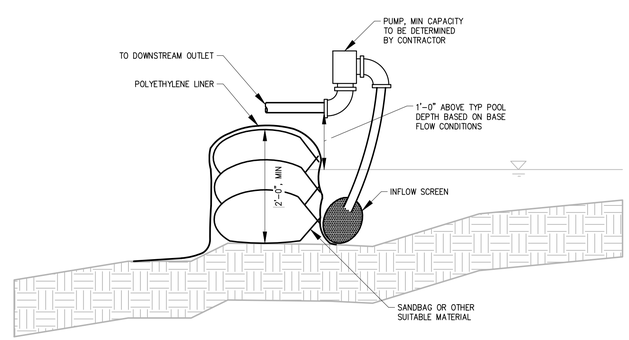

IMPERVIOUS DIKE

DETAIL	5
3/8" = 1'–0"	EC2

Know what's below. Call before you dig.

NO.	ISSUED FOR	DATE	BY

DESIGNED SRS
DRAWN AKL
CHECKED JNS
PROJ. ENGR. SRS
APPROVED

NORTH CAROLINA PROFESSIONAL SEAL 18179 ENGINEER JAMES N. STRUNK 10/8/15

NORTH CAROLINA PROFESSIONAL SEAL 036 ENGINEER STEPHEN R. SANDS

Hazen

HAZEN AND SAWYER
4944 Parkway Plaza Blvd #375, Charlotte, NC 28217
(704) 357-3150

Concord NORTH CAROLINA High Performance Living

TREASURE DRIVE
STORM WATER IMPROVEMENTS

EROSION AND SEDIMENT CONTROL

EROSION DETAILS

THE SCALE BAR SHOWN BELOW MEASURES ONE INCH LONG ON THE ORIGINAL DRAWING.

DATE OCTOBER 2015
H & S JOB NUMBER 32180-002
CONTRACT NUMBER
DRAWING NUMBER EC2

ISSUED FOR BIDDING

20151009 10:45A O:\32180-CHA\32180-002\Drawings\CIVIL\EC2.dwg By:JCREENE Last Saved By: jgreene XREFs= O:\32180-CHA\32180-002\Drawings\Tblock\31280-002-TB...\BASE\C-D1

GENERAL STRUCTURAL NOTES

G-1 THESE NOTES ARE GENERAL AND SUPPLEMENT THE PROJECT SPECIFICATIONS; THE NCDOT STANDARD SPECIFICATIONS FOR ROADS AND STRUCTURES; AND THE NORTH CAROLINA BUILDING CODE. THESE NOTES APPLY TO THE ENTIRE PROJECT UNLESS MODIFIED OR NOTED OTHERWISE IN THE CONTRACT DOCUMENTS.

G-2 THE CONTRACTOR SHALL BE RESPONSIBLE FOR VERIFYING ALL EXISTING INFORMATION IN THE FIELD AS REQUIRED.

G-3 IF A CONFLICT IS FOUND BETWEEN DIFFERENT PORTIONS OF THE CONTRACT DOCUMENTS, THE CONTRACTOR SHALL NOTIFY THE ENGINEER IMMEDIATELY. CONTINUED CONSTRUCTION OF THE AREA IN CONFLICT SHALL BE AT THE CONTRACTOR'S OWN RISK UNTIL THE CONFLICT IS RESOLVED.

G-4 NO BACKFILL SHALL BE PLACED AGAINST ANY SUBSTRUCTURE WALLS UNLESS ALL ADJACENT SUPPORTING ELEMENTS HAVE ACHIEVED DESIGN STRENGTH, OR WALLS HAVE BEEN PROPERLY BRACED, AND IN ANY CASE NOT SOONER THAN 28 DAYS AFTER THE PLACING OF CONCRETE UNLESS APPROVED BY THE ENGINEER. SUPPORTING ELEMENTS SHALL INCLUDE ADJACENT WALLS AND SLABS.

PRECAST CONCRETE

PC-1 REINFORCED PRECAST CONCRETE ARCH CULVERTS, MANHOLES AND VAULTS SHALL BE DESIGNED BY A PROFESSIONAL ENGINEER CURRENTLY REGISTERED IN THE STATE OF NORTH CAROLINA. STRUCTURAL DRAWINGS AND CALCULATIONS SHALL BEAR THE ENGINEER'S SEAL AND SHALL INDICATE DESIGN IS IN COMPLIANCE WITH THE AASHTO "STANDARD SPECIFICATIONS FOR HIGHWAY BRIDGES" HL 93 LOADING, AND THE NCDOT STANDARD SPECIFICATIONS SECTION 1077.

PC-2 JOINTS IN PRECAST CONCRETE SHALL COMPLY WITH THE REQUIREMENTS OF ASTM C990.

PC-3 REINFORCED PRECAST CONCRETE ARCH CULVERT SHALL BE CON/SPAN BRIDGE SYSTEMS BY CONTECH ENGINEERED SOLUTIONS LLC OR APPROVED EQUAL. REFER TO GENERAL CONDITIONS ARTICLE 6.5 OF PROJECT SPECIFICATIONS FOR ALTERNATE SUBMITTAL REQUIREMENTS. CONTRACTOR SHALL COORDINATE CULVERT FOUNDATION CONNECTION/GEOMETRY, JOINT SEALING AND BACKFILL REQUIREMENTS WITH CULVERT MANUFACTURER REQUIREMENTS AND THE PROJECT SPECIFICATIONS. SUBMIT ARCH CULVERT SUPPORT REACTIONS FOR THE PURPOSES OF FOUNDATION VERIFICATION.

FOUNDATIONS

F-1 CONCRETE (CAST-IN-PLACE) NOTES APPLY TO FOUNDATIONS.

F-2 ALLOWABLE SOIL BEARING PRESSURE = 5000 PSF

F-3 MINIMUM DEPTH FROM ADJACENT FINISHED GRADE TO BOTTOM OF FOUNDATION = 18 INCHES.

F-4 SOFT OR LOOSE SOILS MAY BE ENCOUNTERED DURING EARTHWORK OPERATIONS, REQUIRING ADDITIONAL UNDERCUTTING AND FILL.

CONCRETE (CAST-IN-PLACE)

C-1 DESIGN OF CONCRETE ELEMENTS INCLUDING WALLS, FORMED SLABS, BEAMS, AND COLUMNS IS IN ACCORDANCE WITH ACI 318 (CODE REQUIREMENTS FOR STRUCTURAL CONCRETE) AND NCDOT STANDARD SPECIFICATIONS FOR ROADS AND STRUCTURES.

C-2 CONCRETE SHALL BE CLASS AA (4500 PSI) IN ACCORDANCE WITH NCDOT SPECIFICATIONS SECTION 1000

C-3 CONCRETE CONSTRUCTION SHALL BE IN ACCORDANCE WITH NCDOT SPECIFICATIONS SECTION 420 – CONCRETE STRUCTURES.

C-4 ALL BAR REINFORCING SHALL CONFORM TO NCDOT STANDARD SPECIFICATIONS SECTION 425 – FABRICATING AND PLACING REINFORCEMENT.

C-5 CONCRETE COVER FOR REINFORCING (UNLESS NOTED OTHERWISE ON THE DRAWINGS):

A)	CONCRETE DEPOSITED DIRECTLY AGAINST SOIL:	3"
B)	CONCRETE EXPOSED TO WEATHER (#5 OR SMALLER):	1 1/2"
	CONCRETE EXPOSED TO WEATHER (#6 OR LARGER):	2"
C)	SLABS:	1 1/2"
	AT SURFACES CONTACTING WATER	2"
D)	WALLS 12" OR MORE:	2"
	WALLS LESS THAN 12" (#5 OR SMALLER):	1 1/2"
	WALLS LESS THAN 12" (#6 OR LARGER):	2"

C-6 SPLICES SHALL BE CLASS 'B' AS INDICATED IN THE SPLICE LENGTH TABLE IN THE STANDARD DETAILS.

C-7 CONSTRUCTION JOINTS SHALL BE LOCATED AS SHOWN ON THE DRAWINGS. CONSTRUCTION JOINTS NOT SHOWN SHALL BE SUBMITTED BY THE CONTRACTOR FOR THE APPROVAL OF THE ENGINEER PRIOR TO SUBMITTING REBAR SHOP DRAWINGS. VERTICAL CONSTRUCTION JOINTS IN WALLS AND HORIZONTAL JOINTS IN SLABS SHALL BE PROVIDED AT A SPACING NOT GREATER THAN 45 FEET ON CENTER. FOR EXPOSED WALLS WITH FLUID OR EARTH ON THE OPPOSITE SIDE, THE SPACING BETWEEN VERTICAL AND HORIZONTAL JOINTS SHALL BE A MAXIMUM OF 25 FEET.

C-8 WHERE HORIZONTAL CONSTRUCTION JOINTS, LOCATED ABOVE THE FOUNDATION SLAB, EXTEND BEYOND WHERE NEEDED, THEY SHALL BE TERMINATED AT A VERTICAL CONSTRUCTION JOINT APPROVED BY THE ENGINEER.

C-9 SLABS WITH SLOPING SURFACES SHALL HAVE THE INDICATED SLAB THICKNESS MAINTAINED AS THE MINIMUM. SLAB BOTTOMS CAN EITHER SLOPE WITH THE TOP SURFACE OR BE LEVEL. REINFORCEMENT IN SLABS WITH SLOPING SURFACES SHALL BE PLACED AT THE REQUIRED CLEARANCE FROM THE SLAB SURFACE.

C-10 ALL EXPOSED CORNERS SHALL HAVE A 3/4" CHAMFER OR A 1/2" RADIUS TOOLED CORNER.

C-11 EQUIPMENT SUPPORTS, ANCHORAGES, OPENINGS, RECESSES AND REVEALS NOT SHOWN ON THE STRUCTURAL DRAWINGS BUT REQUIRED BY OTHER CONTRACT DOCUMENTS, SHALL BE PROVIDED FOR PRIOR TO PLACING CONCRETE.

C-12 REINFORCING BARS AND ACCESSORIES SHALL NOT BE IN CONTACT WITH ANY METAL PIPE, PIPE FLANGE, METAL CONDUIT, OR OTHER METAL PARTS EMBEDDED IN CONCRETE. A MINIMUM CLEARANCE OF 2" SHALL BE PROVIDED.

C-13 DOWELS, ANCHOR BOLTS, PIPES AND OTHER EMBEDDED ITEMS SHALL BE HELD SECURELY IN POSITION WHILE CONCRETE IS BEING PLACED.

C-14 PIPES AND OTHER SIMILAR ITEMS EMBEDDED IN OR PENETRATING THROUGH CONCRETE SHALL BE SPACED ON CENTER NOT LESS THAN 3 TIMES THEIR OUTSIDE DIMENSION, BUT NOT LESS THAN 2 1/2" CLEAR. WHEN SUCH ITEMS ARE EMBEDDED IN WALLS OR SLABS, THEY SHALL NOT OCCUPY MORE THAN 1/3 OF THE MEMBER THICKNESS.

C-15 AT ALL TYPICAL CURBS, EQUIPMENT PADS, AND PIPE SUPPORT PIERS, REINFORCING DOWELS SHOWN MAY BE REPLACED WITH MATCHING DOWELS SET IN EPOXY IN DRILLED HOLES AS SPECIFIED. DOWELS LOCATED CLOSER THAN 3" FROM ANY EDGE OF CONCRETE SHALL NOT BE REPLACED WITH DRILLED DOWELS.

C-16 DRILLED ADHESIVE DOWELS (WHERE DOWELS ARE SHOWN TO BE PLACED INTO HARDENED CONCRETE):

A) DOWEL ADHESIVE SYSTEM SHALL BE EPCON G5 EPOXY ADHESIVE BY ITW RED HEAD OR APPROVED EQUAL. SUBMIT PROPOSED ADHESIVE DOWEL SYSTEM FOR APPROVAL PRIOR TO CONSTRUCTION.
B) THE HOLE DIAMETER SHALL BE NO LARGER THAN 1/8" GREATER THAN THE DIAMETER OF THE REINFORCING BAR AT THE DEFORMATIONS.
C) THE DEPTH OF EMBEDMENT SHALL BE 12 BAR DIAMETERS, UNLESS NOTED OTHERWISE.
D) ADJUST THE DOWEL LOCATIONS AS NEEDED TO AVOID DRILLING THROUGH ANY REINFORCING BARS. IF THE LOCATION NEEDS TO BE MODIFIED, CONTACT THE ENGINEER.
E) ADHESIVE DOWELS SHALL BE PLACED A MINIMUM OF 4" FROM THE EDGE OF ANY CONCRETE.

C-17 CLEAR DISTANCE FROM ANCHOR BOLTS TO ANY CONCRETE EDGE SHALL BE 4" MINIMUM UNLESS NOTED OTHERWISE.

C-18 CONCRETE COMPRESSIVE STRENGTH TESTS SHALL BE AVAILABLE ON THE JOB SITE FOR REVIEW BY THE ENGINEER.

C-19 PROVIDE SMOOTH RUBBED FINISH ON ALL EXPOSED CONCRETE.

NO.	ISSUED FOR	DATE	BY

DESIGNED ADO
DRAWN ADO/CSW
CHECKED
PROJ. ENGR. SRS
APPROVED

NORTH CAROLINA PROFESSIONAL SEAL 18179 ENGINEER JAMES N. STRUVE 10/8/15

NORTH CAROLINA PROFESSIONAL SEAL 26530 ENGINEER ADAM D. OVERBAY 10/8/15

Hazen
HAZEN AND SAWYER
4944 Parkway Plaza Blvd #375, Charlotte, NC 28217
(704) 357-3150

Concord NORTH CAROLINA High Performance Living

TREASURE DRIVE
STORM WATER IMPROVEMENTS

STRUCTURAL
GENERAL NOTES

THE SCALE BAR SHOWN BELOW MEASURES ONE INCH LONG ON THE ORIGINAL DRAWING.

DATE OCTOBER 2015
H & S JOB NUMBER 32180-002
CONTRACT NUMBER
DRAWING NUMBER S1

ISSUED FOR BIDDING

NOTES:

1. OPENINGS THROUGH THE REINFORCED PRECAST CONCRETE ARCH CULVERT SHALL BE COORDINATED WITH THE SITE PLAN AND CIVIL REQUIREMENTS. THE CONTRACTOR SHALL COORDINATE OPENING GEOMETRY AND LOCATION THROUGH PRECAST MEMBERS WITH THE PRECAST MANUFACTURER. ALL OPENING REQUIREMENTS SHALL BE NOTED ON THE PRECAST SHOP DRAWINGS AND DETAILED IN THE PRECAST CONCRETE CALCULATIONS. FIELD CUTTING OF PRECAST UNITS IS NOT ALLOWED.

2. DOWEL ADHESIVE SHALL BE THE EPCON G5 SYSTEM BY ITW RED HEAD OR APPROVED EQUAL. SUBMIT ADHESIVE PRODUCT FOR APPROVAL PRIOR TO CONSTRUCTION.

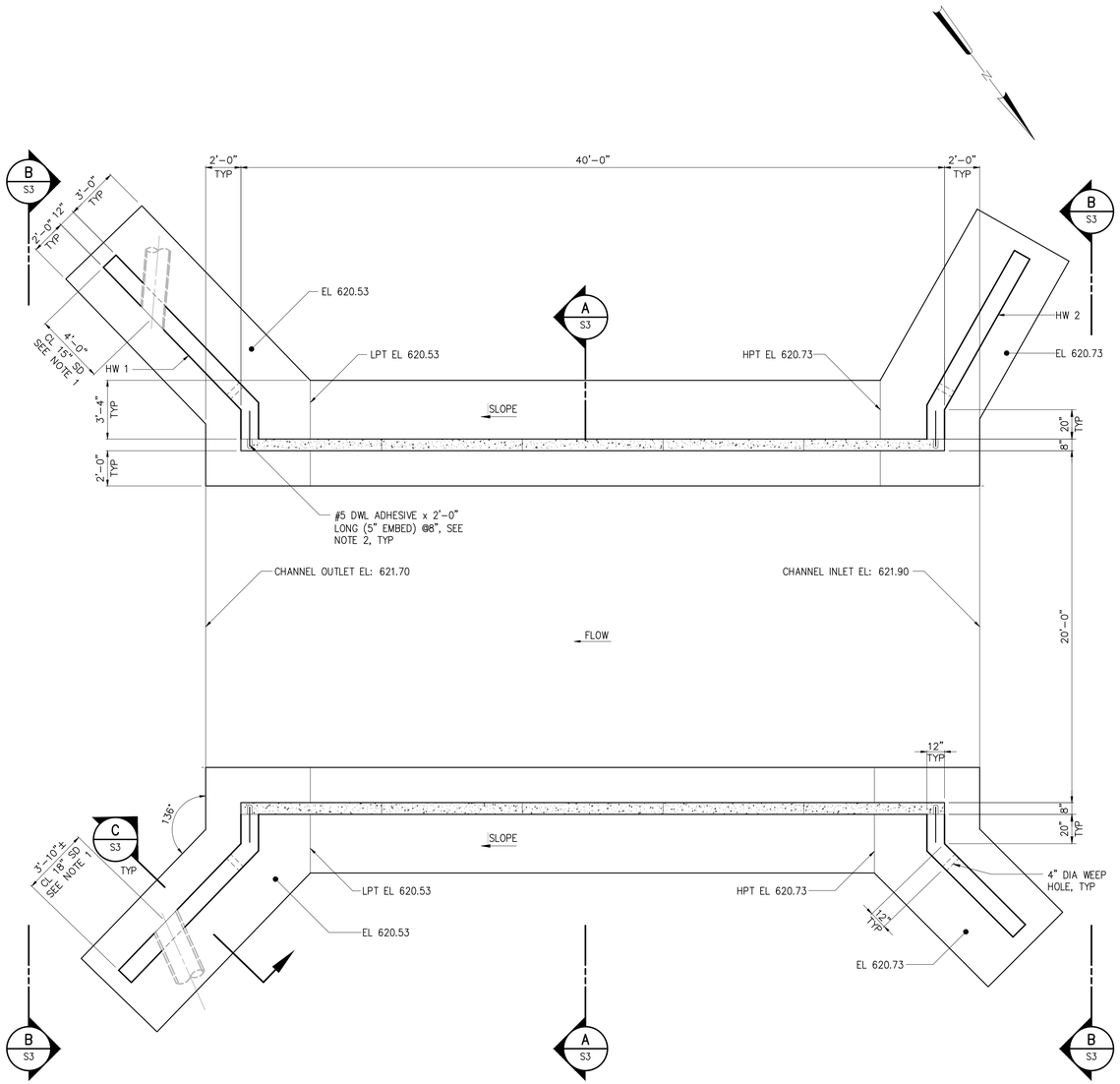

BOTTOM PLAN

1/4"=1'-0"

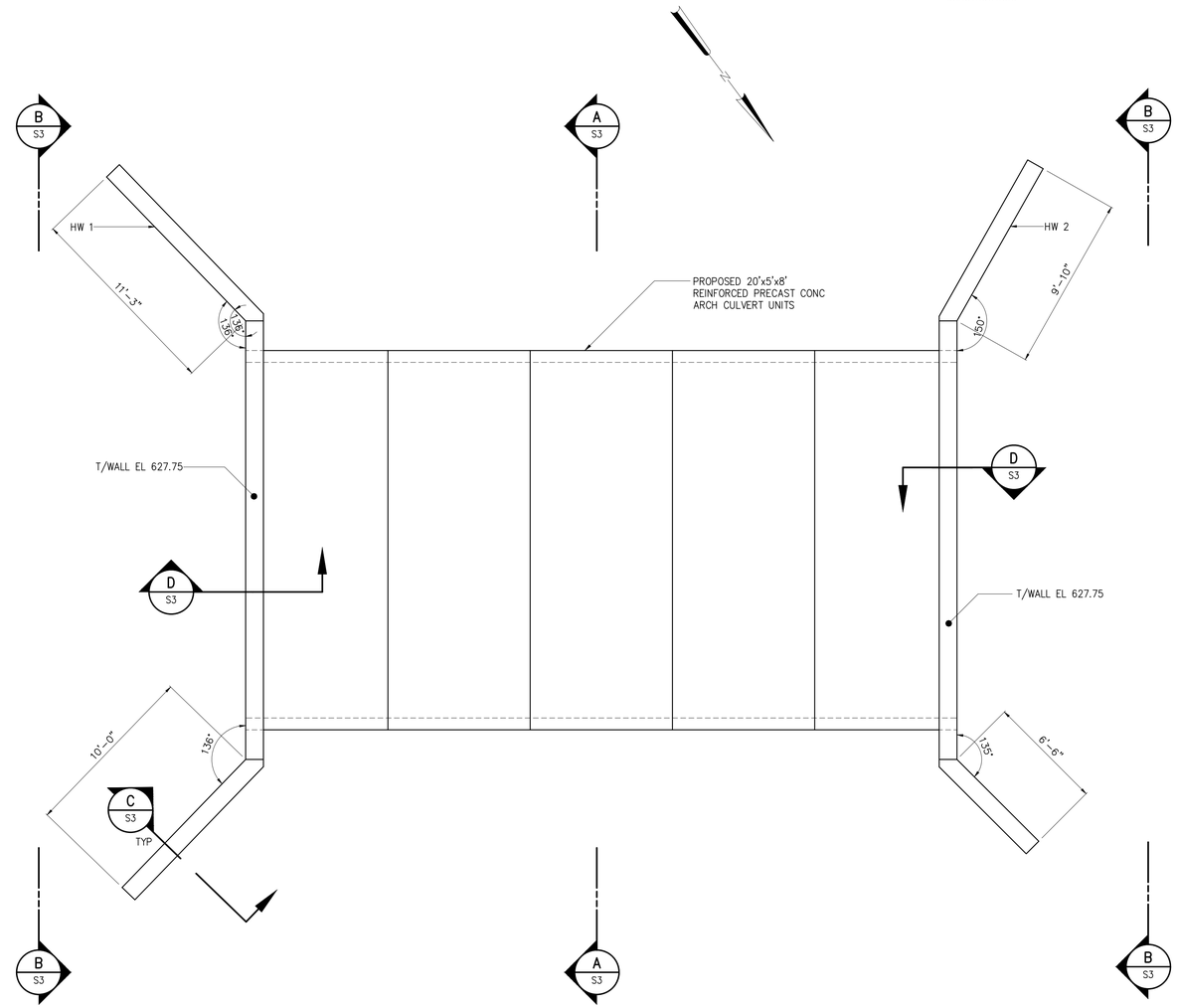

TOP PLAN

1/4"=1'-0"

NO.	ISSUED FOR	DATE	BY

DESIGNED ADO
DRAWN ADO/CSW
CHECKED
PROJ. ENGR. SRS
APPROVED

NORTH CAROLINA PROFESSIONAL SEAL 18179 ENGINEER JAMES N. STRUNK 10/8/15

NORTH CAROLINA PROFESSIONAL SEAL 26530 ENGINEER ADAM D. OVERBAY 10/8/15

Hazen

HAZEN AND SAWYER
4944 Parkway Plaza Blvd #375, Charlotte, NC 28217
(704) 357-3150

Concord NORTH CAROLINA High Performance Living

TREASURE DRIVE
STORM WATER IMPROVEMENTS

HEADWALL
STRUCTURAL
PLANS

THE SCALE BAR SHOWN BELOW MEASURES ONE INCH LONG ON THE ORIGINAL DRAWING.

DATE OCTOBER 2015
H & S JOB NUMBER 32180-002
CONTRACT NUMBER
DRAWING NUMBER S2

ISSUED FOR BIDDING

20151009 10:45A O:\32180-CHA\32180-002\Drawings\STRU\S2.dwg By:JGREENE Last Saved By: jgreene XREFs= ..\Tblock\32180-002-TB,..\BASE\VW-S-FBL,..\BASE\VW-S-PT

NOTES:

1. THE GEOTECHNICAL ENGINEER SHALL VERIFY THE SUITABILITY OF THE SUBGRADE FOR BEARING PRIOR TO PLACING CONCRETE. THE FOOTINGS SHALL BEAR 12", MINIMUM, INTO ROCK IN ORDER TO PROTECT AGAINST SCOUR AS NOTED IN THE GEOTECHNICAL ENGINEERING REPORT.
2. MINIMUM CONTROLLED BACKFILL EXTENTS SHOWN, COORDINATE FINAL CONTROLLED FILL EXTENTS WITH REINFORCED PRECAST CONCRETE ARCH CULVERT MANUFACTURER REQUIREMENTS.
3. REINFORCED PRECAST CONCRETE ARCH CULVERT SECTION SHALL BE DESIGNED TO SUPPORT HEADWALL INDICATED IN SECTION D/S3. FORCES APPLIED TO THE HEADWALL INCLUDE LATERAL EARTH AND ASSOCIATED SURCHARGE.
4. GEOTEXTILE FABRIC SHALL BE TYPE 2 IN ACCORDANCE WITH NCDOT STANDARD SPECIFICATIONS.
5. CONTROLLED BACKFILL SHALL BE AASHTO GROUP A1, A2, A3 OR A4 AS RECOMMENDED BY THE REINFORCED PRECAST CONCRETE ARCH CULVERT MANUFACTURER.

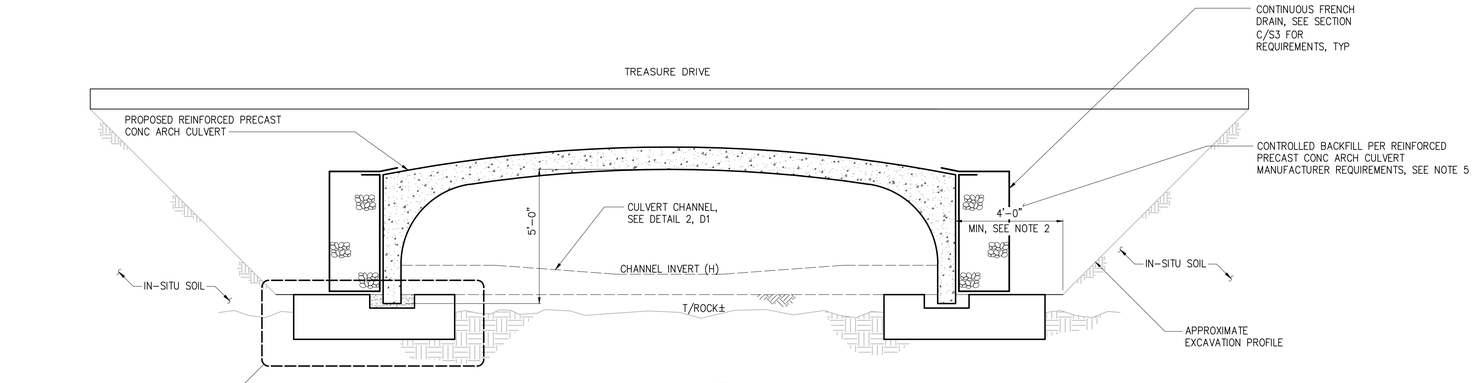

SECTION A / S2
3/8" = 1'-0"

HEADWALL ELEVATIONS		
POINT	HW 1 (DS)	HW 2 (US)
A	626.00	625.00
B	627.50	627.50
C	627.75	627.75
D	627.75	627.75
E	627.50	627.50
F	624.00	627.00
G	620.53	620.73
H	621.70	621.90

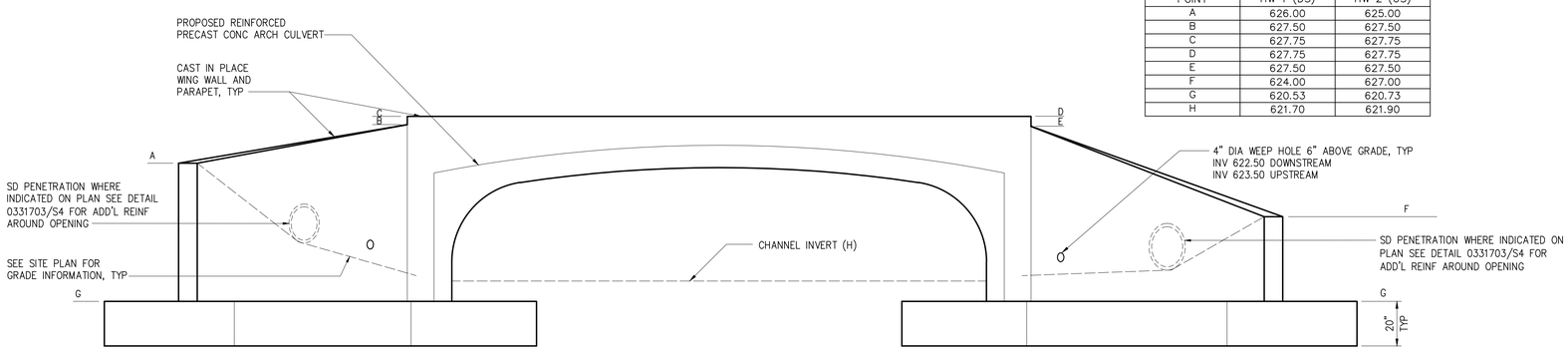

SECTION B / S2
3/8" = 1'-0"

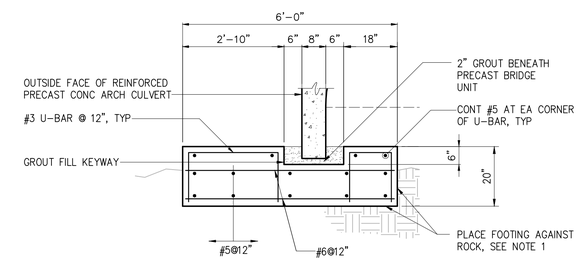

DETAIL 1 / S3
1/2" = 1'-0"

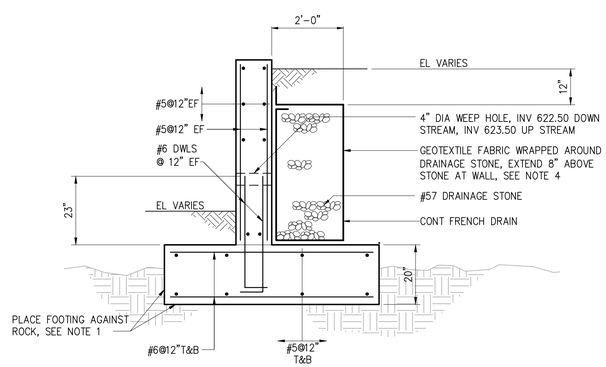

SECTION C / S2
1/2" = 1'-0"

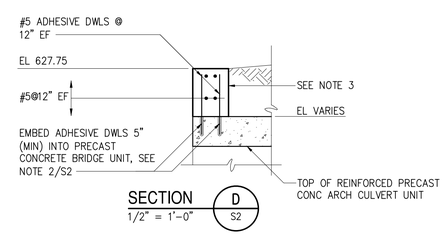

SECTION D / S2
1/2" = 1'-0"

Know what's below. Call before you dig.

NO.	ISSUED FOR	DATE	BY

DESIGNED ADO
DRAWN ADO/CSW
CHECKED
PROJ. ENGR. SRS
APPROVED

NORTH CAROLINA PROFESSIONAL SEAL 18179 ENGINEER JAMES N. STRUNK 10/8/15

NORTH CAROLINA PROFESSIONAL SEAL 26530 ENGINEER ADAM D. OVERBAY 10/8/15

Hazen
HAZEN AND SAWYER
4944 Parkway Plaza Blvd #375, Charlotte, NC 28217
(704) 357-3150

Concord NORTH CAROLINA High Performance Living

TREASURE DRIVE
STORM WATER IMPROVEMENTS

HEADWALL
STRUCTURAL
SECTIONS AND DETAILS

THE SCALE BAR SHOWN BELOW MEASURES ONE INCH LONG ON THE ORIGINAL DRAWING.

DATE OCTOBER 2015
H & S JOB NUMBER 32180-002
CONTRACT NUMBER
DRAWING NUMBER S3

ISSUED FOR BIDDING

20151009 10:45A O:\32180-CHA\32180-002\Drawings\STRU\S3.dwg By:JGREENE Last Saved By: jgreene XREFs= ..\Tblock\32180-002-TB,..\BASE\HW-S01,..\BASE\HW-S02,..\BASE\HW-S03,..\BASE\HW-S05

DEVELOPMENT LENGTH OF STANDARD HOOKS

FOR BARS IN TENSION

fy = 60,000 psi fc' = 4000 psi OR GREATER

BAR SIZE	DEVELOPMENT LENGTH, ℓdh	
	BASIC	W/ CONC COVER *
#3	8"	6"
#4	10"	7"
#5	1'-0"	9"
#6	1'-3"	11"
#7	1'-5"	1'-0"
#8	1'-7"	1'-2"
#9	1'-10"	1'-4"
#10	2'-1"	1'-6"
#11	2'-3"	1'-7"

* SIDE COVER NORMAL TO PLANE OF HOOK AT LEAST 2 1/2"; AND FOR 90° HOOK, END COVER BEYOND OUTSIDE END OF HOOK AT LEAST 2".

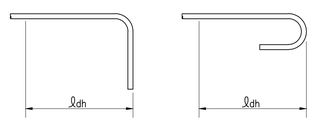

BASIC DEVELOPMENT LENGTH AND SPLICE LENGTH

FOR BARS IN TENSION

** BASED ON MATERIALS AND CONDITIONS AS FOLLOWS:

fy = 60,000 psi fc' = 4000 psi OR GREATER
UNCOATED BARS NORMAL WEIGHT CONCRETE
CLEAR COVER ≥ 1.5 INCHES

BASIC DEVELOPMENT LENGTH ℓd				BAR SIZE	CLASS B SPLICE LENGTH 1.3 x ℓd			
CLEAR SPACING ≥ 3"		CLEAR SPACING < 3"			CLEAR SPACING ≥ 3"		CLEAR SPACING < 3"	
BASIC	TOP *	BASIC	TOP *		BASIC	TOP *	BASIC	TOP *
1'-0"	1'-0"	1'-0"	1'-4"	# 3	1'-0"	1'-3"	1'-4"	1'-8"
1'-0"	1'-3"	1'-7"	2'-1"	# 4	1'-3"	1'-8"	2'-1"	2'-9"
1'-3"	1'-7"	2'-4"	3'-0"	# 5	1'-7"	2'-0"	3'-0"	3'-11"
1'-6"	1'-11"	3'-1"	4'-0"	# 6	1'-11"	2'-5"	4'-0"	5'-2"
2'-5"	3'-1"	4'-11"	6'-4"	# 7	3'-1"	4'-0"	6'-4"	8'-3"
3'-0"	3'-11"	6'-0"	7'-9"	# 8	3'-11"	5'-1"	7'-9"	10'-1"
3'-8"	4'-9"	6'-9"	8'-9"	# 9	4'-9"	6'-3"	8'-9"	11'-4"
4'-6"	5'-10"	7'-7"	9'-10"	# 10	5'-10"	7'-7"	9'-10"	12'-9"
5'-5"	7'-0"	8'-5"	10'-11"	# 11	7'-0"	9'-1"	10'-11"	14'-2"

* TOP REINFORCEMENT IS HORIZONTAL REINFORCEMENT SO PLACED THAT MORE THAN 12 INCHES OF FRESH CONCRETE IS CAST IN THE MEMBER BELOW THE REINFORCEMENT.

** FOR MATERIALS OR CONDITIONS DIFFERENT FROM THOSE STATED, LENGTHS SHOWN IN CHART SHALL BE MODIFIED TO CONFORM TO THE PROVISIONS OF ACI 318, SECTION 12.2.

NOTES:

1. THIS DETAIL APPLIES FOR OPENINGS 8"ø AND LARGER. FOR SMALLER OPENINGS, BEND BARS OR ADJUST SPACING OF REINFORCEMENT TO AVOID OPENING.
2. PLACE EXTRA BARS OF THE SAME SIZE AS THE INTERRUPTED BARS AT EACH SIDE OF OPENING. QUANTITY OF EXTRA BARS AT EACH SIDE SHALL EQUAL HALF THE QUANTITY OF INTERRUPTED BARS EXCEPT WHERE NOTED OTHERWISE.
3. PROVIDE ONE DIAGONAL BAR EACH SIDE OF OPENING WITH SIZE EQUAL TO MAIN REINFORCEMENT, TYPICAL EACH FACE.
4. WHERE INVERT OF OPENING IN WALL IS LESS THAN 44 BAR DIAMETERS FROM TOP OF SLAB, EXTRA REINFORCEMENT ON EACH SIDE SHALL INCLUDE DOWELS EMBEDDED INTO SLAB WITH STANDARD 90 DEGREE HOOKS TO SPLICE WITH EXTRA VERTICAL REINFORCEMENT. DOWELS SHALL ALSO STILL BE PROVIDED BELOW OPENING.
5. WHERE INVERT OF OPENING IN WALL OR SLAB IS CLOSER THAN 44 BAR DIAMETERS TO EDGE OF SLAB OR BOTTOM OF WALL, EXTRA DIAGONAL BARS MAY BE TERMINATED TWO INCHES FROM EDGE OF SLAB OR BOTTOM OF WALL. DOWELS DO NOT HAVE TO BE PROVIDED TO SPLICE WITH DIAGONAL BARS.

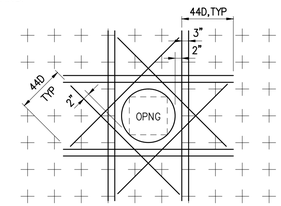

TYPICAL REINF AT OPENINGS

0331703

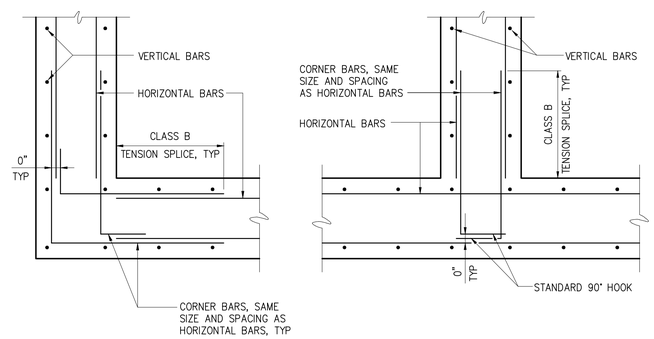

CORNER INTERSECTION

TYPICAL WALL REINFORCING

0331700R

NOTES

1 JOINTS SHALL BE FORMED BY AN APPROVED JOINT INSERT. SAWCUTTING OF JOINTS WILL NOT BE ALLOWED.
2 DEPTH SHALL BE 1 1/2" IN REINF CONC DEPTH SHALL BE 1/3 OF CONCRETE THICKNESS IN UNREINFORCED CONCRETE PAVEMENT.

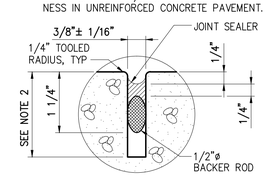

TYPICAL SEALED JOINT

0325101

Know what's below. Call before you dig.

NO.	ISSUED FOR	DATE	BY

DESIGNED ADO
DRAWN ADO/CSW
CHECKED
PROJ. ENGR. SRS
APPROVED

NORTH CAROLINA PROFESSIONAL SEAL 18179 ENGINEER JAMES N. STRUNK 10/8/15

NORTH CAROLINA PROFESSIONAL SEAL 26530 ENGINEER ADAM D. OVERBAY 10/8/15

Hazen
HAZEN AND SAWYER
4944 Parkway Plaza Blvd #375, Charlotte, NC 28217
(704) 357-3150

Concord NORTH CAROLINA High Performance Living

TREASURE DRIVE
STORM WATER IMPROVEMENTS

HEADWALL
STRUCTURAL
STANDARD DETAILS

THE SCALE BAR SHOWN BELOW MEASURES ONE INCH LONG ON THE ORIGINAL DRAWING.

DATE OCTOBER 2015
H & S JOB NUMBER 32180-002
CONTRACT NUMBER
DRAWING NUMBER S4

ISSUED FOR BIDDING

20151009 10:45A O:\32180-CHA\32180-002\Drawings\STRU\S4.dwg By:JGREENE Last Saved By: tbarnes XREFs= ..\Tblock\32180-002-TB,..\BASE\HW-S01,..\BASE\HW-S02,..\BASE\HW-S03,..\BASE\HW-S05

GENERAL NOTES:

1. REFER TO DWG X1 FOR GENERAL NOTES, PROJECT NOTES, AND CONSTRUCTION PHASING FOR THIS PROJECT.

2. TEMPORARY CONCRETE BARRIERS SHALL BE INSTALLED WHEN TRENCH CANNOT BE BACKFILLED.

3. DROP OFF PROTECTION FENCING SHALL BE PLACED AROUND OPEN TRENCH.

4. WORK ON RESIDENTIAL STREETS SHALL NOT OCCUR BEFORE 9 AM OR AFTER 4 PM UNLESS APPROVED BY ENGINEER.

5. THE CONTRACTOR SHALL COORDINATE DRIVEWAY ACCESS WITH EACH PROPERTY OWNER AS CONSTRUCTION PROGRESSES.

6. THE MUTCD SIGN IDENTIFICATION CODE IS PROVIDED IN PARENTHESIS.

LEGEND:

- SIGN
- TYPE III BARRICADE(S)
- CONSTRUCTION AREA

1"=100'-0" 100 50 0 100'

Know what's below. Call before you dig.

NO.	ISSUED FOR	DATE	BY

DESIGNED SRS
DRAWN AKL
CHECKED JNS
PROJ. ENGR. SRS
APPROVED

NORTH CAROLINA PROFESSIONAL SEAL 18179 ENGINEER JAMES N. STRUVE 10/8/15

NORTH CAROLINA PROFESSIONAL SEAL 19761 ENGINEER STEPHEN R. SANDS

Hazen

HAZEN AND SAWYER
4944 Parkway Plaza Blvd #375, Charlotte, NC 28217
(704) 357-3150

Concord NORTH CAROLINA High Performance Living

TREASURE DRIVE
STORM WATER IMPROVEMENTS

TRAFFIC CONTROL

DETOUR PLAN

THE SCALE BAR SHOWN BELOW MEASURES ONE INCH LONG ON THE ORIGINAL DRAWING.

DATE OCTOBER 2015
H & S JOB NUMBER 32180-002
CONTRACT NUMBER
DRAWING NUMBER TC1

ISSUED FOR BIDDING

20151009 10:46A D:\32180-CHA\32180-002\Drawings\CIVIL\TC1.dwg By:JGREENE Last Saved By: jgreene XREFs= D:\32180-CHA\32180-002\Drawings\Tblock\31280-002-TB,D:\32180-CHA\32180-002\Drawings\BASE\32180-002-TAXMAP

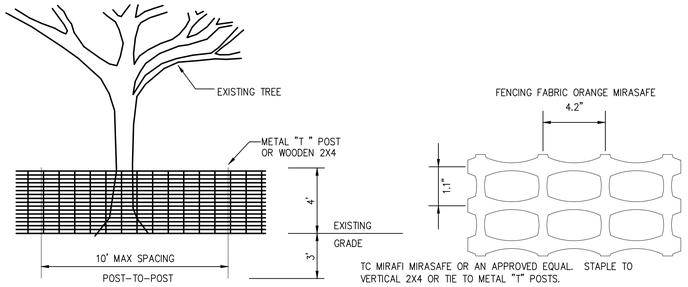

NOTES:
1. PLACE CONTINUOUS RUN OF FENCE MATERIAL ON BOTH SIDES OF IMMEDIATE WORK ZONE IN WOODED AREAS AS SHOWN ON THE PLANS. DO NOT ATTACH FENCE MATERIAL TO TREES.
2. TREE PROTECTION FENCING FABRIC TO BE PLACED AT THE DRIP LINE OF THE TREES THAT ARE TO BE PROTECTED.
3. "MIRASAFE" HIGH STRENGTH POLYMER GEOGRID FABRIC BY MIRAFI CONSTRUCTION PRODUCTS, PENDERGRASS, GEORGIA.
4. ONE SIGN PER 300' OF TREE PROTECTION FENCING SHALL READ: "TREE PROTECTION AREA/DO NOT ENTER AREA/PARA PROTECCION DE LOS ARBOLES/PROHIBIDO ENTRAR"

MAINTENANCE REQUIREMENTS:
1. INSPECT WEEKLY AND AFTER EACH RAINFALL PRODUCING $\frac{1}{2}$ INCH OR MORE OF RAIN.
2. REPAIR OR RELACE DAMAGED FENCING IMMEDIATELY.
3. REPLACE ANY DAMAGED SIGNAGE IMMEDIATELY AS NEEDED.
4. IF ROOTS ARE DAMAGED, CUT OFF DAMAGED AREAS AND PAINT WITH TREE PAINT. SPREAD PEAT MOSS OR MOIST TOPSOIL OVER EXPOSED ROOTS.
5. REPAIR DAMAGE TO BARK BY TRIMMING AROUND THE DAMAGED AREA, TAPERING CUT TO PROVIDE DRAINAGE. PAINT WITH TREE PAINT.

TREE PROTECTION BARRIER FENCE
0227033

STRAW BALE BARRIER CONCRETE WASHOUT

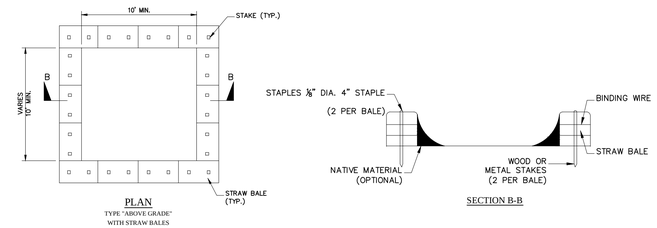

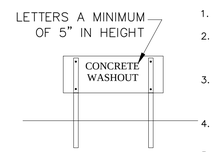

CONCRETE WASHOUT SIGN DETAIL

NOTES:
1. ACTUAL LAYOUT DETERMINED IN FIELD.
2. INSTALL CONCRETE WASHOUT SIGN (24"X24", MINIMUM) WITHIN 30' OF THE TEMPORARY CONCRETE WASHOUT FACILITY.
3. TEMPORARY WASHOUT AREA MUST BE AT LEAST 50' FROM A STORM DRAIN, CREEK BANK OR PERIMETER CONTROL.
4. CLEAN OUT CONCRETE WASHOUT AREA WHEN 50% FULL.
5. THE KEY TO FUNCTIONAL CONCRETE WASHOUTS IS WEEKLY INSPECTIONS, ROUTINE MAINTENANCE, AND REGULAR CLEAN OUT.
6. SILT FENCE SHALL BE INSTALLED AROUND PERIMETER OF CONCRETE WASHOUT AREA EXCEPT FOR THE SIDE UTILIZED FOR ACCESSING THE WASHOUT.
7. A ROCK CONSTRUCTION ENTRANCE MAY BE NECESSARY ALONG ONE SIDE OF THE WASHOUT TO PROVIDE VEHICLE ACCESS.

CONCRETE WASHOUT STRAW BALES OR ABOVE GROUND

DETAIL	4
NTS	D1

EXCAVATED PIT CONCRETE WASHOUT

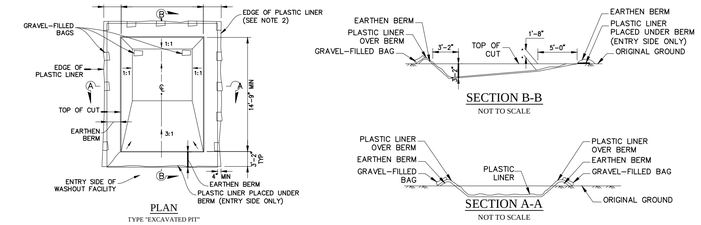

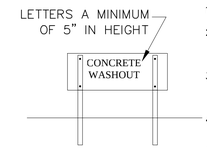

CONCRETE WASHOUT SIGN DETAIL

NOTES:
1. ACTUAL LAYOUT DETERMINED IN FIELD.
2. INSTALL CONCRETE WASHOUT SIGN (24"X24", MINIMUM) WITHIN 30' OF THE TEMPORARY CONCRETE WASHOUT FACILITY.
3. TEMPORARY WASHOUT AREA MUST BE AT LEAST 50' FROM A STORM DRAIN, CREEK BANK OR PERIMETER CONTROL.
4. CLEAN OUT CONCRETE WASHOUT AREA WHEN 50% FULL.
5. THE KEY TO FUNCTIONAL CONCRETE WASHOUTS IS WEEKLY INSPECTIONS, ROUTINE MAINTENANCE, AND REGULAR CLEAN OUT.
6. SILT FENCE SHALL BE INSTALLED AROUND PERIMETER OF CONCRETE WASHOUT AREA EXCEPT FOR THE SIDE UTILIZED FOR ACCESSING THE WASHOUT.
7. A ROCK CONSTRUCTION ENTRANCE MAY BE NECESSARY ALONG ONE SIDE OF THE WASHOUT TO PROVIDE VEHICLE ACCESS.

CONCRETE WASHOUT EXCAVATED PIT

DETAIL	5
NTS	D1

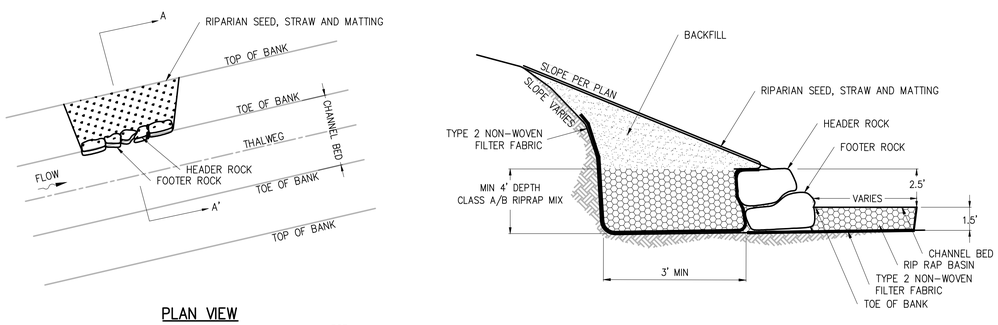

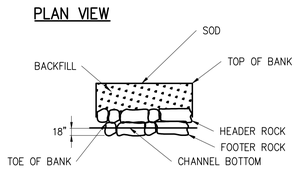

NOTES:
1. ROCK TOE PROTECTION SHALL CONSIST OF TWO ROWS OF STACKED ROCKS. THE ROCKS SHALL BE FLAT-SIDED WITH A MINIMUM SIZE OF 3'x3'x2'. ROCKS SHALL BE INSTALLED 18" MINIMUM BELOW THE STREAM BED.
2. CLASS A/B RIPRAP MIX SHALL BE USED TO CHINK THE VOIDS BETWEEN AND BEHIND THE STACKED ROCKS.
3. BACKFILL SHALL BE PLACED ON TOP OF ROCKS AND CLASS A/B RIPRAP MIX. BACKFILL SHALL BE PREDOMINANTLY CLAY AND INSTALLED AND COMPACTED IN 6"LIFTS.
4. TYPE 2 FILTER FABRIC SHALL BE PLACED UNDER ROCK TOE PROTECTION.
5. CLASS A/B RIPRAP MIX SHALL BE 50% CLASS A RIPRAP AND 50% CLASS B RIRRAP BY WEIGHT.

ROCK TOE PROTECTION

DETAIL	1
NO SCALE	D1

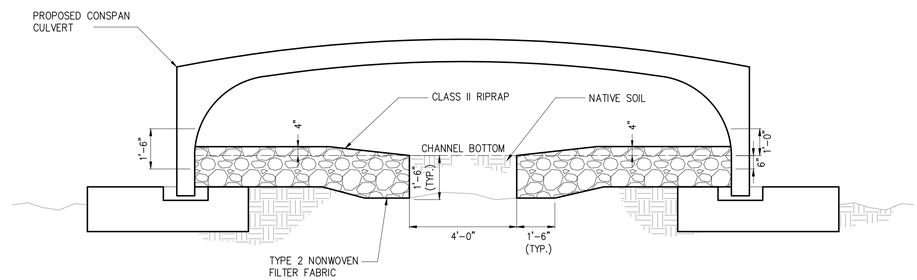

CULVERT CHANNEL

DETAIL	2
3/8" = 1'-0"	D1

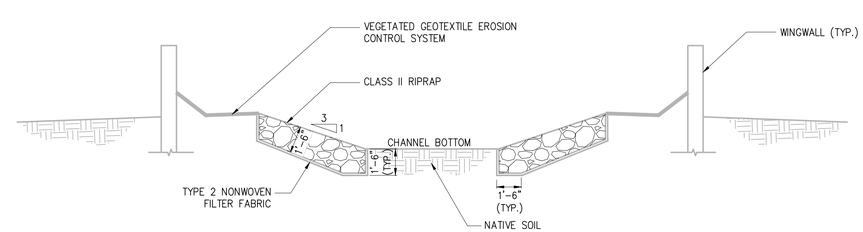

CHANNEL PROTECTION

DETAIL	3
3/8" = 1'-0"	D1

Know what's below. Call before you dig.

NO.	ISSUED FOR	DATE	BY

DESIGNED SRS
DRAWN AKL
CHECKED JNS
PROJ. ENGR. SRS
APPROVED

NORTH CAROLINA PROFESSIONAL SEAL 18179 ENGINEER JAMES N. STRUNK 8/15

NORTH CAROLINA PROFESSIONAL SEAL 22108 ENGINEER STEPHEN R. SANDS

Hazen
HAZEN AND SAWYER
4944 Parkway Plaza Blvd #375, Charlotte, NC 28217
(704) 357-3150

Concord NORTH CAROLINA High Performance Living

TREASURE DRIVE
STORM WATER IMPROVEMENTS

MISCELLANEOUS DETAILS

THE SCALE BAR SHOWN BELOW MEASURES ONE INCH LONG ON THE ORIGINAL DRAWING.

DATE OCTOBER 2015
H & S JOB NUMBER 32180-002
CONTRACT NUMBER
DRAWING NUMBER D1

ISSUED FOR BIDDING

20151009 10:46A O:\32180-CHA\32180-002\Drawings\SDETAILS\D1.dwg By:JGREENE Last Saved By: jgreene XREFs= H:\30475\STD-DWG\ditch_xing,H:\30475\STD-DWG\FlpRap_ckdam,H:\30475\STD-DWG\silt_fence,H:\30475\STD-DWG\straw_bale,H:\30475\STD-DWG\RESTRAINEDJOINTDETAIL,O:\32180-CHA\32180-002\Drawings\Block\31280-002-TB,.\BASE\HW-S04

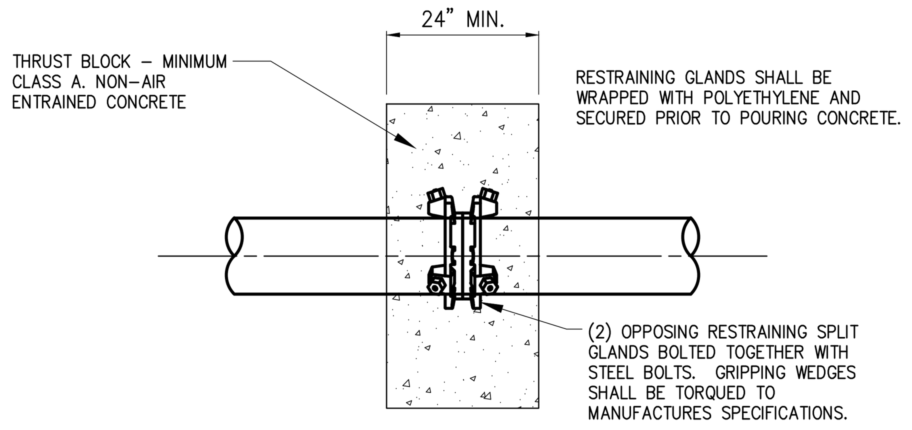

PLAN VIEW

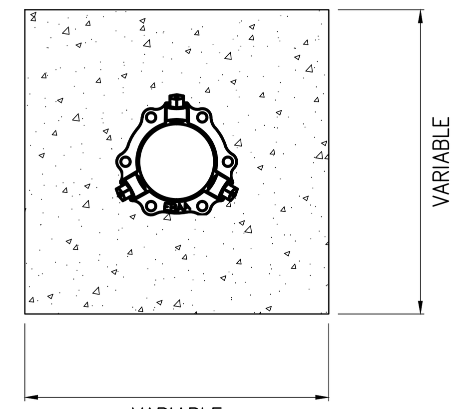

FRONT VIEW

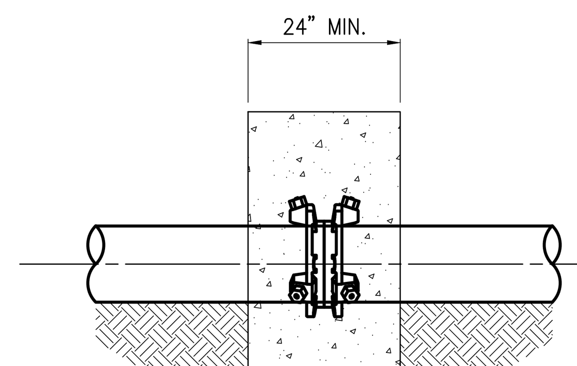

PROFILE VIEW

MINIMUM CUBIC YARDS OF CONCRETE REQUIRED			
PIPE DIAMETER	150 PSI TEST PRESSURE	200 PSI TEST PRESSURE	250 PSI TEST PRESSURE
6"	0.75	1.0	1.25
8"	1.5	2.0	2.25
10"	2.0	3.0	3.5
12"	3.0	4.0	5.0
16"	5.5	7.25	9.0

NOTES:
1. EXTEND ADJACENT GATE VALVE RODDING INTO DEADMAN.
2. THRUST BLOCK SHALL BE ORIENTED APPROXIMATELY CENTER OF PIPE JOINT.
3. *OPTIONAL* A WELDED COLLAR (INSTALLED BY PIPE MANUFACTURER) MAY BE USED IN LIEU OF RESTRAINING GLANDS. ALL OTHER DESIGN REQUIREMENTS SHALL APPLY AS SHOWN.
4. FOR PIPES LARGER THAN 16" DIAMETER, THE DEADMAN THRUST RESTRAINT WITH BLOCKING MUST BE DESIGNED AND SEALED BY A NC PROFESSIONAL ENGINEER.
5. ANY PROPOSED MODIFICATIONS TO THIS STANDARD BASED ON THE FIELD CONDITIONS MUST BE PRE=APPROVED BY THE CITY OF CONCORD FIELD INSPECTOR AND/OR THE ENGINEER OF RECORD.
6. QUANTITIES SHOWN BELOW ARE TO THE NEAREST QUARTER YARD AND ARE BASED ON MINIMUM MASS WEIGHT REQUIREMENTS OF THE TEST PRESSURES SHOWN.

DEADMAN THRUST RESTRAINT W/ MASS WEIGHT BLOCKING

DETAIL 1
NO SCALE D2

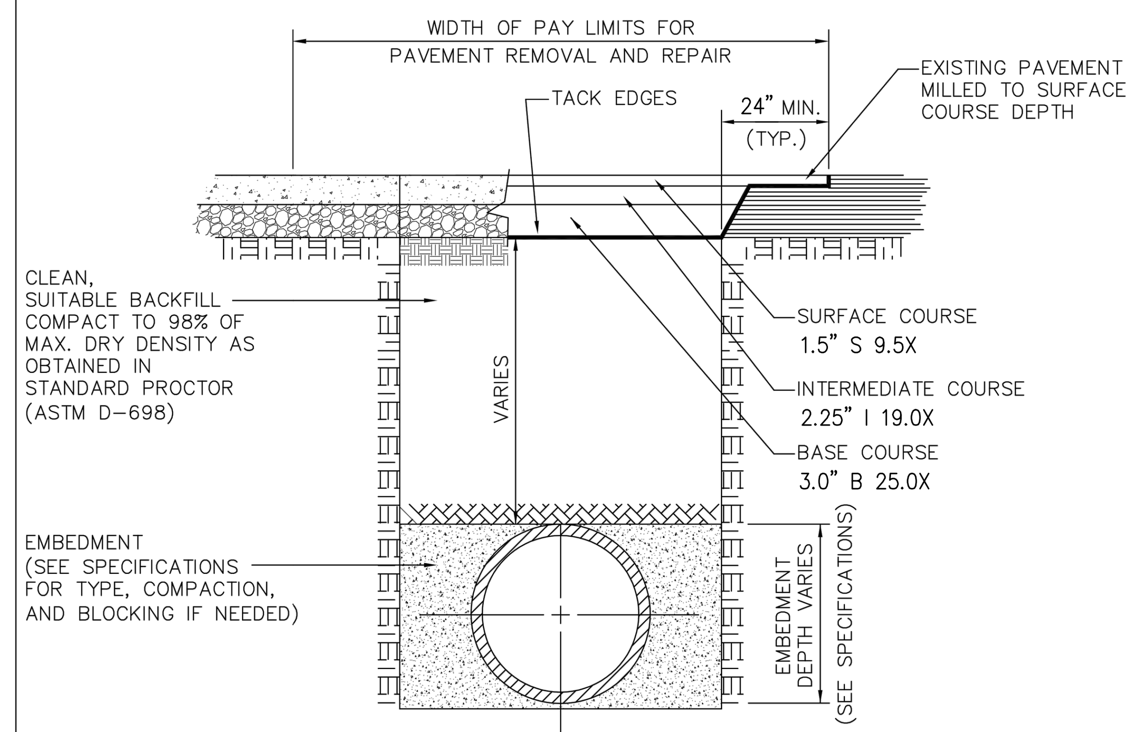

1. NEW PAVEMENT SHALL HAVE SECTION THICKNESS DESIGNED TO NCDOT SUPERPAVE STANDARDS AS PROVIDED BY ENGINEER OR MATCH EXISTING CONSTRUCTION, WHICH EVER IS GREATER OR AS SPECIFIED BY THE CONTRACT DOCUMENTS.
2. TRENCH IS TO BE BACKFILLED IN COMPACTED 6" LAYERS BEFORE PAVEMENT REPAIRS ARE MADE.
3. REFER TO EARTHWORK SPECIFICATIONS FOR EMBEDMENT AND FILL REQUIREMENTS.
4. THIS DETAIL SHOWS ASPHALT PAVEMENT REPLACEMENT. THE WIDTH OF PAY LIMITS SHALL APPLY TO STONE AND CONCRETE PAVEMENT AS WELL.

CONCORD NORTH CAROLINA a city meeting the future... | UTILITY CUT REPLACEMENT

No.	Date	By	REVISION
1	10/29/07	JEC	REVISED FROM WSACC

Drawn By:	Checked By:	Approved By:	Date	Sht	of
JEC	PLK	MSH	10/07		

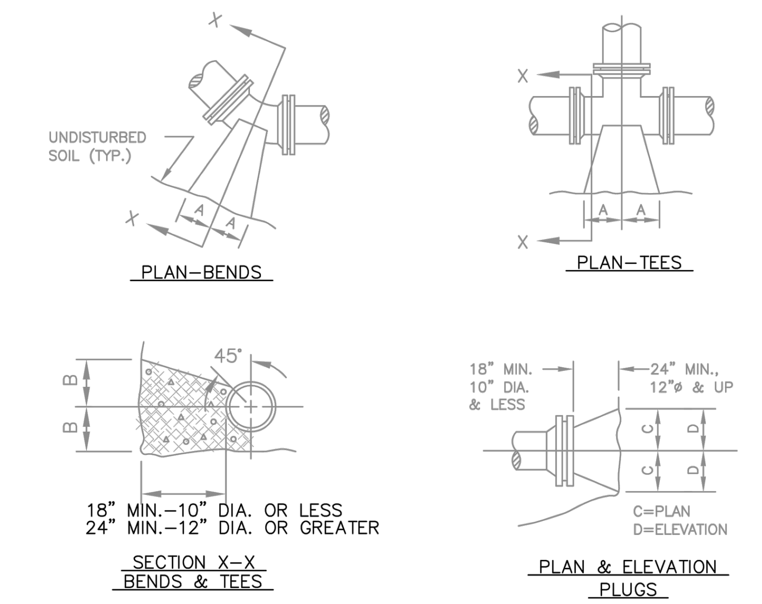

PIPE SIZE	90° BEND		45° BEND		22–1/2° BEND		11–1/4° BEND		TEE		PLUG	
	A	B	A	B	A	B	A	B	A	B	C	D
4"	18"	12"	10"	13"	7"	10"	7"	10"	12"	14"	13"	6"
6"	18"	12"	10"	13"	7"	10"	7"	10"	12"	14"	19"	9"
8"	24"	18"	13"	18"	10"	12"	10"	12"	16"	18"	25"	11"
10"	28"	22"	15"	22"	12"	15"	12"	15"	20"	22"	31"	14"
12"	32"	28"	19"	28"	14"	18"	14"	18"	22"	28"	37"	17"
16"	54"	38"	30"	36"	18"	36"	18"	36"	36"	42"	54"	24"
24"	68"	68"	50"	50"	36"	36"	26"	26"	68"	68"	68"	38"

2000 PSF SOIL (SAND & GRAVEL WITH CLAY)

THRUST BLOCKING DETAIL
NOT TO SCALE

NOTES:
1. BASED ON 200 PSI STATIC PRESSURE PLUS AWWA WATER HAMMER ALLOWANCE.
2. ALL BEARING SURFACES TO BE CARRIED TO UNDISTURBED GROUND.
3. THRUST BLOCKS TO BE USED AT ALL LINES OPERATING UNDER PRESSURE.
4. KEEP ALL PIPING JOINTS CLEAR OF CONCRETE THRUST BLOCKS.

Concord NORTH CAROLINA | CITY OF CONCORD STANDARD DETAIL TYPICAL THRUST BLOCK

Drawn By:	Checked By:	Approved By:	Date	Sht	of
SVM	PK	MSH	05/11	1	1

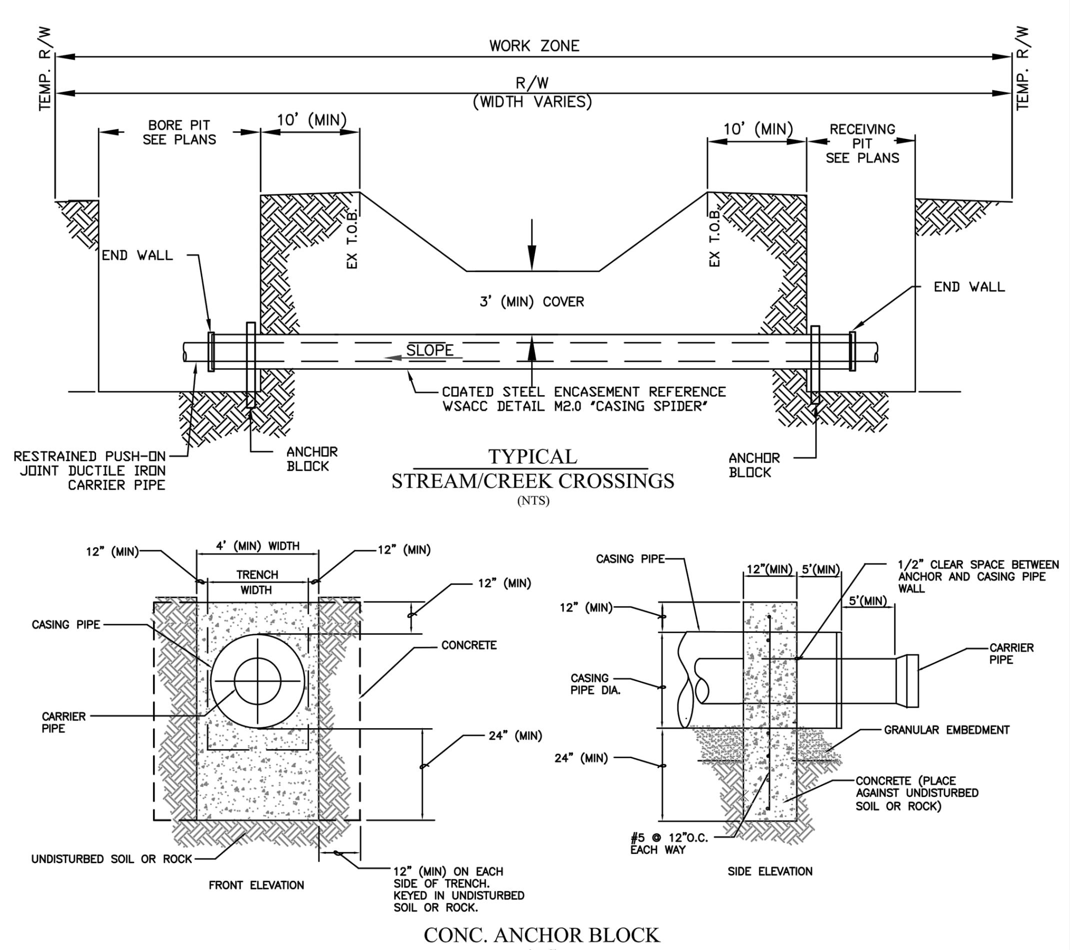

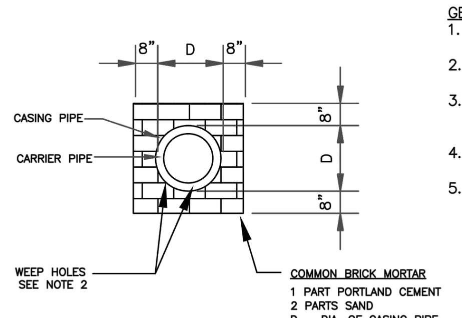

END WALL SECTION
(NTS)

GENERAL NOTES:
1. SEE DRAWINGS FOR LOCATION, SIZE AND LENGTH OF STEEL PIPE CASINGS.
2. INSTALL TWO (2) 1-INCH DRAINS EACH SIDE OF CARRIER PIPE IN DOWNHILL END WALL.
3. THE PIT/TRENCH EXCAVATION SHALL IN NO CASE BE CLOSER THAN 10-FEET FROM THE TOP OF STREAM AND/OR CREEK BANK.
4. RESTRAINED PUSH-ON JOINT DUCTILE IRON CARRIER PIPE SHALL EXTEND THROUGH CASING PIPE ASSEMBLY.
5. SEE WSACC DETAIL M2.0 "CASING SPIDER" FOR CASING PIPE AND SPIDER REQUIREMENTS.

Concord NORTH CAROLINA | CITY OF CONCORD STANDARD DETAIL STREAM/CREEK CROSSING

Drawn By:	Checked By:	Approved By:	Date	Sht	of
SVM	PK	MSH	01/11	1	1

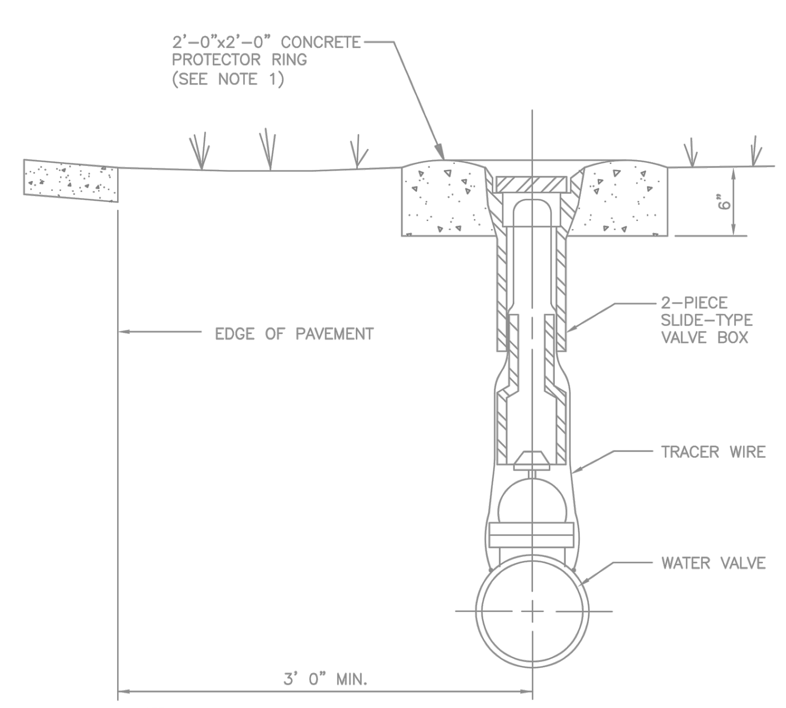

NOTE:
1. USE PROTECTION RING IN SHOULDER OF ROAD.

TYPICAL
VALVE BOX PROTECTION
SCALE: NONE

NOTES:
1. EACH BURIED VALVE TO A DEPTH OF 4 FEET OR LESS SHALL BE PROVIDED WITH A CHARLOTTE FOUNDRY VALVE BOX, OR EQUAL. VALVE BOXES SHALL BE CAST IRON, EXTENSION SLEEVE TYPE, FOR THE DEPTH OF COVER REQUIRED BY THE DRAWINGS. NOT MORE THAN ONE EXTENSION WILL BE ALLOWED WITH EACH SLIDE TYPE VALVE BOX. VALVE BOXES SHALL BE NOT LESS THAN 5 INCHES IN INSIDE DIAMETER, SHALL HAVE A MINIMUM THICKNESS AT ANY POINT OF 3/16 INCH, AND SHALL BE PROVIDED WITH SUITABLE CAST IRON BASES AND COVERS.
2. EACH VALVE BURIED TO A DEPTH GREATER THAN 4 FEET SHALL BE PROVIDED WITH A VALVE BOX CONSISTING OF A CAST IRON COVER AND A 6 INCH CAST IRON PIPE SECTION. THE COVER SHALL BE CLAY & BAILEY "NO. 2193" OR TYLER "SERIES 6890–A". THE PIPE SHAFT SHALL BE SIZED TO EXTEND FROM THE VALVE TO 5 INCHES INSIDE THE VALVE BOX COVER.
3. ALL PARTS OF VALVE BOXES, BASES, AND COVERS SHALL BE SHOP COATED BY DIPPING IN ASPHALT VARNISH.
4. VALVES AND VALVE BOXES SHALL BE SET PLUMB. EACH VALVE BOX SHALL BE PLACED DIRECTLY OVER THE VALVE IT SERVES, WITH THE TOP OF THE BOX BROUGHT FLUSH WITH THE FINISHED GRADE. AFTER BEING PLACED IN PROPER POSITION, EARTHFILL SHALL BE PLACED AROUND EACH VALVE BOX AND THOROUGHLY TAMPED ON EACH SIDE OF THE BOX. THE TOP OF THE BOX SHALL BE SET IN A CONCRETE PROTECTOR RING.

Concord NORTH CAROLINA | CITY OF CONCORD STANDARD DETAIL TYPICAL VALVE BOX

Drawn By:	Checked By:	Approved By:	Date	Sht	of
SVM	PK	MSH	05/11	1	1

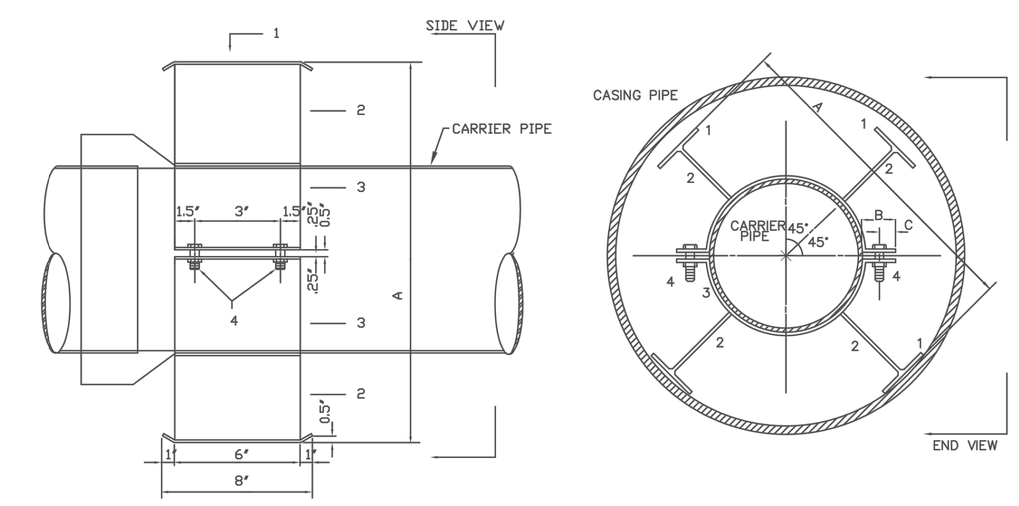

LEGS ROTATED OUT OF POSITION FOR CLARITY

CARRIER PIPE		CASING PIPE				SPIDER DIMENSIONS		
		HIGHWAY		RAILROAD				
NOMINAL DIA.	O. D.	O. D.	WALL	O. D.	WALL	A	B	C
6"	6.90"	12.75"	0.188"	12.75"	0.250"	11"	1 1/4"	5/8"
8"	9.05"	18"	0.250"	18"	0.312"	16 1/2"	2 1/4"	1"
12"	13.20"	24"	0.250"	24"	0.406"	22 1/2"	3"	1 1/4"
16"	17.40"	30"	0.312"	30"	0.500"	28 1/2"	3 1/2"	1 1/2"
24"	25.80"	36"	0.375"	36"	0.5625"	34 1/2"	4"	2"

	PIPE SUPPORT ASSEMBLY MARK NUMBER							
NOMINAL DIA	1		2		3		4	
6"	8" X 2" X 1/4"	PL	6" X 1 1/2" X 1/4"	PL	6" X 1/4"	PL	3/8"	NUT & BOLT
8"	8" X 3" X 1/4"	PL	6" X 3 1/4" X 1/4"	PL	6" X 1/4"	PL	1/2"	NUT & BOLT
12"	8" X 4" X 1/4"	PL	6" X 3 5/8" X 3/8"	PL	6" X 3/8"	PL	1/2"	NUT & BOLT
16"	8" X 4" X 3/8"	PL	6" X 4 3/4" X 3/8"	PL	6" X 3/8"	PL	1/2"	NUT & BOLT
24"	8" X 4" X 3/8"	PL	6" X 5 1/2" X 3/8"	PL	6" X 3/8"	PL	1/2"	NUT & BOLT

NOTES:
1. CARRIER PIPE IS RESTRAINED PUSH–ON JOINT DIP, PROVIDE TWO SPIDERS PER JOINT OF CARRIER PIPE.
2. SPIDERS, NUTS, BOLTS & WASHERS SHALL BE STAINLESS STEEL.
3. ADJUST HEIGHT OF SPIDERS AS NECESSARY TO MAINTAIN SPECIFIED SLOPE.
4. CASING PIPE MATERIAL IS STEEL.

Concord NORTH CAROLINA | CITY OF CONCORD STANDARD DETAIL CASING PIPE SPIDERS

Drawn By:	Checked By:	Approved By:	Date	Sht	of
SVM	PK	MSH	05/11	1	1

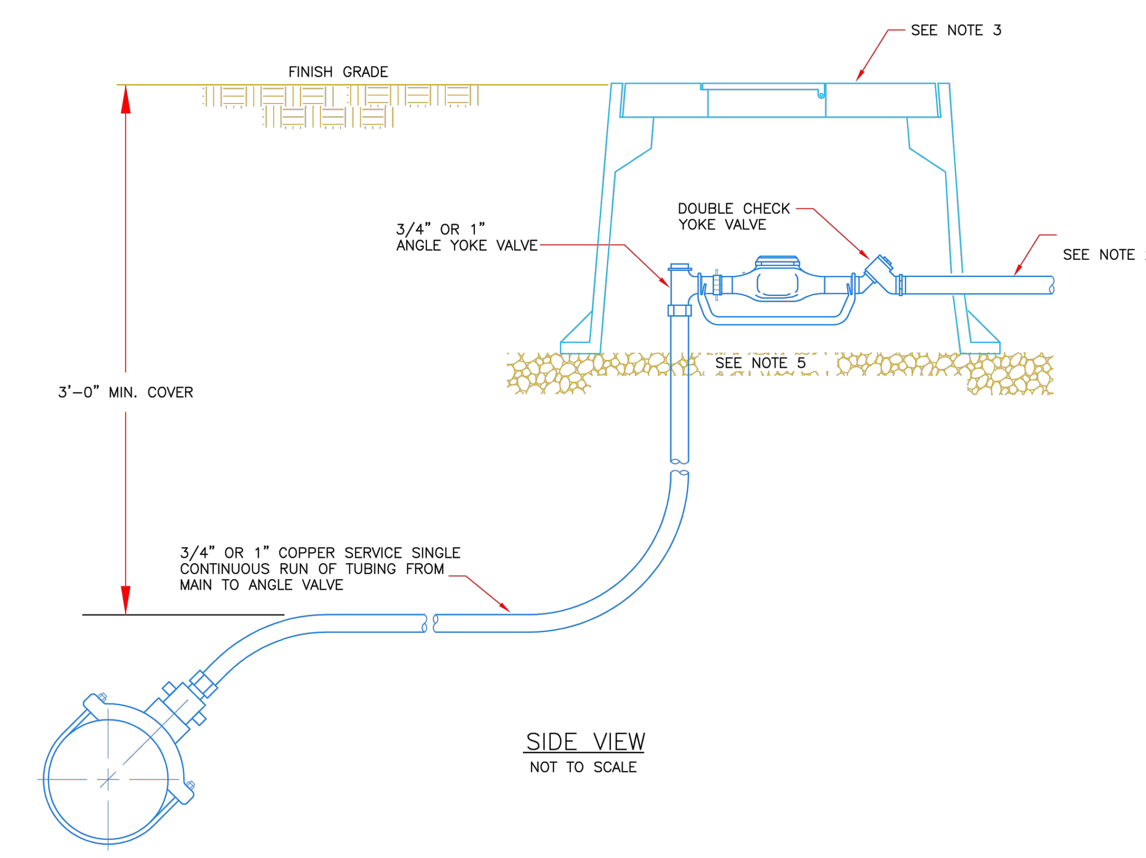

SIDE VIEW
NOT TO SCALE

GENERAL NOTES:
1. REFER TO THE CITY OF CONCORD SPECIFICATIONS FOR ACCEPTABLE MANUFACTURES OF MATERIALS.
2. PROVIDE 12" BRASS NIPPLE PAST BOX
3. THE METER HOUSING SHALL BE MID STATE PLASTICS OR EQUAL; 3/4–INCH BOX MSBCF – 1118–12XL AND LID MSCBC–1118– RTR; AND 1–INCH BOX MSBCF –1324–12XL AND LID MSCBC–1324– RTR. METER BOX RIM SHALL BE SET FLUSH WITH FINAL GRADE. THE WATER METER BOX ASSEMBLY SHALL NOT BE LOCATED WITHIN A ROAD, STREET, DRIVEWAY, SIDEWALK OR DRAINAGE FEATURE.
4. ALL APPURTENANCES FOR THE INSTALLATION OF THE WATER METER; THE METER, BRASS GROUND LOCKABLE METER CUTOFF, GASKETS, AND EXPANSION CONNECTION; SHALL BE INSTALLED BY THE CITY OF CONCORD, IF CONNECTION IS TO AN EXISTING MAIN.
5. THE BASE OF THE METER BOX MUST HAVE AT LEAST 6–INCHES TO 8–INCHES OF #57 WASHED STONE.

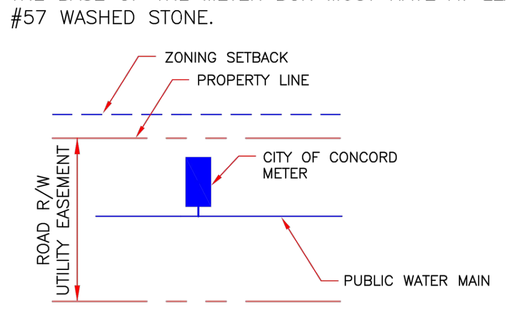

TYPICAL LOCATION REQUIREMENT
N.T.S.

CONCORD NORTH CAROLINA a city meeting the future... | WATER METER STANDARD DETAIL 3/4–INCH AND 1–INCH RESIDENTIAL WATER SERVICE METER

No.	Date	By	REVISION
1.	9/7/07	By	CONTINUOUS PIPE & CONNECTION, SVM

Drawn By:	Checked By:	Approved By:	Date	Sht	of
			02/05		

Know what's below. Call before you dig. 811

NO.	ISSUED FOR	DATE	BY

DESIGNED SRS
DRAWN AKL
CHECKED JNS
PROJ. ENGR. SRS
APPROVED

NORTH CAROLINA PROFESSIONAL SEAL 18179 ENGINEER JAMES N. STRUVE 10/8/15

NORTH CAROLINA PROFESSIONAL SEAL ENGINEER STEPHEN R. SANDS

Hazen
HAZEN AND SAWYER
4944 Parkway Plaza Blvd #375, Charlotte, NC 28217
(704) 357-3150

Concord NORTH CAROLINA High Performance Living

TREASURE DRIVE
STORM WATER IMPROVEMENTS

MISCELLANEOUS AND CITY OF CONCORD DETAILS

THE SCALE BAR SHOWN BELOW MEASURES ONE INCH LONG ON THE ORIGINAL DRAWING.

DATE OCTOBER 2015
H & S JOB NUMBER 32180-002
CONTRACT NUMBER
DRAWING NUMBER D2

ISSUED FOR BIDDING

20151009 10:46A O:\32180-CHA\32180-002\Drawings\SDETAILS\D2.dwg By: JGREENE Last Saved By: tbarnes XREFs= H:\30475\STD-DWG\ditch_xing,H:\30475\STD-DWG\RipRap_ckdam,H:\30475\STD-DWG\silt_fence,H:\30475\STD-DWG\straw_bale,H:\30475\STD-DWG\RESTRAINEDJOINTDETAIL,O:\32180-CHA\32180-002\Drawings\Tblock\31280-002-TB

STATE OF NORTH CAROLINA
DEPT. OF TRANSPORTATION
DIVISION OF HIGHWAYS
RALEIGH, N.C.

1-12

RIGID PIPE

ENGLISH STANDARD DRAWING FOR
METHOD OF PIPE INSTALLATION

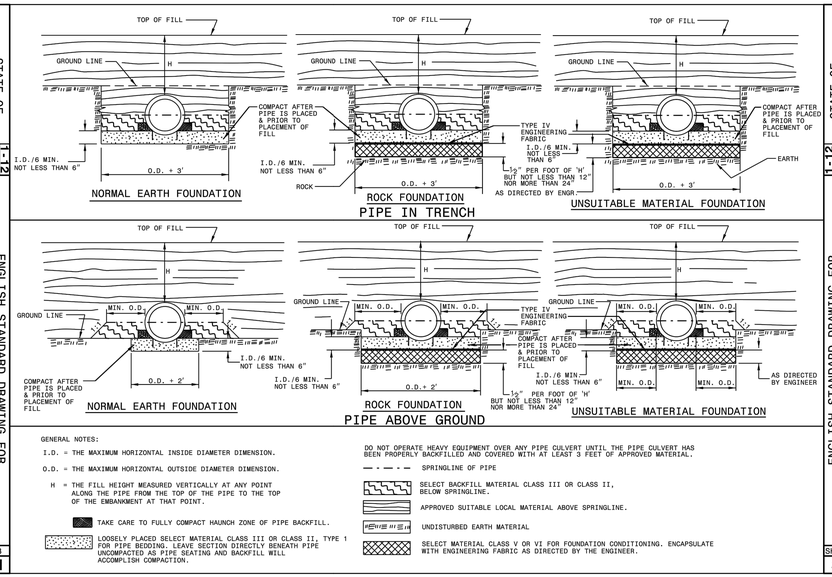

GENERAL NOTES:

I.D. = THE MAXIMUM HORIZONTAL INSIDE DIAMETER DIMENSION.

O.D. = THE MAXIMUM HORIZONTAL OUTSIDE DIAMETER DIMENSION.

H = THE FILL HEIGHT MEASURED VERTICALLY AT ANY POINT ALONG THE PIPE FROM THE TOP OF THE PIPE TO THE TOP OF THE EMBANKMENT AT THAT POINT.

TAKE CARE TO FULLY COMPACT HAUNCH ZONE OF PIPE BACKFILL.

LOOSELY PLACED SELECT MATERIAL CLASS III OR CLASS II, TYPE 1 FOR PIPE BEDDING. LEAVE SECTION DIRECTLY BENEATH PIPE UNCOMPACTED AS PIPE SEATING AND BACKFILL WILL ACCOMPLISH COMPACTION.

DO NOT OPERATE HEAVY EQUIPMENT OVER ANY PIPE CULVERT UNTIL THE PIPE CULVERT HAS BEEN PROPERLY BACKFILLED AND COVERED WITH AT LEAST 3 FEET OF APPROVED MATERIAL.

SPRINGLINE OF PIPE

SELECT BACKFILL MATERIAL CLASS III OR CLASS II, BELOW SPRINGLINE.

APPROVED SUITABLE LOCAL MATERIAL ABOVE SPRINGLINE.

UNDISTURBED EARTH MATERIAL

SELECT MATERIAL CLASS V OR VI FOR FOUNDATION CONDITIONING. ENCAPSULATE WITH ENGINEERING FABRIC AS DIRECTED BY THE ENGINEER.

SHEET 2 OF 3
300.01

STATE OF NORTH CAROLINA
DEPT. OF TRANSPORTATION
DIVISION OF HIGHWAYS
RALEIGH, N.C.

1-12

ENGLISH STANDARD DRAWING FOR
TRAFFIC BEARING GRATED DROP INLET
FOR CAST IRON DOUBLE FRAME AND GRATES

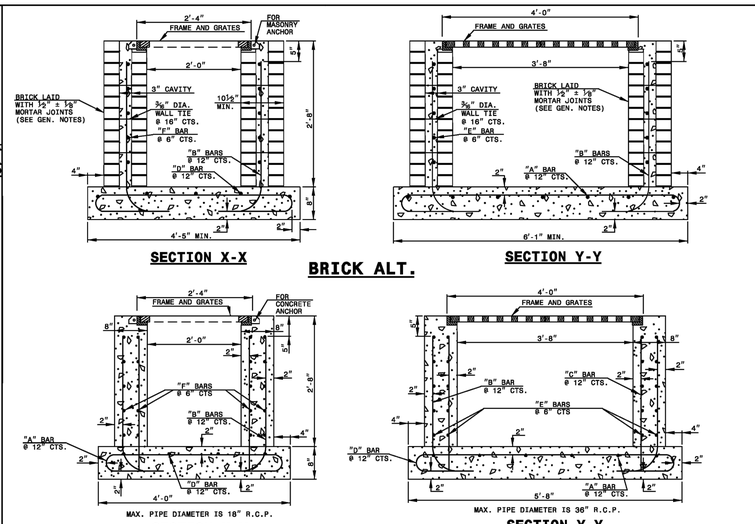

NOTES:
- HORIZONTAL AND VERTICAL DIMENSIONS MAY BE ADJUSTED AS THE FIELD CONDITIONS AND/OR ALTERNATE DESIGN REQUIRE.
- MAXIMUM HEIGHT FOR THIS STRUCTURE IS 14'-0".
- MAKE ALL ADJUSTMENTS AS DIRECTED BY THE ENGINEER.
- DEPTH OF STEEL GRATE WILL REQUIRE DEEPER SEAT ALONG SHORT WALLS.

SHEET 1 OF 2
840.35

STATE OF NORTH CAROLINA
DEPT. OF TRANSPORTATION
DIVISION OF HIGHWAYS
RALEIGH, N.C.

1-12

ENGLISH STANDARD DRAWING FOR
TRAFFIC BEARING GRATED DROP INLET
FOR CAST IRON DOUBLE FRAME AND GRATES

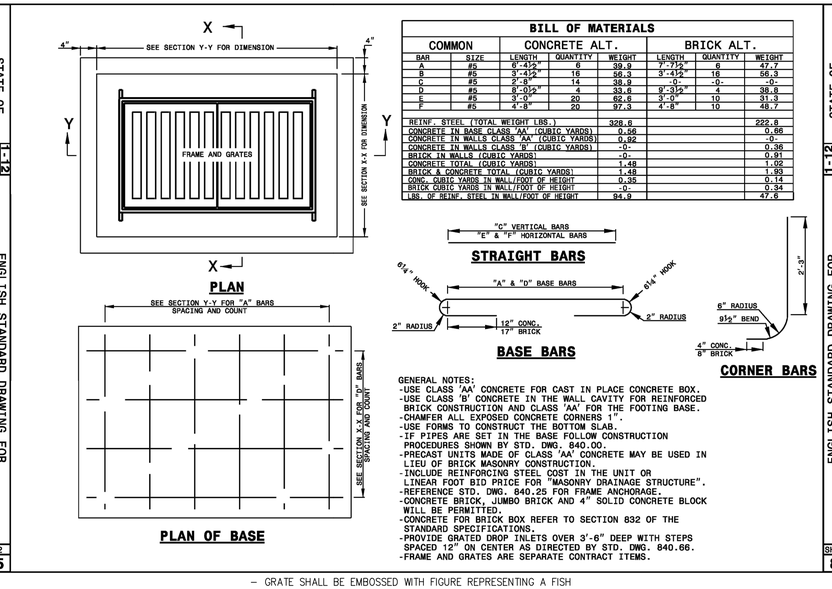

BILL OF MATERIALS

COMMON		CONCRETE ALT.			BRICK ALT.		
BAR	SIZE	LENGTH	QUANTITY	WEIGHT	LENGTH	QUANTITY	WEIGHT
A	#5	6'-4½"	6	39.9	7'-7½"	6	47.7
B	#5	3'-4½"	16	56.3	3'-4½"	16	56.3
C	#5	2'-8"	14	38.9	-0-	-0-	-0-
D	#5	8'-0½"	4	33.6	9'-3½"	4	38.8
E	#5	3'-0"	20	62.6	3'-0"	10	31.3
F	#5	4'-8"	20	97.3	4'-8"	10	48.7
REINF. STEEL (TOTAL WEIGHT LBS.)				328.6			222.8
CONCRETE IN BASE CLASS 'AA' (CUBIC YARDS)				0.56			0.66
CONCRETE IN WALLS CLASS 'AA' (CUBIC YARDS)				0.92			-0-
CONCRETE IN WALLS CLASS 'B' (CUBIC YARDS)				-0-			0.36
BRICK IN WALLS (CUBIC YARDS)				-0-			0.91
CONCRETE TOTAL (CUBIC YARDS)				1.48			1.02
BRICK & CONCRETE TOTAL (CUBIC YARDS)				1.48			1.93
CONC. CUBIC YARDS IN WALL/FOOT OF HEIGHT				0.35			0.14
BRICK CUBIC YARDS IN WALL/FOOT OF HEIGHT				-0-			0.34
LBS. OF REINF. STEEL IN WALL/FOOT OF HEIGHT				94.9			47.6

GENERAL NOTES:
- USE CLASS 'AA' CONCRETE FOR CAST IN PLACE CONCRETE BOX.
- USE CLASS 'B' CONCRETE IN THE WALL CAVITY FOR REINFORCED BRICK CONSTRUCTION AND CLASS 'AA' FOR THE FOOTING BASE.
- CHAMFER ALL EXPOSED CONCRETE CORNERS 1".
- USE FORMS TO CONSTRUCT THE BOTTOM SLAB.
- IF PIPES ARE SET IN THE BASE FOLLOW CONSTRUCTION PROCEDURES SHOWN BY STD. DWG. 840.00.
- PRECAST UNITS MADE OF CLASS 'AA' CONCRETE MAY BE USED IN LIEU OF BRICK MASONRY CONSTRUCTION.
- INCLUDE REINFORCING STEEL COST IN THE UNIT OR LINEAR FOOT BID PRICE FOR "MASONRY DRAINAGE STRUCTURE".
- REFERENCE STD. DWG. 840.25 FOR FRAME ANCHORAGE.
- CONCRETE BRICK, JUMBO BRICK AND 4" SOLID CONCRETE BLOCK WILL BE PERMITTED.
- CONCRETE FOR BRICK BOX REFER TO SECTION 832 OF THE STANDARD SPECIFICATIONS.
- PROVIDE GRATED DROP INLETS OVER 3'-6" DEEP WITH STEPS SPACED 12" ON CENTER AS DIRECTED BY STD. DWG. 840.66.
- FRAME AND GRATES ARE SEPARATE CONTRACT ITEMS.

SHEET 2 OF 2
840.35

– GRATE SHALL BE EMBOSSED WITH FIGURE REPRESENTING A FISH AND THE STATEMENT "DRAINS TO STREAM", OR SUITABLE ALTERNATIVE.

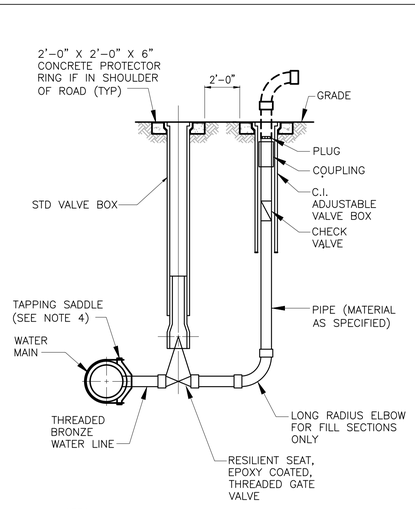

NOTES:
1. INSTALL 2" BLOW-OFF ON 6" THRU 20" MAINS
2. INSTALL 4" BLOW-OFF ON 24" OR LARGER MAINS.
3. VALVE BOX CONCRETE PAD SHALL BE 24" SQUARE 8" MINIMUM FROM EDGE OF VALVE BOX LID TO EDGE OF CONCRETE PAD.
4. ADD CORPORATION STOP IF MAKING WET TAP.

REVISION NO.	DATE	BY	CHKD

WSACC
WATER AND SEWER AUTHORITY OF CABARRUS COUNTY

BLOW-OFF DETAIL

FILE NAME: W9.0 DATE: 8/06

811. Know what's below. Call before you dig.

NO.	ISSUED FOR	DATE	BY

DESIGNED SRS
DRAWN AKL
CHECKED JNS
PROJ. ENGR. SRS
APPROVED

NORTH CAROLINA PROFESSIONAL SEAL 18179 ENGINEER JAMES N. STRUDE 8/15

NORTH CAROLINA PROFESSIONAL SEAL 19681 ENGINEER STEPHEN R. SANDS

Hazen
HAZEN AND SAWYER
4944 Parkway Plaza Blvd #375, Charlotte, NC 28217
(704) 357-3150

Concord NORTH CAROLINA High Performance Living

TREASURE DRIVE
STORM WATER IMPROVEMENTS

NCDOT AND WSACC STANDARD DETAILS

THE SCALE BAR SHOWN BELOW MEASURES ONE INCH LONG ON THE ORIGINAL DRAWING.

DATE OCTOBER 2015
H & S JOB NUMBER 32180-002
CONTRACT NUMBER
DRAWING NUMBER D3

ISSUED FOR BIDDING

20151009 10:46A O:\32180-CHA\32180-002\Drawings\SDETAILS\D3.dwg By:JGREENE Last Saved By: jgreene XREF's= O:\32180-CHA\32180-002\Drawings\?block\31280-002-TB

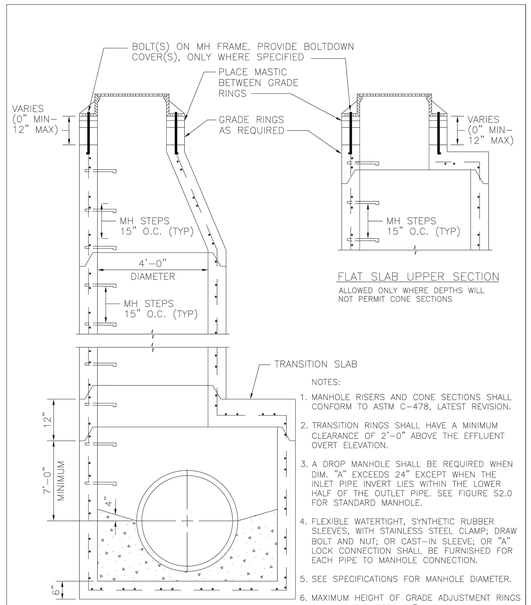

NOTES:

1. MANHOLE RISERS AND CONE SECTIONS SHALL CONFORM TO ASTM C–478, LATEST REVISION.
2. TRANSITION RINGS SHALL HAVE A MINIMUM CLEARANCE OF 2'–0" ABOVE THE EFFLUENT OVERT ELEVATION.
3. A DROP MANHOLE SHALL BE REQUIRED WHEN DIM. "A" EXCEEDS 24" EXCEPT WHEN THE INLET PIPE INVERT LIES WITHIN THE LOWER HALF OF THE OUTLET PIPE. SEE FIGURE S2.0 FOR STANDARD MANHOLE.
4. FLEXIBLE WATERTIGHT, SYNTHETIC RUBBER SLEEVES, WITH STAINLESS STEEL CLAMP; DRAW BOLT AND NUT; OR CAST–IN SLEEVE; OR "A" LOCK CONNECTION SHALL BE FURNISHED FOR EACH PIPE TO MANHOLE CONNECTION.
5. SEE SPECIFICATIONS FOR MANHOLE DIAMETER.
6. MAXIMUM HEIGHT OF GRADE ADJUSTMENT RINGS SHALL NOT EXCEED 12".

REVISION NO.	DATE	BY	CHKD	WSACC WATER AND SEWER AUTHORITY OF CABARRUS COUNTY	STANDARD PRECAST CONCRETE MANHOLE
					FILE NAME: S5.0 DATE: 8/06

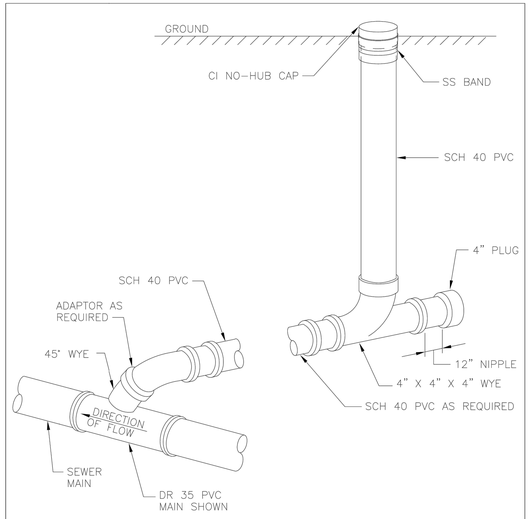

NOTES:

1. THE LATERAL SHALL BE A MINIMUM OF 5'–0" BELOW THE EDGE OF PAVEMENT, EXCEPT WHERE DEPTH OF SEWER MAIN WILL NOT PERMIT.
2. 4" SEWER LATERAL – MINIMUM GRADE 1.0%

REVISION NO.	DATE	BY	CHKD	WSACC WATER AND SEWER AUTHORITY OF CABARRUS COUNTY	TYPICAL SEWER LATERAL
					FILE NAME: S1.0 DATE: 8/06

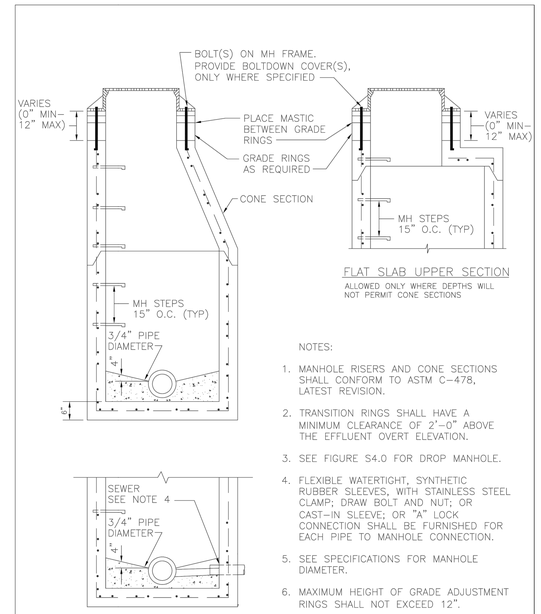

NOTES:

1. MANHOLE RISERS AND CONE SECTIONS SHALL CONFORM TO ASTM C–478, LATEST REVISION.
2. TRANSITION RINGS SHALL HAVE A MINIMUM CLEARANCE OF 2'–0" ABOVE THE EFFLUENT OVERT ELEVATION.
3. SEE FIGURE S4.0 FOR DROP MANHOLE.
4. FLEXIBLE WATERTIGHT, SYNTHETIC RUBBER SLEEVES, WITH STAINLESS STEEL CLAMP; DRAW BOLT AND NUT; OR CAST–IN SLEEVE; OR "A" LOCK CONNECTION SHALL BE FURNISHED FOR EACH PIPE TO MANHOLE CONNECTION.
5. SEE SPECIFICATIONS FOR MANHOLE DIAMETER.
6. MAXIMUM HEIGHT OF GRADE ADJUSTMENT RINGS SHALL NOT EXCEED 12".

REVISION NO.	DATE	BY	CHKD	WSACC WATER AND SEWER AUTHORITY OF CABARRUS COUNTY	STANDARD PRECAST CONCRETE MANHOLE
					FILE NAME: S2.0 DATE: 8/06

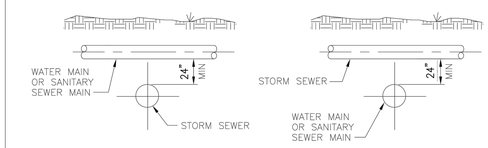

NOTE:

WHEN A WATER MAIN OR SANITARY SEWER MAIN CROSSES OVER OR UNDER A STORM SEWER AND CONDITIONS PREVENT THE REQUIRED **24"** MIN VERTICAL SEPARATION, THE WATER MAIN OR SANITARY SEWER MAIN SHALL BE CONSTRUCTED OF DUCTILE IRON PIPE WITH JOINTS EQUIVALENT TO WATER MAIN STANDARDS FOR A MINIMUM DISTANCE OF 10 FEET ON EACH SIDE OF THE POINT OF CROSSING.

REVISION NO.	DATE	BY	CHKD	WSACC WATER AND SEWER AUTHORITY OF CABARRUS COUNTY	RELATION OF WATER MAINS AND SANITARY SEWER MAINS TO STORM SEWERS
					FILE NAME: W4.0 DATE: 8/06

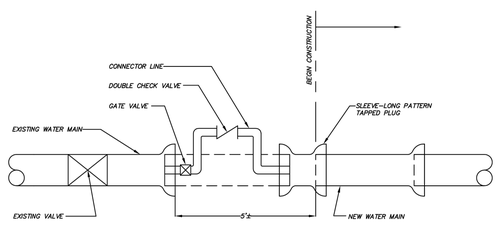

NOTES:

1. INSTALL CONNECTOR LINE FROM EXISTING BLOW OFF ASSEMBLY TO NEW MAIN FOR FILLING, TESTING AND STERILIZING NEW MAIN.
2. CONNECTOR LINE TO BE ASSEMBLED WITH CHECK VALVE AND TO BE OPERATED INDEPENDENT OF EXISTING MAIN.
3. BLOCKING ON EXISTING LINE NOT TO BE DISTURBED.
4. FINAL CONNECTION TO EXISTING MAIN TO BE MADE ONLY AFTER TOTAL PROJECT IS ACCEPTED BY THE OWNER.
5. VALVES ON EXISTING SYSTEM TO BE OPERATED BY OWNER FORCES ONLY.
6. ONLY ONE CONNECTION WILL BE ALLOWED BETWEEN THE EXISTING SYSTEM AND THE NEW CONSTRUCTION UNTIL TESTING AND DISINFECTION IS COMPLETE.

JUMPER CONNECTION

FIGURE 6

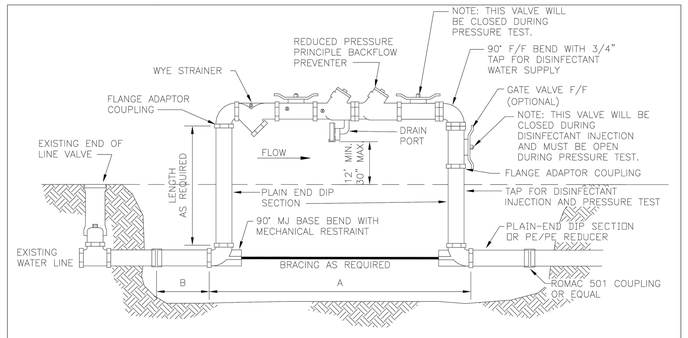

BACKFLOW DEVICE	A
4"	6'–3"
6"	9'
8"	11'–2"

WATER MAIN SIZE	B
6"	17"
8"	19"
12"	22"
16"	26"
24"	32"

WATER MAIN SIZE	MIN. BACKFLOW DEVICE SIZE	MIN. END OF LINE BLOWOFF
6" OR 8"	2"	2"
12"	4"	2.5
16"	6"	4"
24"	8"	6"

REVISION NO.	DATE	BY	CHKD	WSACC WATER AND SEWER AUTHORITY OF CABARRUS COUNTY	BACKFLOW PREVENTOR BY–PASS CONNECTION FOR FILLING NEW WATER MAINS
					FILE NAME: W2.0 DATE: 8/06

TABLE OF EMBEDMENT DEPTHS BELOW PIPE

D	a MIN SOIL	a MIN ROCK
27" & SMALLER	6"	6"
30" TO 60"	6"	9"
66" & LARGER	6"	12"

NOTES:

1. GRANULAR EMBEDMENT MATERIAL SHALL BE CRUSHED ROCK, PEA GRAVEL COARSE AGGREGATE SIZE NUMBER 57. EMBEDMENT MATERIAL SHALL BE PLACED IN LAYERS NOT MORE THAN 6" DEEP AND COMPACTED AS SPECIFIED.
2. HAND PLACED EMBEDMENT SHALL BE COMPACTED FINELY DIVIDED MATERIAL FREE FROM DEBRIS AND STONES.
3. EMBEDMENT ABOVE THE TOP OF THE PIPE SHALL BE AN UNCOMPACTED LAYER FOR ALL INSTALLATIONS.
4. REFER TO SPECIFICATIONS FOR GEOTECHNICAL FABRIC OR SPECIAL EMBEDMENT REQUIREMENTS FOR TRENCHES IN FINE SOILS EXTENDING BELOW GROUNDWATER LEVEL.
5. TRENCH OUTLINES DO NOT INDICATE ACTUAL TRENCH EXCAVATION SHAPE, SOIL CONDITIONS, OR PRESENCE OF SHEETING LEFT IN PLACE. EMBEDMENT MATERIAL SHALL EXTEND THE FULL WIDTH OF THE ACTUAL TRENCH EXCAVATION.

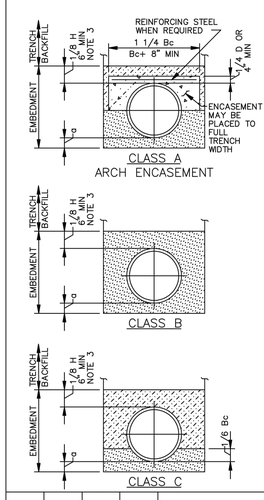

LEGEND

Bc	OUTSIDE DIAMETER OF PIPE
H	COVER ABOVE TOP OF PIPE
D	NOMINAL PIPE SIZE
a	EMBEDMENT BELOW PIPE (SEE TABLE)

HAND PLACED EMBEDMENT

GRANULAR EMBEDMENT

CONCRETE

REVISION NO.	DATE	BY	CHKD	WSACC WATER AND SEWER AUTHORITY OF CABARRUS COUNTY	EMBEDMENTS FOR MAINS
					FILE NAME: WS 1.0 DATE: 8/06

811. Know what's below. Call before you dig.

NO.	ISSUED FOR	DATE	BY

DESIGNED SRS
DRAWN AKL
CHECKED JNS
PROJ. ENGR. SRS
APPROVED

NORTH CAROLINA PROFESSIONAL SEAL 18179 ENGINEER JAMES N. STRUBE 8/15

NORTH CAROLINA PROFESSIONAL SEAL 19811 ENGINEER STEPHEN R. SANDS

Hazen

HAZEN AND SAWYER
4944 Parkway Plaza Blvd #375, Charlotte, NC 28217
(704) 357-3150

Concord NORTH CAROLINA High Performance Living

TREASURE DRIVE
STORM WATER IMPROVEMENTS

WSACC STANDARD DETAILS

THE SCALE BAR SHOWN BELOW MEASURES ONE INCH LONG ON THE ORIGINAL DRAWING.

DATE OCTOBER 2015
H & S JOB NUMBER 32180-002
CONTRACT NUMBER
DRAWING NUMBER D4

ISSUED FOR BIDDING

20151009 10:46A G:\32180-CHA\32180-002\Drawings\SDETAILS\D4.dwg By:JGREENE Last Saved By: tbarnes XREFs= H:\30475\STD-DWG\stch_xing,H:\30475\STD-DWG\RipRap_ckdam,H:\30475\STD-DWG\silt_fence,H:\30475\STD-DWG\strow_bale,H:\30475\STD-DWG\RESTRAINEDJOINTDETAIL,O:\32180-CHA\32180-002\Drawings\?block\31280-002-TB