HDR Engineering Inc
of the Carolinas

440 S. CHURCH STREET
SUITE 1000
CHARLOTTE, NC 28202
704-414-3700

N.C.B.E.L.S. License Number F-0116

Concord
NORTH CAROLINA
High Performance Living

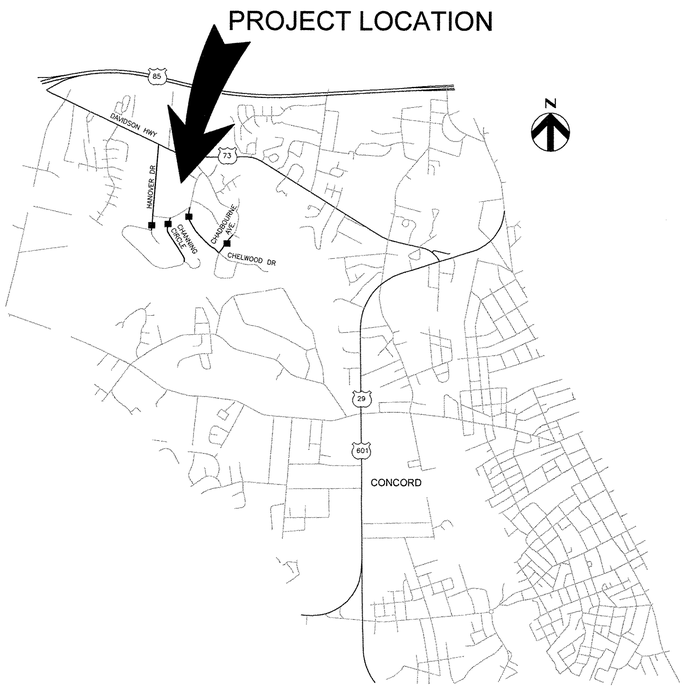

LOCATION MAP

Contract Drawings For

City of Concord Stormwater Services

ZEMOSA ACRES CULVERT REPLACEMENT

(Chadbourne Avenue, Chelwood Drive, Channing Circle, and Hanover Drive)

HDR Project No.
0000000000219915

Concord, North Carolina
September, 2016

NORTH CAROLINA PROFESSIONAL SEAL 30971 ENGINEER PATRICK BRANNIFORD 9/29/16

NORTH CAROLINA PROFESSIONAL SEAL 027761 ENGINEER MICHAEL TEPEDINO 9/29/16

INDEX OF DRAWINGS

GENERAL

00G-01	COVER SHEET
00G-02	SYMBOL LEGEND
00G-03	GENERAL NOTES
00G-04	TYPICAL SECTIONS

CIVIL

00C-01	PLAN AND PROFILE - CHADBOURNE AVENUE
00C-02	PLAN AND PROFILE - CHELWOOD DRIVE
00C-03	PLAN AND PROFILE - CHANNING CIRCLE
00C-04	PLAN AND PROFILE - HANOVER DRIVE
00C-05	EROSION AND SEDIMENT CONTROL
00C-06	EROSION AND SEDIMENT CONTROL
00C-07	TRAFFIC CONTROL OVERVIEW AND NOTES
00C-08	TRAFFIC CONTROL PLAN
00C-09	CIVIL DETAILS
00C-10	CIVIL DETAILS
00C-11	CIVIL DETAILS
00C-12	CIVIL DETAILS
00C-13	CIVIL DETAILS

STRUCTURAL

00S-01	HEADWALL DETAILS - CHADBOURNE AVENUE
00S-02	HEADWALL DETAILS - CHELWOOD DRIVE
00S-03	HEADWALL DETAILS - CHANNING CIRCLE
00S-04	HEADWALL DETAILS - HANOVER DRIVE
00S-05	STRUCTURAL NOTES & SECTIONS
00S-06	STRUCTURAL NOTES & SECTIONS

SITE PLAN SYMBOLOGY

- EMBANKMENT SLOPE
- 710 — CONTOUR
- VEGETATION (SIZE)
- TREE
- CO — CLEAN OUT
- MH — MANHOLE
- MW — MONITORING WELL
- PZ — PIEZOMETER
- CB — STORM DRAIN CATCH BASIN
- UV — UTILITY VAULT
- PP — POWER POLE
- TP — TELEPHONE POLE
- LIGHT POLE
- TELEPHONE POLE
- FH — FIRE HYDRANT
- WM — WATER METER
- VALVE
- YH–X — YARD HYDRANT
- ROAD SIGN
- MB — MAILBOX
- 75.5 — EXISTING SPOT ELEVATION
- 75.8 — FINISHED SPOT ELEVATION
- HORIZONTAL CP–X, CONTROL POINT
- BENCHMARK
- TH–"X" — IDENTIFICATION AND APPROXIMATE LOCATION OF SOIL TEST HOLE
- DOWNGUY
- EXTERIOR PADMOUNTED TRANSFORMER
- POLE MOUNTED TRANSFORMER
- Y — ELECTRICAL HANDHOLE OR MANHOLE Y – MHX OR HHX WHERE X INDICATES SEQUENCE NUMBER
- BLOCK & GRAVEL INLET PROTECTION
- TEMPORARY SEDIMENT TRAP
- TD — TEMPORARY DIVERSION (GRADE TO DRAIN)
- CHECK DAM
- ROCK PILE INLET PROTECTION

NOTES:

1. UTILITIES THAT ARE SUSPENDED ABOVE GRADE ARE DESIGNATED BY THE PREFIX "OH".

- T — TELEPHONE LINE
- E — ELECTRIC LINE
- FO — FIBER OPTIC
- G — GAS PIPELINE
- C — COMMUNICATION
- W — POTABLE WATER
- HANDRAIL AND GUARDRAIL
- PIPELINE
- LARGE PIPELINE
- UTILITY BENEATH STRUCTURE
- RAILROAD
- DRAINAGE FLOW
- NATURAL WATERWAY
- X — X — FENCELINE
- PROPERTY LINE
- CENTERLINE
- RB — ROCK BERM
- SF — SILT FENCE
- EASEMENT
- LIMITS OF CONSTRUCTION
- ROW
- WETLAND BOUNDARY
- TREE LINE
- GUARDRAIL
- IMPERVIOUS DIKE
- TREE PROTECTION
- ROCK OUTCROPPING

GENERAL NOTES:

1. THIS IS A STANDARD SHEET SHOWING COMMON SYMBOLOGY. ALL SYMBOLS ARE NOT NECESSARILY USED ON THIS PROJECT.
2. SCREENING OR SHADING OF WORK IS USED TO INDICATE EXISTING COMPONENTS OR TO DE–EMPHASIZE PROPOSED IMPROVEMENTS TO HIGHLIGHT SELECTED TRADE WORK. REFER TO CONTEXT OF EACH SHEET FOR USAGE.

MATERIALS IN PLAN/SECTION

- ACOUSTICAL CEILING TILE (SECTION)
- ASPHALT (PLAN OR SMALL SCALE SECTION)
- ASPHALT (LARGE SCALE SECTION)
- BATT INSULATION (SECTION)
- BRICK MASONRY (PLAN/SECTION)
- CHECKERED PLATE (PLAN)
- CONCRETE (PLAN/SECTION)
- CONCRETE MASONRY (PLAN/SECTION)
- DEMOLITION (PLAN/SECTION)
- EARTH (SECTION)
- FILTER POINT MAT (PLAN)
- FINISHED WOOD (SECTION)
- GLU–LAM LUMBER (SECTION)
- GRANULAR FILL (SECTION)
- GRATING (SECTION)
- GRATING (PLAN)
- GROUT (SECTION)
- GYPSUM BOARD (SECTION)
- METAL (SECTION)
- ORIENTED STRAND BOARD (SECTION)
- PARTICLE BOARD (SECTION)
- PLYWOOD (LARGE SCALE SECTION)
- PLYWOOD (SMALL SCALE SECTION)
- PRECAST CONCRETE (PLAN/SECTION)
- RIGID INSULATION (SECTION)
- RIPRAP (PLAN/SECTION)
- SAND (SECTION)
- SOD (SECTION)
- WEEP JOINT MORTAR PROTECTION SYSTEM (SECTION)
- WOOD – CONTINUOUS (SECTION)
- WOOD BLOCKING (SECTION)
- COIR MATTING

GENERAL SYMBOLOGY

N

ARROW INDICATES DIRECTION OF PLAN NORTH

PLAN
1/4" = 1'–0"

SECTION LETTER
FLAG INDICATES DIRECTION OF SECTION CUT
X / XXX
* SHEET WHERE SECTION VIEW IS LOCATED

SECTION CUT MARKER

SECTION LETTER

SECTION
3/8" = 1'–0"

X / XXX
* SHEET WHERE SECTION VIEW IS FIRST CUT

DETAIL NUMBER
/ XXX
* SHEET WHERE DETAIL IS LOCATED

DETAIL MARKER

DETAIL NUMBER

DETAIL
3" = 1'–0"

/ XXX
REPRESENTATIVE DRAWING WHERE DETAIL WAS CALLED OUT

ELEVATION IDENTIFICATION LETTER

ELEVATION
3" = 1'–0"

X / XXX
* SHEET WHERE POINT OF VIEW MARKER CAN BE FOUND

* IF PLAN AND SECTION, OR DETAIL CALL–OUT AND DETAIL ARE SHOWN ON SAME SHEET, SHEET NUMBER IS REPLACED BY A LINE (–).

SINGLE ELEVATION OR PHOTO MARKER

ELEVATION LETTER
X / XX
ARROW INDICATES POINT OF VIEW
* SHEET WHERE ELEVATION IS LOCATED

MULTIPLE ELEVATION OR PHOTO MARKER

ELEVATION LETTER
X X X X
ARROW INDICATES POINT OF VIEW ELEVATION
A–11
INDICATES SHEET WHERE ELEVATION IS LOCATED

KEY NOTE DESIGNATION

KEY NOTE NUMBER
#
TARGET ELEVATION

Concord NORTH CAROLINA High Performance Living

HDR

ISSUE	DATE	DESCRIPTION
1	9/6/16	ISSUED FOR CONSTRUCTION

PROJECT MANAGER	PB
CHECKED BY	RG
DRAWN BY	TM
PROJECT NUMBER	219915

NORTH CAROLINA PROFESSIONAL SEAL 30971 ENGINEER PATRICK BLANKENSHIP 9/09/16

CITY OF CONCORD STORMWATER SERVICES
ALFRED M. BROWN OPERATIONS CENTER
850 Warren C. Coleman Blvd.
Concord, North Carolina 28026-0308

ZEMOSA ACRES CULVERT REPLACEMENT
SYMBOL LEGEND

0 1" 2"

FILENAME 00G-02.dwg
SCALE NONE

SHEET 00G-02

GENERAL NOTES

UTILITIES:

UTILITIES ARE ILLUSTRATED FOR INFORMATION PURPOSES ONLY. THE CITY WILL NOT BE HELD RESPONSIBLE FOR THE ACCURACY OF UTILITY LOCATIONS, SIZES, DEPTHS, OR FOR COMPLETENESS OF UTILITY INFORMATION.

1. PRIOR TO CONSTRUCTION, THE CONTRACTOR SHALL NOTIFY AND MEET WITH ALL UTILITY OWNERS AND CITY INSPECTOR WHOSE FACILITIES WILL BE AFFECTED TO DETERMINE UTILITY LOCATIONS. THE CONTRACTOR SHALL PROTECT ALL UTILITIES FROM DAMAGE CAUSED BY HIS OPERATIONS OR THOSE OF HIS AGENTS. THE CONTRACTOR SHALL HOLD THE CITY HARMLESS FOR ANY THIRD-PARTY INCONVENIENCE CREATED BY WORK OF HIS OWN FORCES OR THAT OF HIS AGENTS. ANY DAMAGES INCURRED SHALL BE THE CONTRACTORS FINANCIAL RESPONSIBILITY.

2. PER CITY OF CONCORD CODE OF ORDINANCE CHAPTER 62, ARTICLE 3, SECTION 62-98 (2) ALL MATERIALS, EQUIPMENT, LABOR, AND WORKMANSHIP ASSOCIATED WITH PUBLIC WATER AND /OR SEWER EXTENSION AND/OR MODIFICATION SHALL BE IN ACCORDANCE WITH AND SUBJECT TO THE WATER AND SEWER AUTHORITY OF CABARRUS COUNTY'S STANDARD SPECIFICATIONS; THE CITY OF CONCORD'S ORDINANCES, POLICIES, AND STANDARD SPECIFICATIONS, AND THE NORTH CAROLINA ADMINISTRATIVE CODE FOR WASTEWATER COLLECTION AND WATER DISTRIBUTION SYSTEMS. IN THE EVENT OF CONFLICT BETWEEN THE WATER AND SEWER AUTHORITY OF CABARRUS COUNTY'S STANDARD SPECIFICATIONS; THE CITY OF CONCORD'S ORDINANCES, POLICIES, AND STANDARD SPECIFICATIONS, OR THE NORTH CAROLINA ADMINISTRATIVE CODE, THE MORE RESTRICTIVE REQUIREMENTS SHALL APPLY.

   REVIEW AND APPROVAL OF THE PLANS DOES NOT RELIEVE THE OWNER, CONTRACTOR, OR DEVELOPER FROM MEETING THE REQUIREMENTS OF THE CITY OF CONCORD'S OR CABARRUS COUNTY ORDINANCES, POLICIES, AND STANDARD SPECIFICATIONS, (AS APPLICABLE), CONCORD WATER & SEWER POLICIES AND TECHNICAL SPECIFICATIONS, THE "STANDARD SPECIFICATION FOR WASTEWATER COLLECTION & WASTE DISTRIBUTION FOR CABARRUS COUNTY" (WSACC MANUAL) AND ANY OTHER LOCAL, STATE, AND FEDERAL REGULATIONS & APPROVALS.

   THE CONTRACTOR MUST CONTACT THE CITY OF CONCORD ENGINEERING CONSTRUCTION MANAGER AT 704-920-5425 AT LEAST 24-HOURS PRIOR TO INITIATING ANY CONSTRUCTION ACTIVITY.

3. ALL OTHER ADJUSTMENTS/RELOCATIONS WILL BE PERFORMED BY THE VARIOUS UTILITY OWNERS. THE CONTRACTOR SHALL COORDINATE WORK WITH UTILITY OWNERS SO AS NOT TO ADVERSELY AFFECT THE PROJECT SCHEDULE. THE CITY WILL NOT BE HELD RESPONSIBLE FOR ANY DELAYS OR DISRUPTIONS TO THE WORK SCHEDULE OF OTHER UTILITY OWNERS.

4. FOR THE LOCATIONS OF EXISTING UTILITIES CONTACT NORTH CAROLINA ONE-CALL @ 1-800-632-4949.

5. FOR LOCATES OF UTILITIES NOT MEMBERS OF NORTH CAROLINA ONE-CALL CONTACT CITY INSPECTOR.

6. THE EXISTING WATER MAIN VALVE RIMS AND STEMS AND THE EXISTING SEWER MAIN MANHOLES RIMS ARE TO BE RAISED OR LOWERED TO FINAL GRADE, AS APPLICABLE AND AT LEAST 3-FT OF GROUND COVER IS TO BE MAINTAINED OVER THE EXISTING UTILITIES AT ALL TIMES PER THE CITY OF CONCORD CODE OF ORDINANCE CHAPTER 62, ARTICLE 3, SECTION 62-98.

PSNC GAS LINES

ALL LOCATIONS WILL BE TEMPORARILY DISCONNECTED AND RECONNECTED ONCE THE WORK IS COMPLETE AT EACH LOCATION. PLEASE CONTACT CHAD ROBINSON WITH PSNC ENERGY PRIOR TO START OF WORK FOR PLANNING AND ALLOW 4 DAYS FOR WORK TO BEGIN FOR LOCATE TICKETS TO BE WORKED. CONTACTS FOR JOB: CHAD ROBINSON – SUPERVISOR PSNC – 704-718-0220 AND JASON STOVER – LOCATOR PSNC – 704-718-0049.

EXISTING CITY SANITARY SEWER AND WATER LINES:

THE CONTRACTOR SHALL USE CARE WHEN WORKING AROUND SANITARY SEWERS AND WATER LINES. SHOULD THE CONTRACTOR DAMAGE EXISTING SEWER OR WATER LINES, HE SHALL IMMEDIATELY REPLACE THE LINE AT HIS EXPENSE WITH DUCTILE IRON PIPE.

PER THE CITY OF CONCORD CODE OF ORDINANCE CHAPTER 62, ARTICLE 3, SECTION 62-98 THE FOLLOWING MINIMUM SEPARATIONS MUST BE INDICATED, UNLESS OTHERWISE APPROVED BY THE CITY.

- A MINIMUM HORIZONTAL SEPARATION OF FIVE FEET SHALL BE MAINTAINED BETWEEN ANY TYPE OF MAINTENANCE OBSTRUCTION AND THE CITY'S WATER DISTRIBUTION LINES, WASTEWATER COLLECTION LINES, AND ASSOCIATED APPURTENANCES, UNLESS AN EXCEPTION IS GRANTED. GREATER SEPARATION DISTANCES MAY BE REQUIRED AS SPECIFIED BY FEDERAL, STATE, OR LOCAL REGULATIONS.
- A MINIMUM VERTICAL SEPARATION OF TWO FEET SHALL BE MAINTAINED BETWEEN ANY TYPE OF MAINTENANCE OBSTRUCTION, INCLUDING BUT NOT LIMITED TO ANY OTHER UTILITY PROVIDER'S LINES OR EQUIPMENT, AND THE CITY WATER DISTRIBUTION LINES, WASTEWATER COLLECTION LINES, AND ASSOCIATED APPURTENANCES, UNLESS AN EXCEPTION IS GRANTED. IF AN EXCEPTION IS GRANTED, A MINIMUM VERTICAL SEPARATION OF ONE FOOT MUST BE MAINTAINED AND THE CITY WATER DISTRIBUTION LINES, WASTEWATER COLLECTION LINES, AND ASSOCIATED APPURTENANCES SHALL BE CONSTRUCTED OF DUCTILE IRON PIPE OR AN APPROVED FERROUS MATERIAL WITH JOINTS THAT ARE EQUIVALENT TO POTABLE WATER MAIN STANDARDS FOR A DISTANCE OF TEN FEET ON EITHER SIDE OF THE POINT OF CROSSING. GREATER SEPARATION DISTANCES MAY BE REQUIRED AS SPECIFIED BY FEDERAL, STATE, OR LOCAL REGULATIONS.
- A MINIMUM HORIZONTAL SEPARATION OF TEN FEET SHALL BE MAINTAINED BETWEEN THE CITY WATER DISTRIBUTION SYSTEM AND WASTEWATER COLLECTION LINES, AND ASSOCIATED APPURTENANCES, UNLESS AN EXCEPTION IS GRANTED.

PRIVATE WATER LINES

THE PROJECT AREA IS SERVED BY PRIVATE WATER LINES THAT HAVE NOT BEEN MARKED ON THE PLANS. THE CONTRACTOR IS RESPONSIBLE FOR COORDINATING WITH UTILITIES, INC. ON THE RELOCATION OF THESE LINES. UTILITIES, INC. WILL PERFORM DISCONNECTION AND RELOCATION OF THEIR OWN LINES. CONTACT FOR UTILITIES, INC IS MARK HAVER (704) 319-0516.

1. THE CONTRACTOR IS SOLELY RESPONSIBLE FOR SITE SAFETY ASSOCIATED WITH THE WORK UNDER THIS PROJECT AND FOR COMPLIANCE WITH ALL FEDERAL, STATE, AND LOCAL HEALTH AND SAFETY LAWS, CODES, REGULATIONS, AND ORDINANCES INCLUDING BUT NOT LIMITED TO THOSE CURRENTLY MANDATED BY THE OCCUPATIONAL SAFETY AND HEALTH ADMINISTRATION (OSHA).

2. CONTRACTOR SHALL USE ADEQUATE SHORING METHODS TO ENSURE:
   A. COMPLIANCE WITH OSHA REGULATIONS.
   B. PROTECTION OF EXISTING PAVEMENT AND ROAD SHOULDERS.
   C. CONSTRUCTION ACTIVITIES ARE CONFINED TO RIGHTS-OF-WAY OR EASEMENTS AS INDICATED.

3. CONTRACTOR SHALL INSTALL PROJECT IMPROVEMENTS AS INDICATED ON PLANS AND SHALL NOT DISTURB ANY AREA OUTSIDE THE LIMITS OF DISTURBANCE SHOWN ON THE PLANS, UNLESS OTHERWISE DIRECTED.

4. CONTRACTOR TO REPAIR/REPLACE ALL PAVEMENT DAMAGED BY CONSTRUCTION ACTIVITIES TO SATISFACTION OF THE CITY OF CONCORD, PAVEMENT REPAIR TO MATCH EXISTING. NO SEPARATE PAYMENT SHALL BE MADE FOR PAVEMENT REPAIR EXCEPT AS NOTED ON PLANS.

5. LOCATION OF EXISTING UTILITIES SHOWN ON THESE PLANS ARE NOT INTENDED TO BE EXACT OR COMPLETE. THE CONTRACTOR SHALL COORDINATE WITH ALL UTILITY COMPANIES AND FIELD VERIFY THE LOCATION AND DEPTH OF ALL UTILITIES PRIOR TO CONSTRUCTION. LOCATE WELL AHEAD OF EXCAVATION ACTIVITY TO ALLOW FOR ADJUSTMENT. NO SEPARATE PAYMENT WILL BE MADE FOR FIELD VERIFICATION OR ADJUSTMENT AS REQUIRED. ADJUSTMENTS TO LAYOUT SHOWN SHALL BE SUBJECT TO ENGINEER APPROVAL. CONTRACTOR SHALL REPAIR, AT HIS OWN EXPENSE, ANY DAMAGE CAUSED BY CONSTRUCTION-RELATED ACTIVITIES TO EXISTING UTILITY LINES.

GENERAL NOTES

PRIVATE WATER LINES

6. IN THE EVENT OF DAMAGE TO EXISTING UTILITIES, CONTRACTOR SHALL STOP WORK IMMEDIATELY, TAKE NECESSARY PRECAUTIONS TO PREVENT INJURY OR FURTHER DAMAGE, AND NOTIFY PROPER AUTHORITIES. CONTRACTOR SHALL BE RESPONSIBLE FOR RESTORING/REPAIRING ALL EXISTING STRUCTURES, CONDUITS, OR OTHER UTILITIES DAMAGED BY CONTRACTOR'S OPERATIONS AT NO COST TO CITY.

7. THE CONTRACTOR SHALL RECONSTRUCT ALL ROAD SHOULDERS, DRAINAGE DITCHES AND SWALES DISTURBED BY CONSTRUCTION ACTIVITIES TO THEIR ORIGINAL GRADE AND LOCATION.

8. IT WILL BE THE SOLE RESPONSIBILITY OF THE CONTRACTOR TO COORDINATE WITH POWER AND TELEPHONE COMPANIES FOR RELOCATING OR STABILIZING ANY EXISTING POLES WHICH WILL BE DISTURBED BY CONSTRUCTION. THIS WORK SHALL BE DONE AT NO COST TO THE CITY.

9. TRAFFIC CONTROL SHALL BE MAINTAINED IN ACCORDANCE WITH NCDOT SPECIFICATIONS AND REQUIREMENTS OF THESE PLANS.

10. ALL HOLES, TRENCHES, AND OTHER HAZARDOUS AREAS SHALL BE ADEQUATELY PROTECTED BY BARRICADES, LIGHTS OR OTHER PROTECTIVE DEVICES.

11. REMOVAL OF EXCAVATED MATERIALS AND DAILY CLEANUP OPERATIONS SHALL BE PERFORMED IN COMPLIANCE WITH THE SPECIFICATIONS AND TO THE SATISFACTION OF THE OWNER/ENGINEER.

12. ALL ROCKS, BRUSH, TIMBER, AND OTHER DEBRIS THAT IS CLEARED FROM THE PROJECT AREA SHALL BE REMOVED FROM THE PREMISES AND SHALL NOT BE PLACED ON ADJOINING LANDS, EXCEPT WHERE ARRANGEMENTS FOR SUCH PLACEMENT OR DISPOSAL ARE MADE WITH THE APPROPRIATE PROPERTY OWNERS.

13. ALL TREE PROTECTION AND EROSION AND SEDIMENTATION CONTROLS SHALL BE IMPLEMENTED BEFORE CONSTRUCTION COMMENCES AND SHALL NOT BE REMOVED UNTIL RE-VEGETATION HAS BEEN ESTABLISHED.

14. THERE IS NO PAY ITEM FOR DEWATERING AND NO SEPARATE PAYMENT WILL BE MADE FOR DEWATERING. ANY DEWATERING OF THE SITE REQUIRED IS THE RESPONSIBILITY OF THE CONTRACTOR AND SHALL BE INCIDENTAL TO THE EXCAVATION UNIT PRICE BID. THE DISCHARGE OF WATER SHALL MEET ALL DEQ REQUIREMENTS INCLUDING THE MAXIMUM TURBIDITY LEVEL OF 50 NTU.

15. THE CONTRACTOR SHALL BE RESPONSIBLE FOR PROVIDING THE ENGINEER WITH A SET OF SURVEY RECORD (AS-BUILT) DRAWINGS PREPARED BY A NORTH CAROLINA REGISTERED LAND SURVEYOR CERTIFYING TO THE COMPLIANCE WITH THE CONTRACT DRAWINGS. THESE DRAWINGS SHALL AT MINIMUM SHOW THE FINAL INVERT, RIM ELEVATIONS AND HORIZONTAL LOCATIONS (NC STATE PLANE COORDINATES) OF ALL BUILT STRUCTURES, MANHOLES, AND APPURTENANCES ASSOCIATED WITH THE PROPOSED CONSTRUCTION SHOWN ON THE CONTRACT DRAWINGS. THE CONTRACTOR SHALL REFER TO CHAPTER 62-88 OF THE CITY'S CODE OF ORDINANCES FOR SPECIFIC INFORMATION RELATED TO THE COLLECTION OF WATER AND SEWER FACILITIES.

16. ALL PIPE LENGTHS SHOWN ARE PLAN LENGTH MEASURED FROM CENTER TO CENTER OF MANHOLES AND ROUNDED TO THE NEAREST FOOT. SLOPES ARE CALCULATED USING THE LENGTHS DESCRIBED AND USING THE INVERT AND RIM ELEVATIONS SHOWN.

17. THE CONTRACTOR IS RESPONSIBLE FOR ESTABLISHING AND MAINTAINING ALL PROPOSED VEGETATION FOR A PERIOD OF UP TO A MINIMUM OF 12 MONTHS OR WITHIN THEIR WARRANTY PERIOD OF THE CONTRACT, WHICHEVER IS LONGER. THIS INCLUDES WATERING, FERTILIZATION AND HARVESTING AND REPLACING DEAD VEGETATION TO MAINTAIN PROPOSED PLANT DENSITIES. THE COSTS FOR PERFORMING THESE ACTIVITIES IS INCIDENTAL TO THE BID PRICE FOR PLANTING.

18. ALL CONSTRUCTION ACTIVITIES, SUCH AS EXCAVATION, PAVEMENT REPAIR, REMOVAL/INSTALLATION OF PIPES AND DRAINAGE STRUCTURES, RIPRAP PLACEMENT SHALL BE PERFORMED IN ACCORDANCE WITH CITY OF CONCORD STANDARDS AND NCDOT STANDARDS AND SPECIFICATIONS.

DRAINAGE STRUCTURES:

1. GRADES, ELEVATIONS AND LOCATIONS SHOWN ARE APPROXIMATE. AS DIRECTED BY THE ENGINEER, THEY MAY BE ADJUSTED TO ACCOMMODATE UNFORESEEN CONDITIONS. STATIONS, OFFSETS AND ELEVATIONS REFER TO THE CENTER OF DROP INLETS, MANHOLES AND JUNCTION BOXES, AND THE MIDPOINT OF THE LIP FOR CATCH BASINS. ALL PIPES SHALL BE RCP CLASS III, UNLESS OTHERWISE NOTED.

2. WEEPHOLES ARE TO BE CONSTRUCTED IN ALL DRAINAGE STRUCTURES, A MINIMUM OF 1 WEEPHOLE PER STRUCTURE. WEEPHOLES ARE TO BE CONSTRUCTED IN THE BOTTOM 1/3 OF STRUCTURE AND COVERED ON THE OUTSIDE OF THE STRUCTURE BY A BAG MADE OF FILTER FABRIC AND FILLED W/#78 STONE. THERE WILL BE NO SEPARATE PAYMENT FOR THIS WORK.

SUBSURFACE PLANS:

A GEOTECHNICAL REPORT HAS BEEN PROVIDED HOWEVER, SUBSURFACE INVESTIGATIONS AND SOIL TEST BORING INFORMATION DOES NOT GUARANTEE THE PRESENCE OR ABSENCE OF ROCK OR ANY OTHER UNFORESEEN CONDITIONS THAT MAY BE ENCOUNTERED DURING CONSTRUCTION. THIS GEOTECHNICAL INFORMATION SHOULD NOT BE CONSIDERED EXHAUSTIVE.

FENCES:

THE CONTRACTOR SHALL REMOVE AND RESET FENCES AS NOTED ON THE PLANS AND/OR AS DIRECTED BY THE ENGINEER.

SIDE SLOPES:

LIMITS OF PROPOSED SLOPES ARE INDICATED IN THE PLANS, DETAILS AND STANDARD DRAWINGS. THE MAXIMUM SLOPE SHALL NOT EXCEED A 3:1 (HORIZONTAL TO VERTICAL) UNLESS DESIGNATED BY THE ENGINEER. A CUT SLOPE OF 2:1 MAXIMUM WILL BE USED ONLY AS DIRECTED BY THE ENGINEER.

TOLERANCE:

1. STRUCTURES INCLUDING STORM DRAIN PIPE, STORM STRUCTURES, SEWER PIPE, AND RETAINING WALLS SHALL HAVE A TOLERANCE OF ±0.10 FEET. STRUCTURES INCLUDING RISERS, WEIRS, AND ORIFICES, SHALL HAVE A TOLERANCE OF ±0.05 FEET.

2. STREAM IMPROVEMENT STRUCTURES SHALL HAVE A VERTICAL TOLERANCE OF ±0.10 FEET, AND A PLANIMETRIC TOLERANCE OF ±0.50 FEET.

SAWCUTS:

THE CONTRACTOR SHALL SAWCUT EXISTING ASPHALT AND/OR CONCRETE SURFACES PRIOR TO REMOVAL UNLESS OTHERWISE DIRECTED BY THE ENGINEER. SAW CUT WIDTH SHALL BE 1 FOOT MINIMUM FROM THE EXISTING EDGE OF PAVEMENT. SAW CUT PAVEMENT SHALL BE REPLACED AS WELL AS ADDITIONAL PAVEMENT REQUIRED TO TIE-IN TO FACE OF EXISTING PAVEMENT.

GENERAL NOTES

STREAM CHANNEL WORK:

1. THE CONTRACTOR IS TO PUMP ALL STREAM FLOW AROUND THE PROPOSED WORK AS SHOWN IN THE DETAILS. USE ONE OR MORE PUMPS, SIZED TO PUMP THE VOLUME OF WATER DICTATED BY STREAM CONDITIONS AND REFERENCED IN DETAIL 2/C10. THE PUMP(S) ARE TO BE PLACED IN A POOL UPSTREAM OF THE WORK. THE STREAM FLOW SHALL BE PUMPED AROUND THE WORK AND DOWNSTREAM A DISTANCE TO BE WELL OUTSIDE OF ALL CHANNEL WORK. THE PUMPS AND BYPASS PIPING SHALL BE MOVED AS THE WORK PROGRESSES. MAINTAIN A MINIMUM OF 30' CLEAR UNDISTURBED AREA FROM THE DOWNSTREAM-MOST POINT OF CHANNEL DISTURBANCE TO THE POINT AT WHICH THE STREAM FLOW RETURNS TO THE STREAM CHANNEL. PLACE THE BYPASS PIPING DISCHARGE POINT IN THE STREAM CHANNEL BED, IN AN AREA OF COARSE MATERIAL TO MINIMIZE EROSION. DO NOT PLACE THE DISCHARGE POINT ON THE CHANNEL BANK.

2. CONTRACTOR SHALL HAVE AT LEAST ONE TRACKHOE WITH A HYDRAULIC "THUMB" ATTACHMENT FOR INSTALLATION OF STREAM STRUCTURES. SIZE OF EQUIPMENT SHALL BE SUITABLE TO HANDLE ROCK AND TIMBER STRUCTURES WITHOUT DAMAGING PROJECT AREA.

3. GRADE SPECIFICATIONS FOR EACH IN-STREAM STRUCTURE SHALL BE CHECKED DURING STRUCTURE PLACEMENT. THE MAXIMUM DEVIATION FROM SPECIFIED GRADE SHALL BE +/- 0.10 FEET. CONTRACTOR SHALL BE RESPONSIBLE FOR PROVIDING SURVEY EQUIPMENT/CREW TO DOCUMENT REQUIRED ELEVATIONS.

4. IF ROCK IS ENCOUNTERED DURING EXCAVATION, THE CITY INSPECTOR OR ENGINEER SHALL BE NOTIFIED IMMEDIATELY. THE ELEVATION OF THE ROCK SHALL BE DETERMINED BY THE CONTRACTOR AND REPORTED TO THE CITY INSPECTOR OR ENGINEER. GRADING IN THIS AREA SHALL CEASE UNTIL THE SITUATION IS ASSESSED AND CHANGES, IF ANY, ARE DETERMINED.

5. ROCK VANES, ROCK CROSS VANES, STEP POOLS, AND OTHER ROCK STRUCTURES SHALL BE CONSTRUCTED OF FLAT-SIDED, DURABLE FIELD OR QUARRY STONE OBTAINED FROM A SOURCE IDENTIFIED BY THE CONTRACTOR THAT IS SOUND, HARD, DENSE, ANGULAR, RESISTANT TO WEATHERING AND NATURAL IN APPEARANCE. DETAILS FOR THE CONSTRUCTION OF THESE STRUCTURES ARE SHOWN ON DETAIL SHEETS. ADDITIONAL INFORMATION FOR STRUCTURE INSTALLATION IS PROVIDED IN THE SPECIAL PROVISIONS. ROCK SHALL BE IGNEOUS TO RESIST WEATHERING AND SHALL BE FREE OF CRACKS. POROUS ROCK SUCH AS SOME LIMESTONES AND SOFT ROCK SUCH AS SHALES ARE NOT ALLOWED. CUT ROCK, CONCRETE, OR OTHER DEBRIS SHALL NOT BE ALLOWED UNLESS WHERE SPECIFIED. SUITABLE ROCK EXCAVATED FROM THE BYPASS CHANNEL CAN BE USED. HOWEVER, PRIOR TO ATTEMPTING TO REMOVE THE ROCK, THE CONTRACTOR MUST CONFIRM THAT THE ROCK ENCOUNTERED IS NOT BEDROCK. ROCK CANNOT BE EXCAVATED FROM OTHER ON-SITE AREAS.

CHANNEL RESTORATION:

DUE TO THE NATURE OF THE WORK INVOLVED WITHIN THE EXISTING CHANNEL, THE CONTRACTOR SHALL BE REQUIRED TO COORDINATE CLOSELY WITH THE CITY INSPECTOR OR ENGINEER, SPECIFICALLY IN THE FOLLOWING AREAS:

- PRIOR TO CLEARING AND GRUBBING – OBTAIN THE WRITTEN APPROVAL BY CITY.
- UPON LAYOUT OF NEW STREAM BANKS – OBTAIN APPROVAL BY ENGINEER PRIOR TO EXCAVATION.
- PRIOR TO/DURING PLACEMENT OF IN-STREAM STRUCTURES – OBTAIN DIRECTION/APPROVAL BY ENGINEER ON FINAL LAYOUT AND ELEVATION.
- PRIOR TO OVERBANK GRADING – IDENTIFY TREE PROTECTION ZONES AND APPROVAL BY CITY.
- FILLING OF EXISTING CHANNEL – USE OF ONSITE EXCAVATED SOIL IS PERMITTED, AS APPROVED BY CITY INSPECTOR. THE COMPACTION OF THE FILL SHALL BE ACCORDING TO PLANS, OR AS DIRECTED BY CITY INSPECTOR DEPENDING ON SITE CONDITIONS.

EROSION CONTROL NOTES

1. THE CONTRACTOR SHALL INSTALL ALL EROSION AND SEDIMENTATION CONTROL MEASURES AND DEVICES NECESSARY TO COMPLY WITH THE STANDARDS AND SPECIFICATIONS OF THE NORTH CAROLINA DEPARTMENT OF ENVIRONMENTAL QUALITY AND APPLICABLE STATE AND LOCAL LAWS AND ORDINANCES.

2. ADDITIONAL MEASURES TO CONTROL EROSION AND SEDIMENT MAY BE REQUIRED BASED ON FIELD CONDITIONS OR AT THE DIRECTION OF THE CITY INSPECTOR OR ENGINEER.

3. PRIOR TO COMMENCING LAND DISTURBANCE ACTIVITY, THE LIMITS OF LAND DISTURBANCE SHALL BE CLEARLY AND ACCURATELY DEMARCATED WITH STAKES, FENCING, OR OTHER APPROPRIATE MEANS. THE LOCATION AND EXTENT OF ALL AUTHORIZED LAND DISTURBANCE ACTIVITY SHALL BE DEMARCATED FOR THE DURATION OF THE CONSTRUCTION ACTIVITY. NO LAND DISTURBANCE SHALL OCCUR OUTSIDE THE APPROVED LIMITS INDICATED ON THE APPROVED PLANS.

4. PRIOR TO GRUBBING, ALL TREE PROTECTION FENCING SHALL BE INSTALLED, INSPECTED AND APPROVED BY THE CITY INSPECTOR OR ENGINEER. TREES WITHIN THE PROTECTION AREAS MAY ONLY BE REMOVED WITH APPROVAL BY THE CITY INSPECTOR OR ENGINEER.

5. ALL PERIMETER EROSION CONTROL DEVICES AND STORMWATER MANAGEMENT DEVICES SHALL BE INSTALLED PRIOR TO ANY OTHER CONSTRUCTION AND WITHIN 24 HOURS OF GRUBBING. THIS MAY REQUIRE GRUBBING IN STAGES TO ENSURE EROSION CONTROL MEASURES ARE PUT IN PLACE PRIOR TO RAIN EVENT. THE LOCATION OF SOME OF THE EROSION CONTROL DEVICES MAY HAVE TO BE ALTERED FROM THAT SHOWN ON THE APPROVED PLANS IF DRAINAGE PATTERNS DURING CONSTRUCTION ARE DIFFERENT FROM THE FINAL PROPOSED DRAINAGE PATTERNS. IT IS THE CONTRACTOR'S RESPONSIBILITY TO ACCOMPLISH EROSION CONTROL FOR ALL DRAINAGE PATTERNS CREATED AT VARIOUS STAGES DURING CONSTRUCTION. ANY DIFFICULTY IN CONTROLLING EROSION DURING ANY PHASE OF CONSTRUCTION SHALL IMMEDIATELY BE REPORTED TO THE CITY INSPECTOR OR ENGINEER.

6. THE CONSTRUCTION OF THE SITE WILL COMMENCE WITH INSTALLATION OF EROSION CONTROL MEASURES SUFFICIENT TO CONTROL SEDIMENT DEPOSITS AND EROSION. ALL SEDIMENT CONTROL WILL BE MAINTAINED UNTIL ALL UPSTREAM GROUND WITHIN THE CONSTRUCTION AREA HAS BEEN COMPLETELY STABILIZED WITH PERMANENT VEGETATION.

7. FAILURE TO INSTALL, OPERATE OR MAINTAIN ALL EROSION CONTROL MEASURES WILL RESULT IN ALL CONSTRUCTION BEING STOPPED ON THE JOB SITE UNTIL SUCH MEASURES ARE CORRECTED ADHERENT TO THE PLANS, DETAILS, AND SPECIFICATIONS SHOWN ON THE PLANS, NORTH CAROLINA EROSION AND SEDIMENT CONTROL DESIGN MANUAL, OR THE MORE PROTECTIVE OF THE TWO.

8. ON-SITE STOCKPILING OF SOIL IS ALLOWED WITHIN THE LIMITS OF DISTURBANCE SUBJECT TO PLACING APPROPRIATE EROSION CONTROL DEVICES TO PREVENT SOIL LOSS DURING RAIN EVENTS. LOCATIONS SHALL BE PRE-APPROVED BY THE CITY INSPECTOR OR ENGINEER.

9. ANY OFF-SITE AREAS TO BE USED FOR STORAGE OR STOCKPILING SHALL BE THE RESPONSIBILITY OF THE CONTRACTOR TO COMPLY WITH NORTH CAROLINA SEDIMENTATION AND POLLUTION CONTROL ACT.

EROSION CONTROL NOTES

10. INSTALL CONSTRUCTION ENTRANCES AND ACCESS ROADS IN LOCATIONS SHOWN, IN ACCORDANCE WITH STATE STANDARDS AND WITH MINIMAL DISTURBANCE TO SURROUNDING VEGETATION AND TREES. CONTRACTOR SHALL RECEIVE PRIOR APPROVAL FROM CITY BEFORE TREE REMOVAL FOR ACCESS ROAD CONSTRUCTION. WITHIN 30 DAYS AFTER CONSTRUCTION IS COMPLETED FOR WHICH ACCESS ROAD IS USED, AND UNLESS OTHERWISE APPROVED, CONTRACTOR SHALL REMOVE ALL REMNANTS OF THE ACCESS ROADS AND RETURN AREA TO AS GOOD AS OR BETTER CONDITION. ADDITIONAL EROSION CONTROL MEASURES MAY BE NECESSARY BASED ON SITE CONDITIONS AND CONTRACTOR'S PRACTICES, AS DIRECTED BY THE ENGINEER.

11. ALL MATERIALS SPILLED, DROPPED, WASHED, OR TRACKED FROM VEHICLE OR SITE ONTO PUBLIC ROADWAY OR INTO STORM DRAIN MUST BE REMOVED.

12. ALL DITCH LINES DISTURBED DURING CONSTRUCTION SHALL BE STABILIZED BY THE CONTRACTOR. ON ALL NEW OR UNDISTURBED, UNPAVED DITCHES WITH A GRADE GREATER THAN 4%, INSTALL A TEMPORARY DITCH LINER OF FIBERGLASS ROVING ON THE DITCH BOTTOM AND SIDE SLOPES.

13. PROVIDE TEMPORARY ROCK SILT CHECK DAMS AT EACH STORM OUTFALL DITCH, AS SHOWN ON THE PLANS, AND AS DIRECTED BY THE ENGINEER.

14. ALL CONSTRUCTION WITHIN FLOWING STREAMS SHALL UTILIZE A PUMP TO BYPASS UPSTREAM CLEAN STREAM FLOW AROUND WORK AREA. PROCEDURES SHALL FOLLOW PUMP AROUND DETAILS IN THE PLANS.

15. ALL STREAM BANK WORK IS TO BE CONDUCTED DURING PREDICTED PERIODS OF DRY WEATHER.

16. ACCUMULATED SEDIMENT IS TO BE CLEANED FROM THE UPSTREAM SIDE OF IN STREAM CHECK DAMS AT THE END OF EACH WORK DAY. SPOIL/WASTE MATERIAL MAY BE MIXED WITH OTHER ON-SITE SOILS TO BE PLACED IN FILL AREAS, MAINTAINING COMPACTION REQUIREMENTS.

17. ROCKS LARGER THAN 5 INCHES ARE PROHIBITED WITHIN 3 FEET OF FINISHED GRADE WITHIN FILL SECTIONS.

18. GROUND STABILIZATION SHALL BE ACHIEVED CONSISTENT WITH NC DEQ GENERAL PERMIT NCG01000 EFFECTIVE AS OF AUGUST 2, 2011. WHERE LAND DISTURBING ACTIVITIES HAVE TEMPORARILY OR PERMANENTLY CEASED, ALL DISTURBED AREAS SHALL BE PROVIDED WITH TEMPORARY OR PERMANENT STABILIZATION WITH GROUND COVER WITHIN 14 CALENDAR DAYS FROM THE LAST LAND DISTURBING ACTIVITY EXCEPT FOR ALL PERIMETER DIKES, SWALES, DITCHES, PERIMETER SLOPES, AND ALL SLOPES STEEPER THAN 3:1 (H:V), WHICH SHALL BE PROVIDED TEMPORARY OR PERMANENT STABILIZATION WITH GROUND COVER WITHIN 7 CALENDAR DAYS FROM THE LAND DISTURBING ACTIVITY. THE CONTRACTOR SHALL REFER TO GENERAL PERMIT NCG01000 FOR SPECIFIC CONDITIONS, EXEMPTIONS, AND DEFINITIONS FOR MEETING THESE STABILIZATION REQUIREMENTS.

19. ALL EROSION AND SEDIMENT CONTROL MEASURES WILL BE CHECKED DAILY AND ANY DEFICIENCIES NOTED WILL BE CORRECTED BY THE END OF EACH DAY. ADDITIONAL EROSION AND SEDIMENT CONTROL MEASURES WILL BE INSTALLED IF DEEMED NECESSARY BY ON-SITE INSPECTION.

20. THE CONTRACTOR SHALL REMOVE ACCUMULATED SILT WHEN THE SILT IS WITHIN 12" OF THE TOP OF THE SILT FENCE UTILIZED FOR EROSION CONTROL.

21. REMOVE ALL EROSION AND SEDIMENT CONTROL DEVICES AND MEASURES UPON ESTABLISHMENT OF VEGETATIVE COVER, SURFACE STABILITY, AND COMPLETION OF PROJECT.

EROSION AND SEDIMENT CONTROL

THE CONTRACTOR SHALL MAINTAIN EROSION CONTROL DEVICES IN ACCORDANCE WITH THE APPROPRIATE CITY AND STATE EROSION AND SEDIMENT CONTROL ORDINANCES. THE CONTRACTOR SHALL PREVENT STANDING WATER DUE TO CONSTRUCTION. DISTURBED AREAS SHALL BE SEEDED AND MULCHED AT THE DIRECTION OF THE ENGINEER. THE CONTRACTOR SHALL FOLLOW THE EROSION CONTROL MEASURES SHOWN ON THE PLANS.

SEEDING SPECIFICATIONS

TEMPORARY SEEDING SCHEDULE		
DATE	SEEDING	PLANTING RATE
AUG. 15 – APR. 15	RYE (GRAIN)	40 LB./AC
APR. 15 – AUG 15	GERMAN MILLET OR BROWN TOP MILLET	10 LB./AC

SEEDING SCHEDULE

SEEDING SPECIFICATIONS (CONTINUED)

1. TEMPORARY SEEDING ALONE DOES NOT CONSTITUTE STABILIZED GROUND COVER AS NURSE CROPS MAY TAKE LONGER THAN 7 CALENDAR DAYS TO ESTABLISH.
2. APPLY GROUND LIMESTONE AT THE RATE OF 50 LB./1000 SF. ONLY IF SOIL TEST SHOWS THAT SOIL NEEDS LIME.
3. APPLY 10-1-1 (N-P-K) COMMERCIAL FERTILIZER AT THE RATE OF 25 LB./1000 SF.
4. MULCH WITH STRAW APPLIED AT THE RATE OF 100 LB./1000 SF.
5. HEAVILY MULCH DURING JANUARY – MARCH PERIOD.

SEEDBED PREPARATION NOTES

1. RUNOFF AND SURFACE WATER CONTROL MEASURES TO BE INSTALLED ACCORDING TO PLAN.
2. AREAS TO BE SEEDED SHALL BE RIPPED AND SPREAD WITH AVAILABLE TOPSOIL 3" DEEP. CONTRACTOR SHALL STOCKPILE TOPSOIL ON-SITE FOR THIS USE.
3. LOOSE ROCKS, ROOTS AND OTHER OBSTRUCTIONS SHALL BE REMOVED FROM THE SURFACE SO THAT THEY WILL NOT INTERFERE WITH ESTABLISHMENT AND MAINTENANCE OF VEGETATION. SURFACE FOR FINAL SEEDBED PREPARATION, AT FINISH GRADES SHOWN, SHALL BE REASONABLY SMOOTH AND UNIFORM.
4. IF NO SOIL TEST IS TAKEN, FERTILIZER AND LIME TO BE ACCORDING TO SEEDING SPECIFICATIONS ABOVE. IF SOIL TEST IS TAKEN, PROVIDE FERTILIZER AND LIME ACCORDING TO SOIL TEST REPORT.
5. FERTILIZER AND LIME SHALL BE APPLIED UNIFORMLY AND MIXED WITH THE SOIL DURING SEEDBED PREPARATION.
6. MULCH TO BE TACKED OR MECHANICALLY TIED DOWN WITH MATTING WHERE SPECIFIED WITHIN TWO DAYS AFTER MULCH IS SPREAD.

SEEDING SCHEDULE

TREES, SHRUBS, AND HEDGES:

1. THE CONTRACTOR SHALL REMOVE TREES, SHRUBS, AND HEDGES WITHIN THE LIMITS OF DISTURBANCE UNLESS SHOWN ON THE PLANS TO BE PROTECTED AND THOSE THAT FALL WITHIN THE TREE PROTECTION BARRIERS. THE CONTRACTOR SHALL ALSO PROTECT TREES AND SHRUBS OUTSIDE OF CUT/FILL LINES IN ADDITION TO THOSE THAT RECEIVE TREES/SHRUB PROTECTION BARRIERS. WHEN ROOT PRUNING IS NECESSARY, CUT ROOTS CLEANLY USING A DISC TRENCHER OR OTHER APPROVED METHOD.
2. CONTRACTOR SHALL OBTAIN APPROVAL FROM THE CITY PRIOR TO REMOVING ANY TREES. IN ADDITION, ALL TREES LOCATED WITHIN THE LIMITS OF DISTURBANCE THAT ARE TO REMAIN AFTER CONSTRUCTION SHALL BE INSPECTED BY THE CITY TO VERIFY THEY ARE SUITABLE TO REMAIN.
3. FOLLOWING CONSTRUCTION STAKING THE PROJECT TEAM (CONTRACTOR, CITY INSPECTOR AND ENGINEER, IF APPLICABLE) WILL HOLD AN ON-SITE MEETING TO ENSURE THE LIMITS OF DISTURBANCE AND THAT TREES PROPOSED FOR PROTECTION ARE CLEARLY IDENTIFIED. THE TEAM WILL WALK THE PROJECT AREA AND AGREE ON THE TREES TO BE PROTECTED AND THOSE TO REMOVE, DISCUSS PROPOSED CONSTRUCTION ACTIVITIES, AND IDENTIFY ANY ADDITIONAL TREES TO PROTECT THAT WERE NOT ORIGINALLY MARKED AS SUCH. THE CONTRACTOR WILL BE GIVEN APPROVAL FOR TREE REMOVAL, IN WRITING, AFTER APPROPRIATE TREE PROTECTION HAS BEEN INSTALLED AND BEFORE ANY CLEARING OR REMOVAL CAN BEGIN.
4. THERE WILL BE NO ADDITIONAL PAYMENT FOR TREE PROTECTION INSTALLED AROUND ADDITIONAL TREES IDENTIFIED FOR PROTECTION.

STANDARDS

NCDOT STANDARDS

THE FOLLOWING STANDARDS AND THE LATEST REVISION THERETO ARE APPLICABLE TO THIS PROJECT AND BY REFERENCE ARE CONSIDERED A PART OF THESE PLANS. NCDOT STANDARDS SHALL BE USED.

STD NO.:	DESCRIPTION:
300.02	METHOD OF PIPE INSTALLATION
840.00	CONCRETE BASE PAD FOR DRAINAGE STRUCTURES
840.32	BRICK JUNCTION BOX-12" THRU 66" PIPE
840.51	BRICK MANHOLE-12" THRU 36" PIPE
840.54	MANHOLE, FRAME AND COVER
840.66	DRAINAGE STRUCTURE STEPS
840.71	CONCRETE AND BRICK PIPE PLUG
840.72	PIPE COLLAR
850.01	CONCRETE PAVED DITCH
862.01	GUARDRAIL PLACEMENT
862.02	GUARDRAIL INSTALLATION
862.03	STRUCTURE ANCHOR UNITS
866.01	CHAIN LINK FENCE
876.01	RIP RAP IN CHANNELS
1631.01	MATTING INSTALLATION

Concord NORTH CAROLINA High Performance Living

HDR

PROJECT MANAGER	
PROJECT MANAGER	PB
CHECKED BY	RG
DRAWN BY	TM
PROJECT NUMBER	219915

ISSUE	DATE	DESCRIPTION
1	9/6/16	ISSUED FOR CONSTRUCTION

NORTH CAROLINA PROFESSIONAL SEAL 30971 ENGINEER PATRICK BLANDFORD 9/29/16

CITY OF CONCORD STORMWATER SERVICES
ALFRED M. BROWN OPERATIONS CENTER
850 Warren C. Coleman Blvd.
Concord, North Carolina 28026-0308

ZEMOSA ACRES CULVERT REPLACEMENT
GENERAL NOTES

0 1" 2"

FILENAME 00G-03.dwg
SCALE NONE
SHEET 00G-03

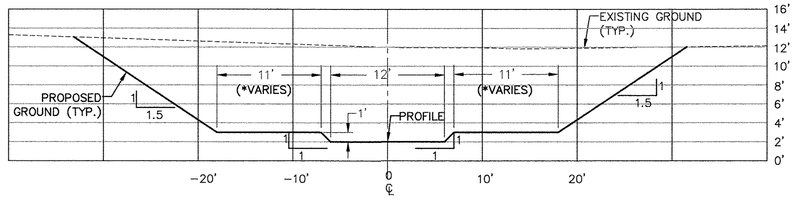

CHADBOURNE AVENUE – UPSTREAM

STA 02+41– STA 03+10

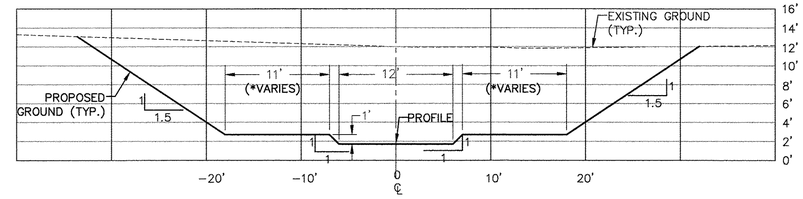

CHADBOURNE AVENUE – DOWNSTREAM

STA 01+22 – STA 01+92

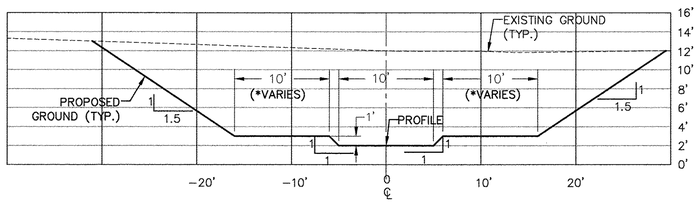

CHELWOOD DRIVE – UPSTREAM

STA 20+18 – STA 20+66

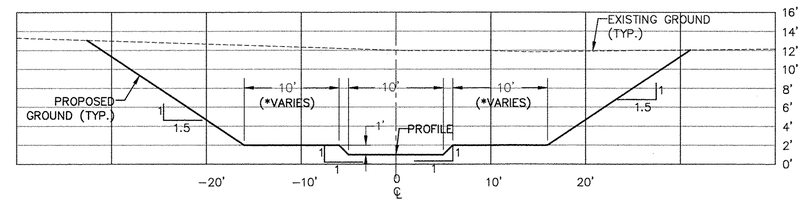

CHELWOOD DRIVE – DOWNSTREAM

STA 18+96 – STA 19+60

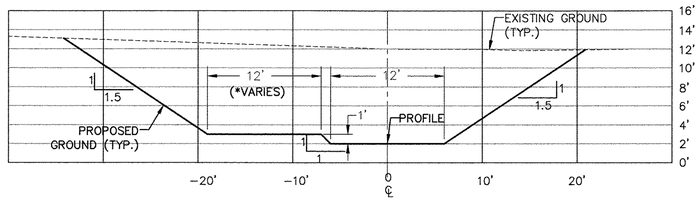

CHANNING CIRCLE – UPSTREAM

STA 28+74 – STA 29+19

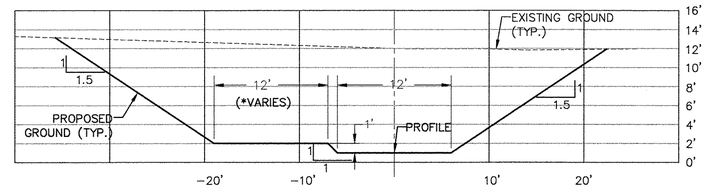

CHANNING CIRCLE – DOWNSTREAM

STA 27+17 – STA 27+77

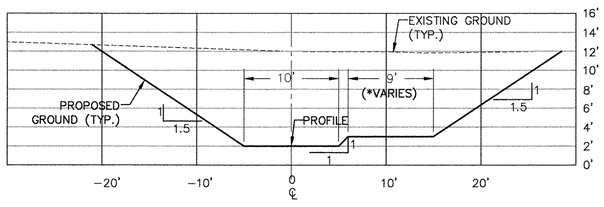

HANOVER DRIVE – UPSTREAM

STA 34+17 – STA 34+62

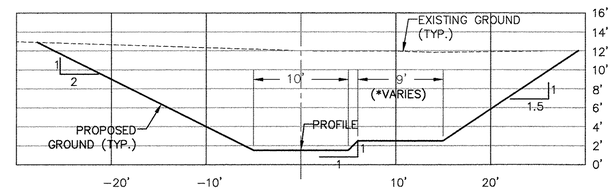

HANOVER DRIVE – DOWNSTREAM

STA 32+75 – STA 33+60

ALL X–SECTIONS ARE DISPLAYED LOOKING DOWNSTREAM

*VARIES– WIDTH SHOWN SHALL BE ESTABLISHED AT CULVERT THEN TAPERED TO EXISTING STREAMBANK

WING WALLS NOT SHOWN FOR FULL EFFECT OF TYPICAL SECTION

ISSUE	DATE	DESCRIPTION
1	9/6/16	ISSUED FOR CONSTRUCTION

PROJECT MANAGER	
PROJECT MANAGER	PB
CHECKED BY	RG
DRAWN BY	TM
PROJECT NUMBER	219915

NORTH CAROLINA PROFESSIONAL SEAL 30971 ENGINEER PATRICK BLANKENSHIP

9/29/16

CITY OF CONCORD STORMWATER SERVICES
ALFRED M. BROWN OPERATIONS CENTER
850 Warren C. Coleman Blvd.
Concord, North Carolina 28026-0308

ZEMOSA ACRES CULVERT REPLACEMENT
TYPICAL SECTIONS

0 1" 2"

FILENAME 00G-04.dwg
SCALE NOT TO SCALE

SHEET **00G-04**

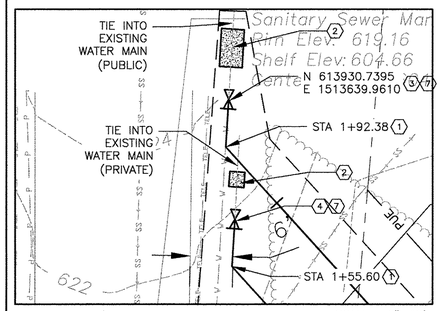

INSET A

SCALE= 1"=10'

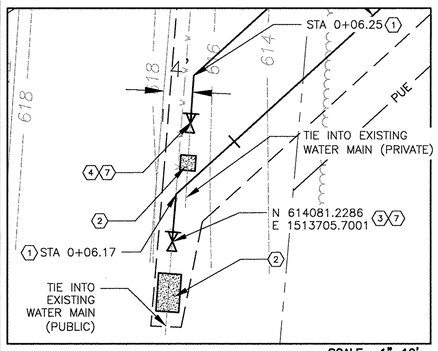

INSET B

SCALE= 1"=10'

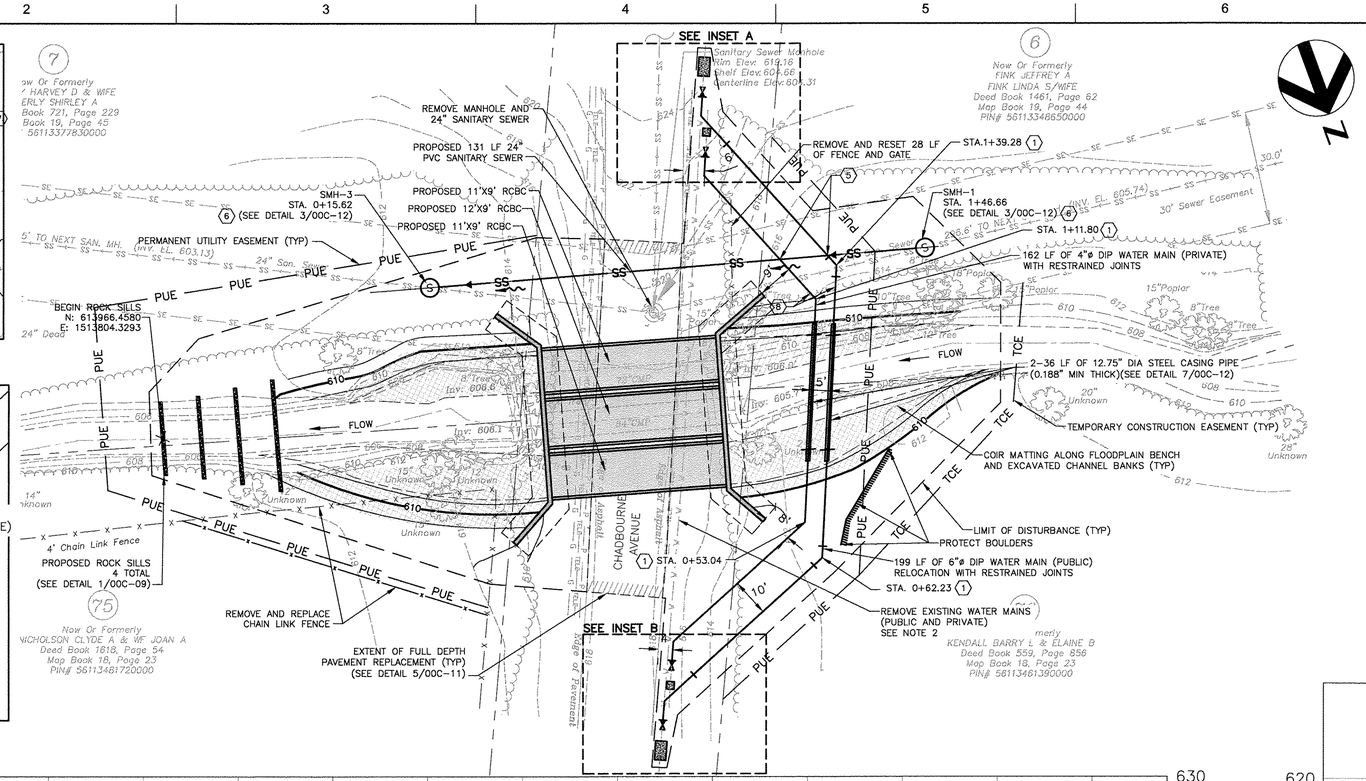

GENERAL NOTES:

1. EXISTING TELEPHONE, POWER, AND GAS TO BE RELOCATED BY OTHERS.
2. EXISTING PRIVATE 4" WATERLINE (UTILITIES, INC.) NOT SURVEYED. ALIGNMENT SHOWN IS APPROXIMATE AND IS TO BE FIELD VERIFIED PRIOR TO RELOCATION.
3. CHANNEL FILL MATERIAL SHALL BE MIXTURE OF EQUAL PARTS NATIVE MATERIAL, CLASS B RIPRAP AND #57 STONE.
4. CONTRACTOR TO PREPARE PUMP BY-PASS FOR SEWER WORK. SEE PROJECT SPECIAL SPECIFICATIONS FOR PLAN DETAILS AND APPROVAL PROCEDURE.
5. 100-YEAR WSEL DETERMINED AS PART OF NO-RISE SUBMITTAL TO CITY OF CONCORD 2015.
6. SEE SHEETS 00S-01 THRU 00S-06 FOR CONSTRUCTION OF HEADWALLS.
7. ELEVATION OF 6" WATERLINE TO BE FIELD VERIFIED PRIOR TO RELOCATION.

KEY NOTES:

(1) 45° BEND (SEE DETAIL 6/00C-12)

(2) CONCRETE ANCHOR (SEE DETAIL 6/00C-12)

(3) 6" GATE VALVE

(4) 4" GATE VALVE

(5) WATER MAIN TO BE MINIMUM 24" ABOVE SANITARY SEWER

(6) SANITARY SEWER MANHOLES SHALL BE SEALED WITH BOLTED WATER TIGHT COVER. SCREEN SMH-3 WITH VENT PIPE A MINIMUM OF 24" ABOVE 100-YEAR WSEL. (SEE DETAIL 2/00C-13).

(7) SEE DETAIL 4/00C-13 FOR VALVE BOX INSTALLATION

(8) PERFORM NECESSARY VERTICAL ADJUSTMENTS TO MEET MINIMUM CLEARANCE ABOVE 24" SANITARY SEWER.

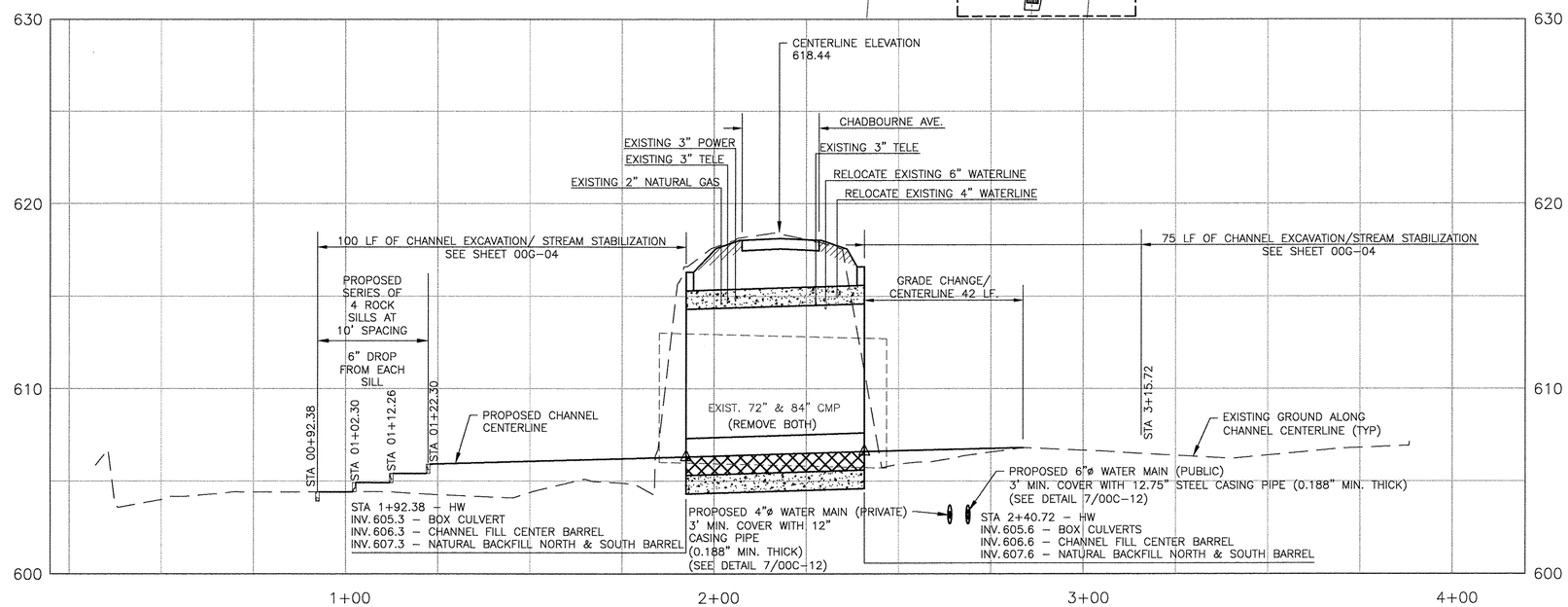

CULVERT PROFILE

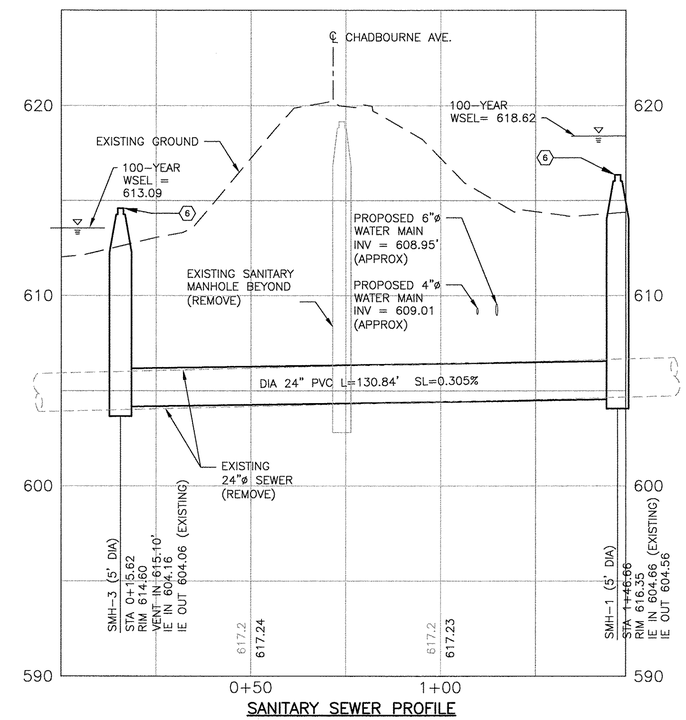

SANITARY SEWER PROFILE

ISSUE	DATE	DESCRIPTION
1	9/6/16	ISSUED FOR CONSTRUCTION

PROJECT MANAGER	
PROJECT MANAGER	PB
CHECKED BY	RG
DRAWN BY	TM
PROJECT NUMBER	219915

NORTH CAROLINA PROFESSIONAL SEAL 30971 ENGINEER PATRICK BLANKENSHIP 9/09/16

CITY OF CONCORD STORMWATER SERVICES
ALFRED M. BROWN OPERATIONS CENTER
850 Warren C. Coleman Blvd.
Concord, North Carolina 28026-0308

ZEMOSA ACRES CULVERT REPLACEMENT
CHADBOURNE AVENUE

0 1" 2"

FILENAME 00C-01.dwg
SCALE 1"=20' (H); 1"=4' (V)

SHEET **00C-01**

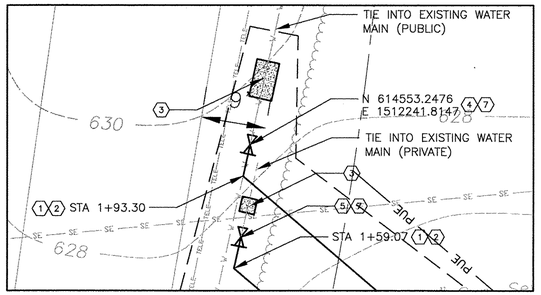

INSET A

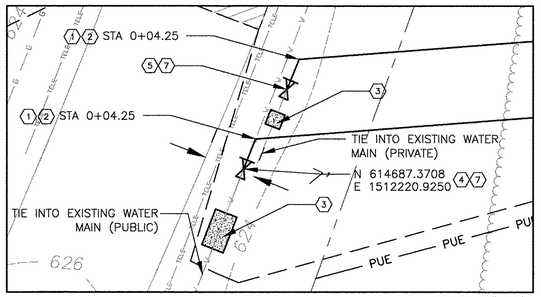

INSET B

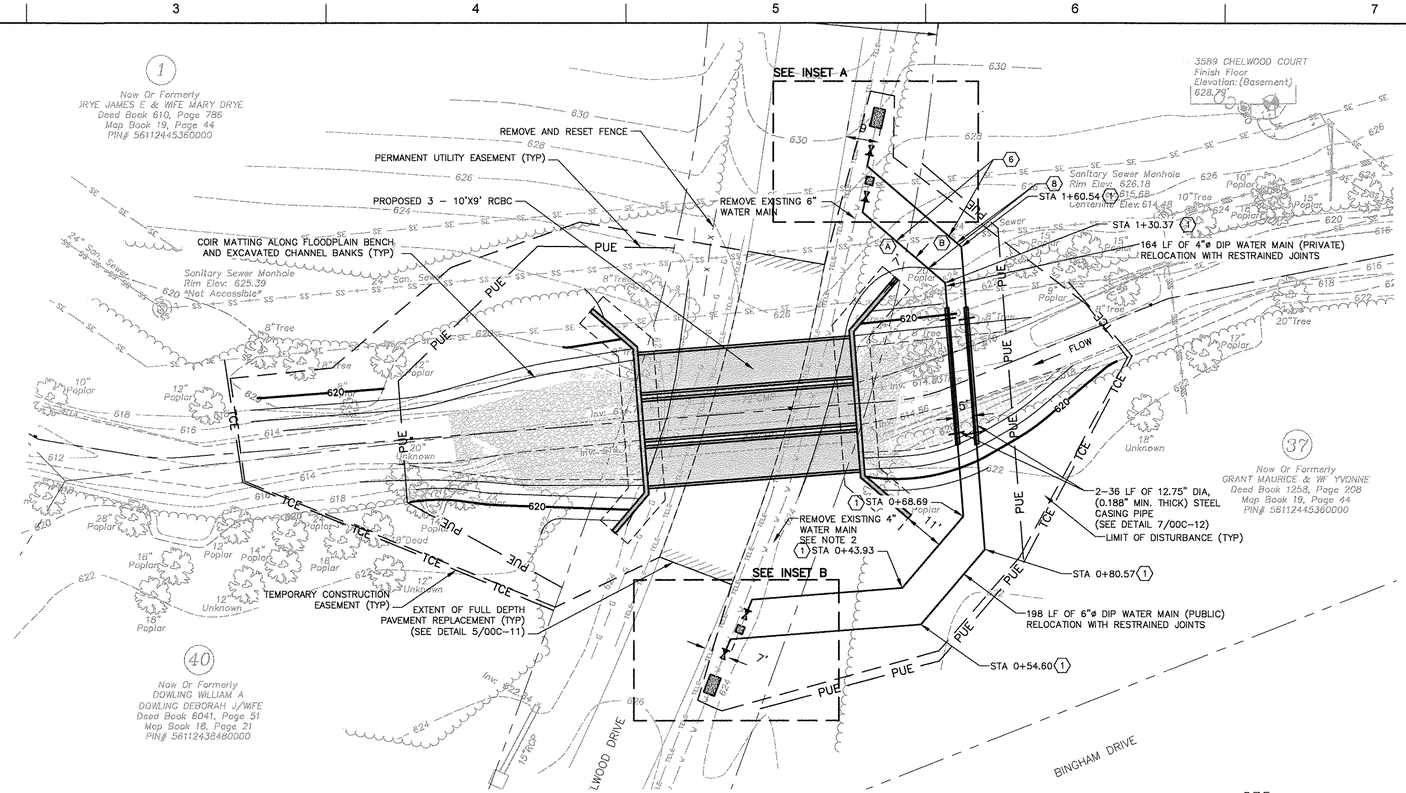

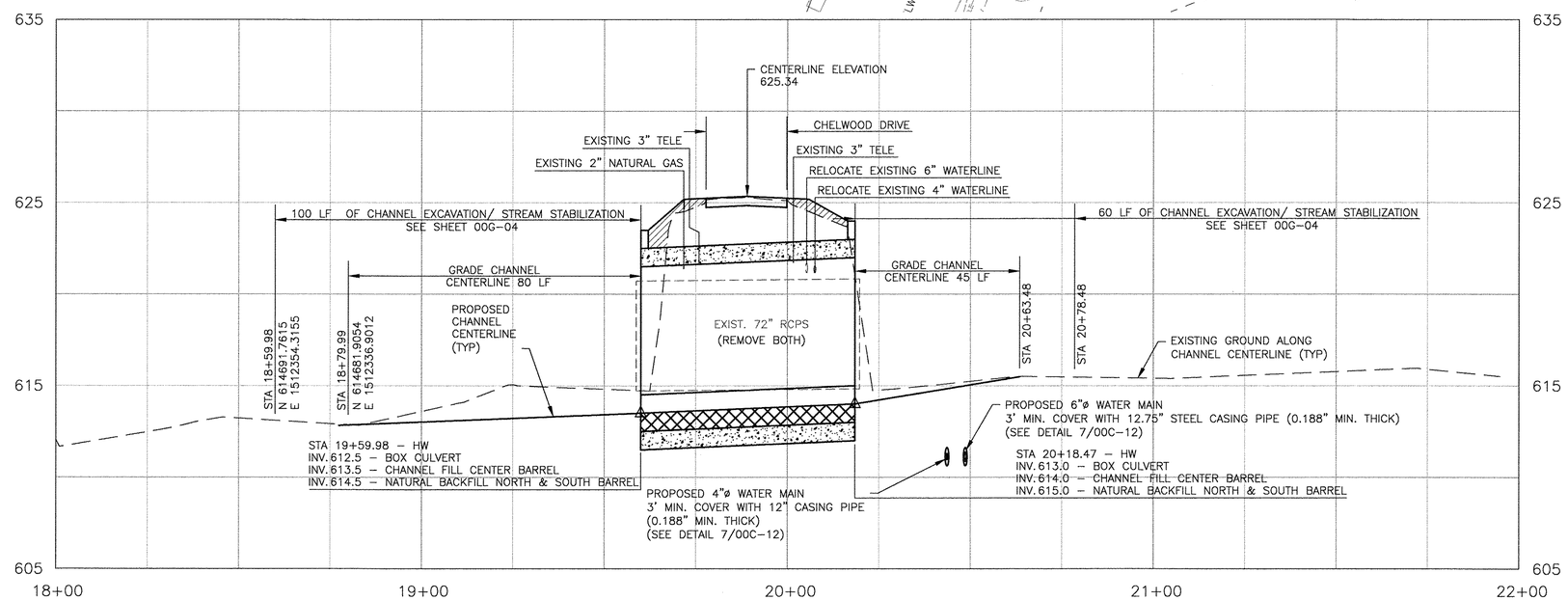

CULVERT PROFILE

GENERAL NOTES:

1. EXISTING TELEPHONE, POWER, AND GAS TO BE RELOCATED BY OTHERS.
2. EXISTING PRIVATE 4" WATERLINE (UTILITIES, INC.) NOT SURVEYED. ALIGNMENT SHOWN IS APPROXIMATE AND IS TO BE FIELD VERIFIED PRIOR TO RELOCATION.
3. CHANNEL FILL MATERIAL SHALL BE MIXTURE OF EQUAL PARTS MATERIAL, CLASS B RIPRAP AND #57 STONE.
4. 100–YEAR WSEL DETERMINED AS PART OF NO–RISE SUBMITTAL TO CITY OF CONCORD 2015.
5. SEE SHEETS 00S–01 THRU 00S–06 FOR CONSTRUCTION OF HEADWALLS.
6. ELEVATION OF 6" WATERLINE TO BE FIELD VERIFIED PRIOR TO RELOCATION.

KEY NOTES:

(1) 45° BEND (SEE DETAIL 6/00C–12)

(2) 22.5° BEND (SEE DETAIL 6/00C–12)

(3) CONCRETE ANCHOR (SEE DETAIL 6/00C–12)

(4) 6" GATE VALVE

(5) 4" GATE VALVE

(6) WATER MAIN TO BE MINIMUM 24" ABOVE SANITARY SEWER.

(7) SEE DETAIL 4/00C–13 FOR VALVE BOX INSTALLATION.

(8) PERFORM NECESSARY VERTICAL ADJUSTMENTS TO MEET MINIMUM CLEARANCE ABOVE 24" SANITARY SEWER.

(A) FINAL GRADE = 625.60'
4" DIP INVERT = 618.96' (APPROX.)
TOP OF 24" PVC SEWER = 616.52'

(B) FINAL GRADE = 624.80'
6" DIP INVERT = 618.88' (APPROX.)
TOP OF 24" PVC SEWER = 616.56'

Concord NORTH CAROLINA High Performance Living

HDR

ISSUE	DATE	DESCRIPTION
1	9/6/16	ISSUED FOR CONSTRUCTION

PROJECT MANAGER	
PROJECT MANAGER	PB
CHECKED BY	RG
DRAWN BY	TM
PROJECT NUMBER	219915

NORTH CAROLINA PROFESSIONAL SEAL 30971 ENGINEER PATRICK BLANKENSHIP
9/29/16

CITY OF CONCORD STORMWATER SERVICES
ALFRED M. BROWN OPERATIONS CENTER
850 Warren C. Coleman Blvd.
Concord, North Carolina 28026-0308

ZEMOSA ACRES CULVERT REPLACEMENT
CHELWOOD DRIVE

0 1" 2"

FILENAME 00C-02.dwg
SCALE 1"=20' (H); 1"=4' (V)

SHEET **00C-02**

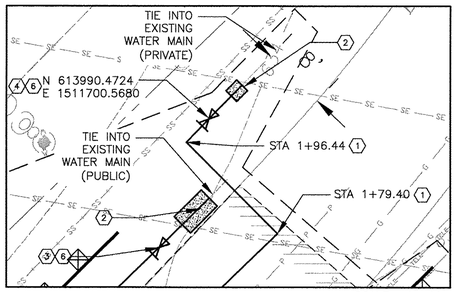

INSET A

SCALE= 1"=10'

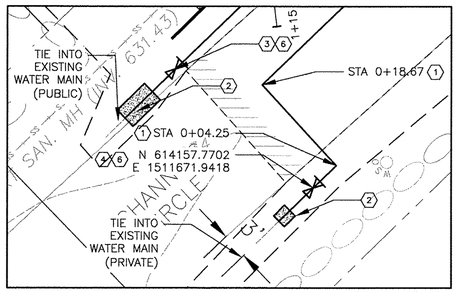

INSET B

SCALE= 1"=10'

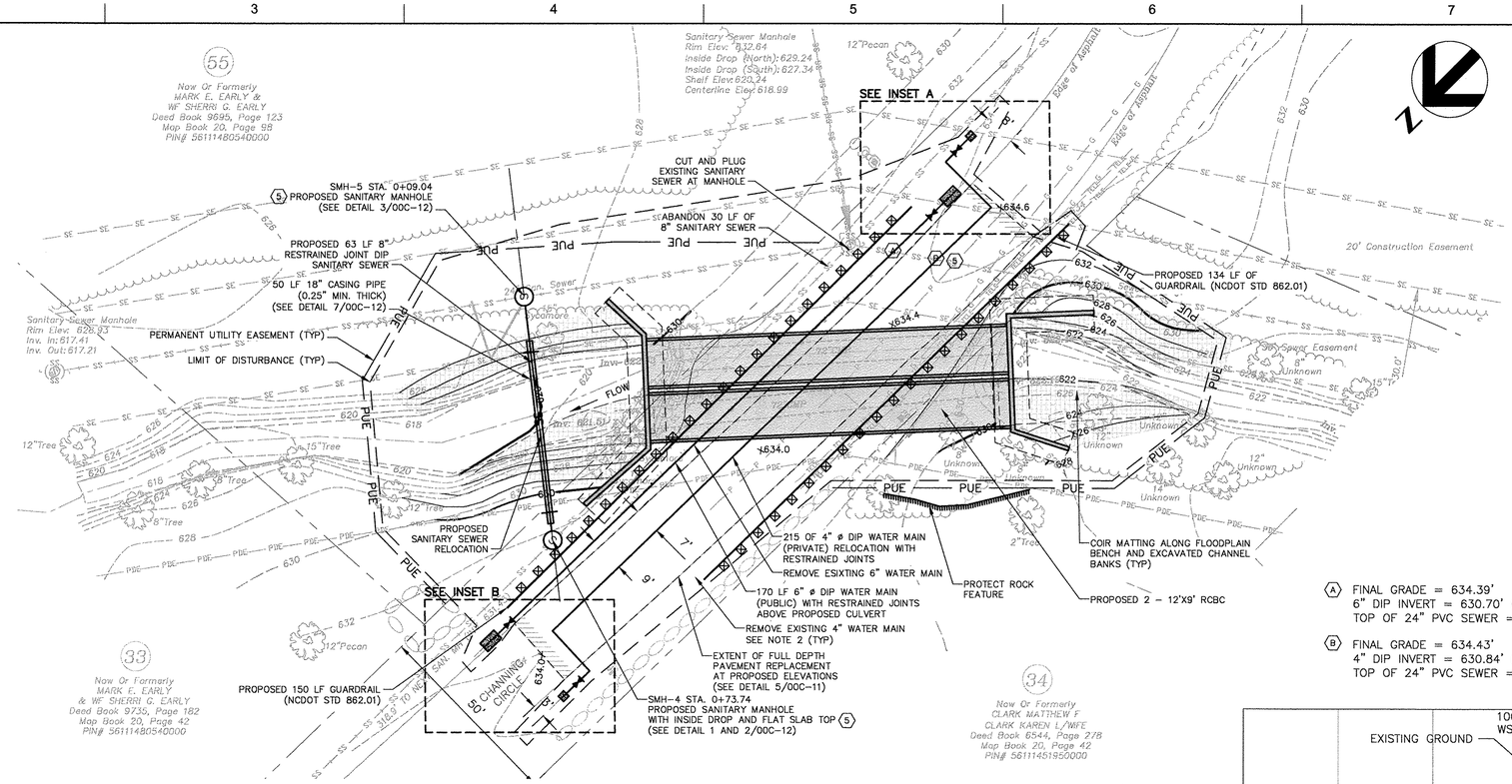

GENERAL NOTES:

1. EXISTING TELEPHONE, POWER, AND GAS TO BE RELOCATED BY OTHERS.
2. EXISTING PRIVATE 4" WATERLINE (UTILITIES, INC.) NOT SURVEYED. ALIGNMENT SHOWN IS APPROXIMATE AND IS TO BE FIELD VERIFIED PRIOR TO RELOCATION.
3. CHANNEL FILL MATERIAL SHALL BE MIXTURE OF EQUAL PARTS NATIVE MATERIAL, CLASS B RIPRAP AND #57 STONE.
4. 100-YEAR WSEL DETERMINED AS PART OF NO-RISE SUBMITTAL TO CITY OF CONCORD 2015.
5. CONTRACTOR TO PREPARE PUMP BY-PASS FOR SEWER WORK. SEE PROJECT SPECIAL SPECIFICATIONS FOR PLAN DETAILS AND APPROVAL PROCEDURE.
6. SEE SHEET 00S-01 THRU 00S-06 FOR CONSTRUCTION OF HEADWALLS.
7. ELEVATION OF 6" WATERLINE TO BE FIELD VERIFIED PRIOR TO RELOCATION.

KEYNOTES:

1. 90° BEND (SEE DETAIL 3/00C-12)
2. CONCRETE ANCHOR (SEE DETAIL 3/00C-12)
3. 6" GATE VALVE
4. 4" GATE VALVE
5. SANITARY SEWER MANHOLES SHALL BE SEALED WITH BOLTED WATER TIGHT COVER. SCREEN SMH-5 WITH VENT PIPE A MINIMUM 24" ABOVE 100-YEAR WSEL (SEE DETAIL 2/00C-13).
6. SEE DETAIL 4/00C-13 FOR VALVE BOX INSTALLATION.
7. WATER MAIN TO BE 24" ABOVE SANITARY SEWER

(A) FINAL GRADE = 634.39'
6" DIP INVERT = 630.70' (APPROX)
TOP OF 24" PVC SEWER = 621.33'

(B) FINAL GRADE = 634.43'
4" DIP INVERT = 630.84' (APPROX)
TOP OF 24" PVC SEWER = 621.43'

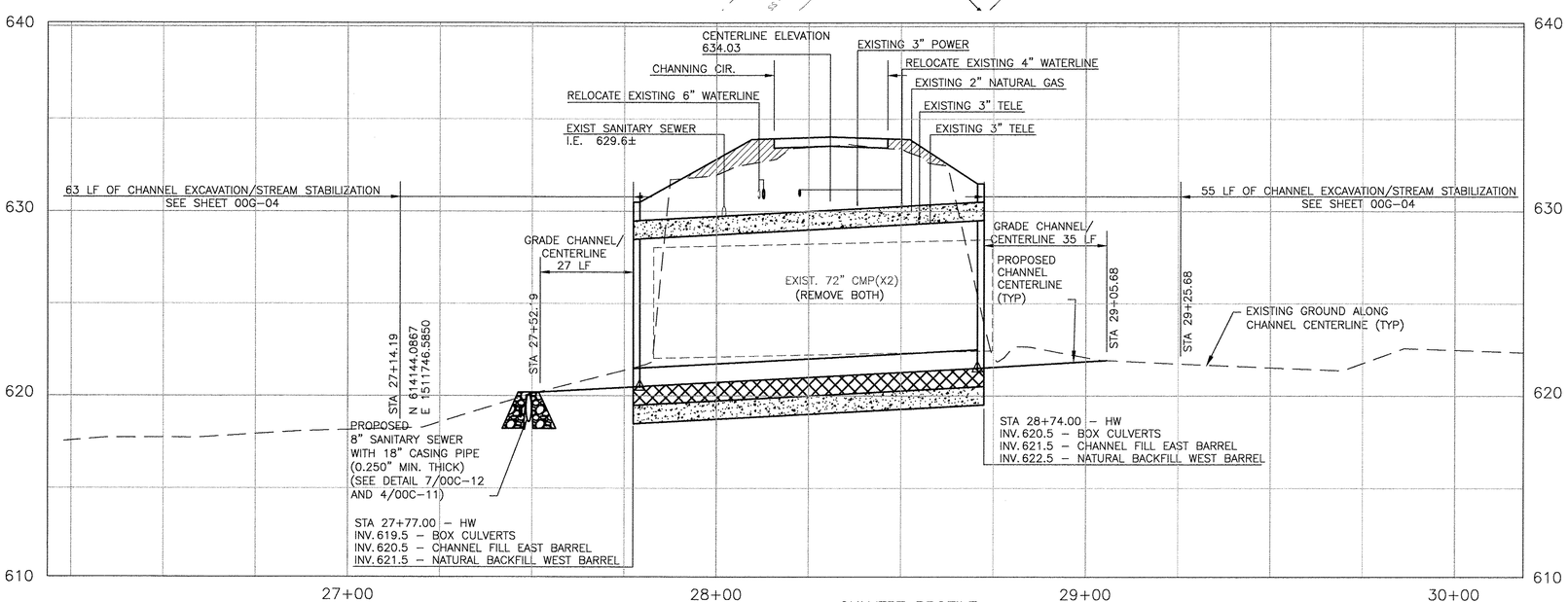

CULVERT PROFILE

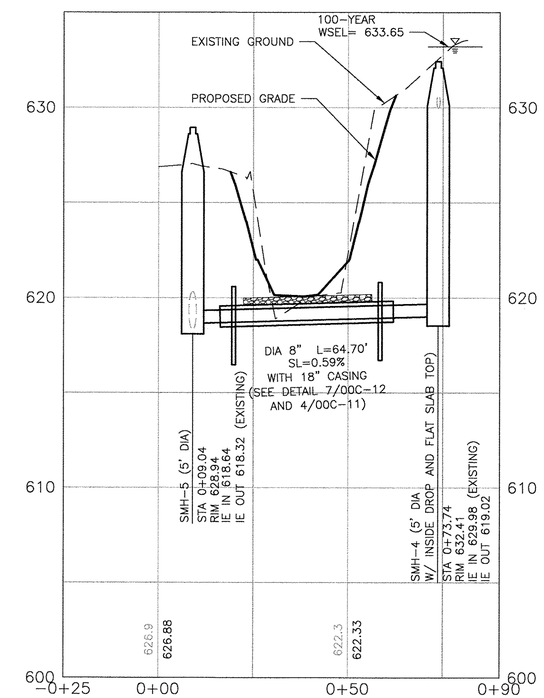

SANITARY SEWER PROFILE

Concord NORTH CAROLINA High Performance Living

HDR

ISSUE	DATE	DESCRIPTION
1	9/6/16	ISSUED FOR CONSTRUCTION

PROJECT MANAGER	
PROJECT MANAGER	PB
CHECKED BY	RG
DRAWN BY	TM
PROJECT NUMBER	219915

NORTH CAROLINA PROFESSIONAL SEAL 30971 ENGINEER PATRICK BRANNEGAN 9/29/16

CITY OF CONCORD STORMWATER SERVICES
ALFRED M. BROWN OPERATIONS CENTER
850 Warren C. Coleman Blvd.
Concord, North Carolina 28026-0308

ZEMOSA ACRES CULVERT REPLACEMENT
CHANNING CIRCLE

0 1" 2"

FILENAME 00C-03.dwg
SCALE 1"=20' (H); 1"=4' (V)

SHEET 00C-03

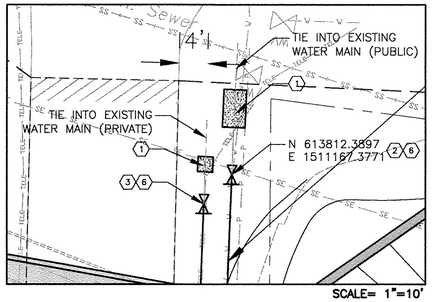

INSET A

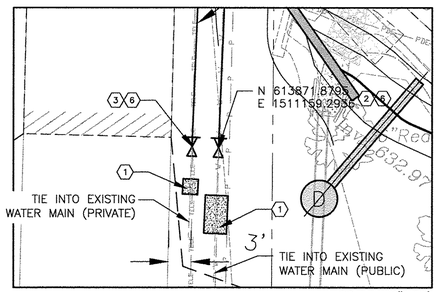

INSET B

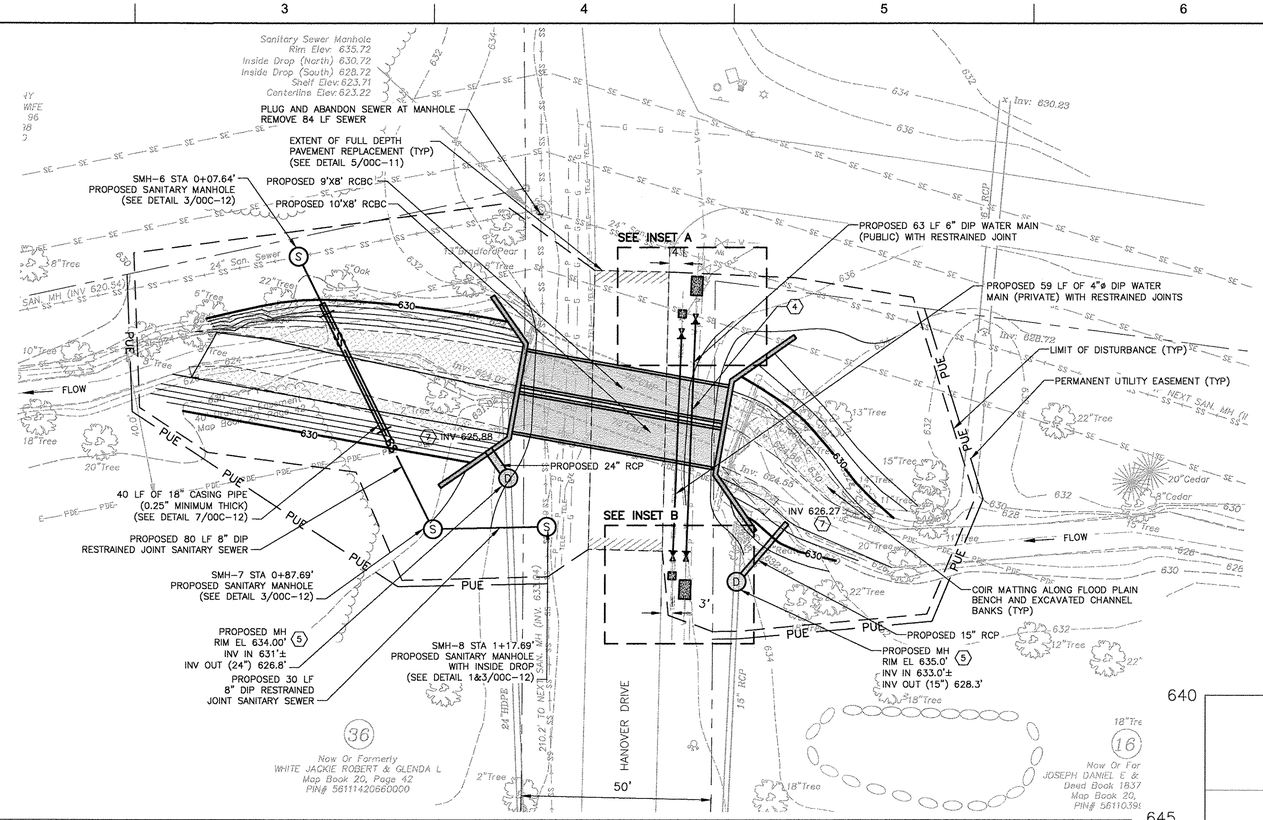

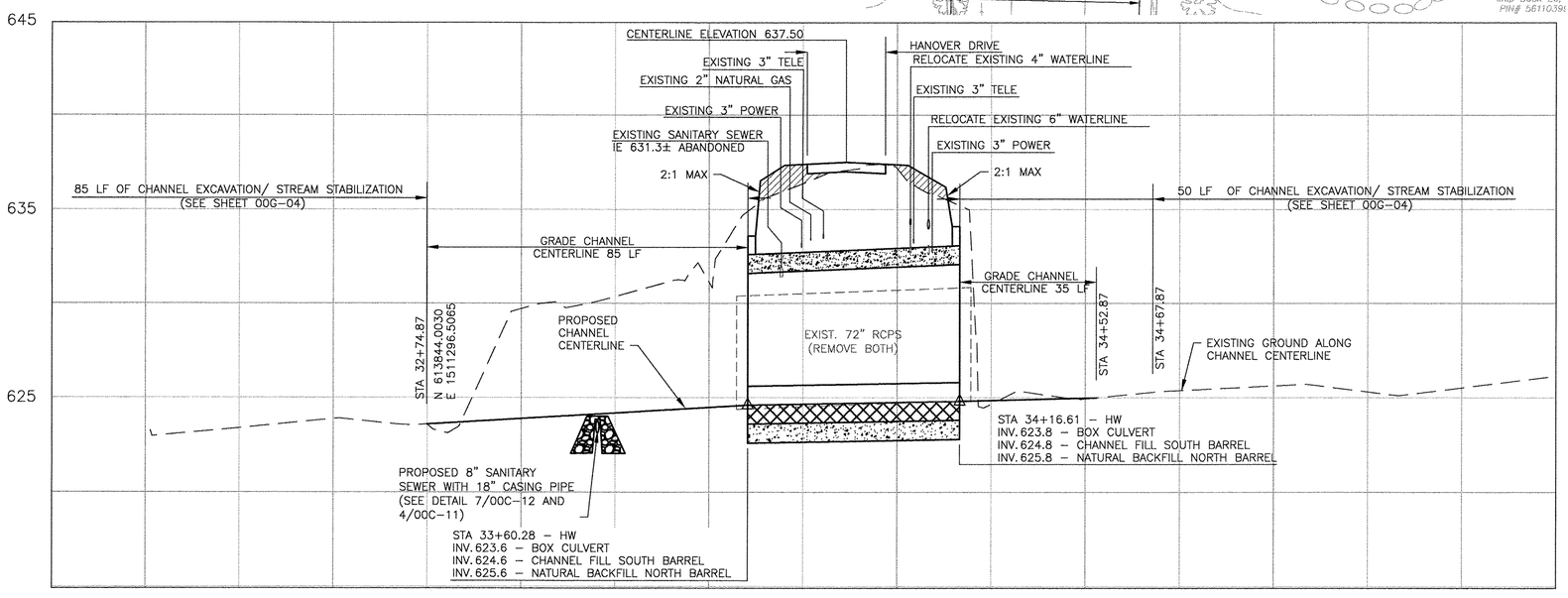

CULVERT PROFILE

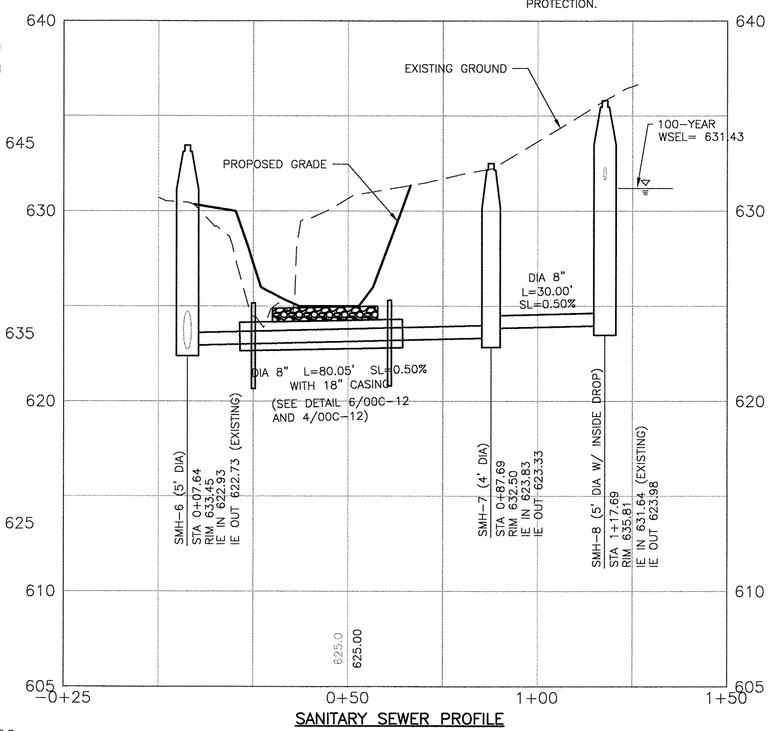

SANITARY SEWER PROFILE

GENERAL NOTES:

1. EXISTING TELEPHONE, POWER, AND GAS TO BE RELOCATED BY OTHERS.
2. EXISTING PRIVATE 4" WATERLINE (UTILITIES, INC.) NOT SURVEYED. ALIGNMENT SHOWN IS APPROXIMATE AND IS TO BE FIELD VERIFIED PRIOR TO RELOCATION.
3. CHANNEL FILL MATERIAL SHALL BE MIXTURE OF EQUAL PARTS NATIVE MATERIAL, CLASS B RIPRAP AND #57 STONE.
4. CONTRACTOR TO PREPARE PUMP BY-PASS FOR SEWER WORK. SEE PROJECT SPECIAL SPECIFICATIONS FOR PLAN DETAILS AND APPROVAL PROCEDURE.
5. 100-YEAR WSEL DETERMINED AS PART OF NO-RISE SUBMITTAL TO CITY OF CONCORD 2015.
6. SEE SHEET 00S-01 THRU 00S-06 FOR CONSTRUCTION OF HEADWALLS.
7. ELEVATION OF 6" WATERLINE TO BE FIELD VERIFIED PRIOR TO RELOCATION.

KEY NOTES:

(1) CONCRETE ANCHOR (SEE DETAIL 6/00C-12)
(2) 6" GATE VALVE
(3) 4" GATE VALVE
(4) WATER MAIN TO HAVE 3' COVER AND 1' OF SEPARATION WITH CULVERT.
(5) STORM DRAIN MANHOLES TO BE CONSTRUCTED PER NCDOT STD. 840.51 AND 840.54.
(6) SEE DETAIL 4/00C-13 FOR VALVE BOX INSTALLATION.
(7) SEE DETAIL 3/00C-11 FOR OUTFALL PROTECTION.

Concord NORTH CAROLINA High Performance Living

HDR

ISSUE	DATE	DESCRIPTION
1	9/6/16	ISSUED FOR CONSTRUCTION

PROJECT MANAGER	
PROJECT MANAGER	PB
CHECKED BY	RG
DRAWN BY	TM
PROJECT NUMBER	219915

NORTH CAROLINA PROFESSIONAL SEAL 30971 ENGINEER PATRICK BRADSHAW 9/09/16

CITY OF CONCORD STORMWATER SERVICES
ALFRED M. BROWN OPERATIONS CENTER
850 Warren C. Coleman Blvd.
Concord, North Carolina 28026-0308

ZEMOSA ACRES CULVERT REPLACEMENT
HANOVER DRIVE

0 1" 2"

FILENAME 00C-04.dwg
SCALE 1"=20' (H); 1"=4' (V)

SHEET **00C-04**

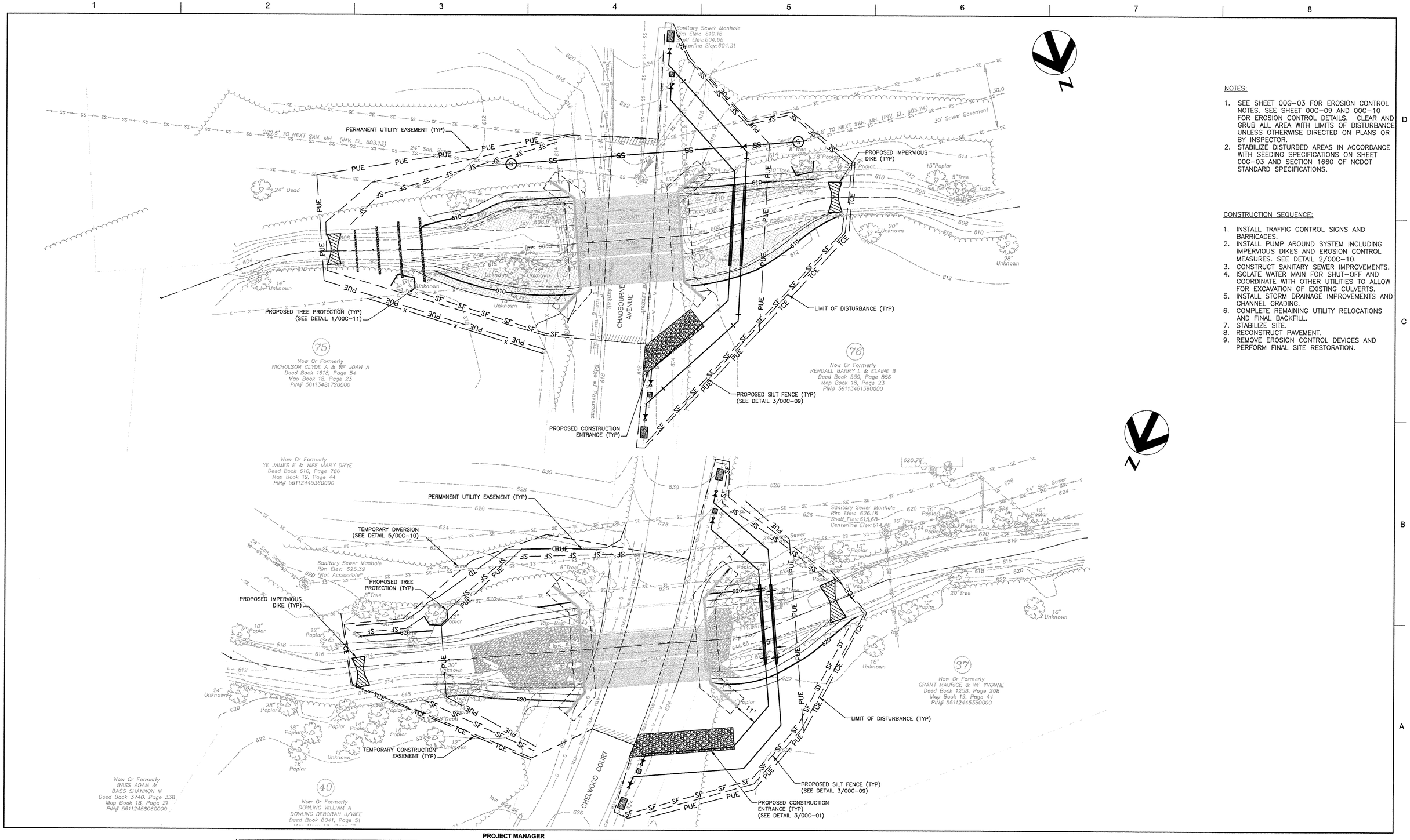

NOTES:

1. SEE SHEET 00G-03 FOR EROSION CONTROL NOTES. SEE SHEET 00C-09 AND 00C-10 FOR EROSION CONTROL DETAILS. CLEAR AND GRUB ALL AREA WITH LIMITS OF DISTURBANCE UNLESS OTHERWISE DIRECTED ON PLANS OR BY INSPECTOR.
2. STABILIZE DISTURBED AREAS IN ACCORDANCE WITH SEEDING SPECIFICATIONS ON SHEET 00G-03 AND SECTION 1660 OF NCDOT STANDARD SPECIFICATIONS.

CONSTRUCTION SEQUENCE:

1. INSTALL TRAFFIC CONTROL SIGNS AND BARRICADES.
2. INSTALL PUMP AROUND SYSTEM INCLUDING IMPERVIOUS DIKES AND EROSION CONTROL MEASURES. SEE DETAIL 2/00C-10.
3. CONSTRUCT SANITARY SEWER IMPROVEMENTS.
4. ISOLATE WATER MAIN FOR SHUT-OFF AND COORDINATE WITH OTHER UTILITIES TO ALLOW FOR EXCAVATION OF EXISTING CULVERTS.
5. INSTALL STORM DRAINAGE IMPROVEMENTS AND CHANNEL GRADING.
6. COMPLETE REMAINING UTILITY RELOCATIONS AND FINAL BACKFILL.
7. STABILIZE SITE.
8. RECONSTRUCT PAVEMENT.
9. REMOVE EROSION CONTROL DEVICES AND PERFORM FINAL SITE RESTORATION.

Concord NORTH CAROLINA High Performance Living

HDR

ISSUE	DATE	DESCRIPTION
1	9/6/16	ISSUED FOR CONSTRUCTION

PROJECT MANAGER	
PROJECT MANAGER	PB
CHECKED BY	RG
DRAWN BY	TM
PROJECT NUMBER	219915

NORTH CAROLINA PROFESSIONAL SEAL 30971 ENGINEER PATRICK BLANKENSHIP 9/29/16

CITY OF CONCORD STORMWATER SERVICES
ALFRED M. BROWN OPERATIONS CENTER
850 Warren C. Coleman Blvd.
Concord, North Carolina 28026-0308

ZEMOSA ACRES CULVERT REPLACEMENT
EROSION AND SEDIMENT CONTROL PLAN

0 1" 2"

FILENAME 00C-05.dwg
SCALE 1"=20'

SHEET **00C-05**

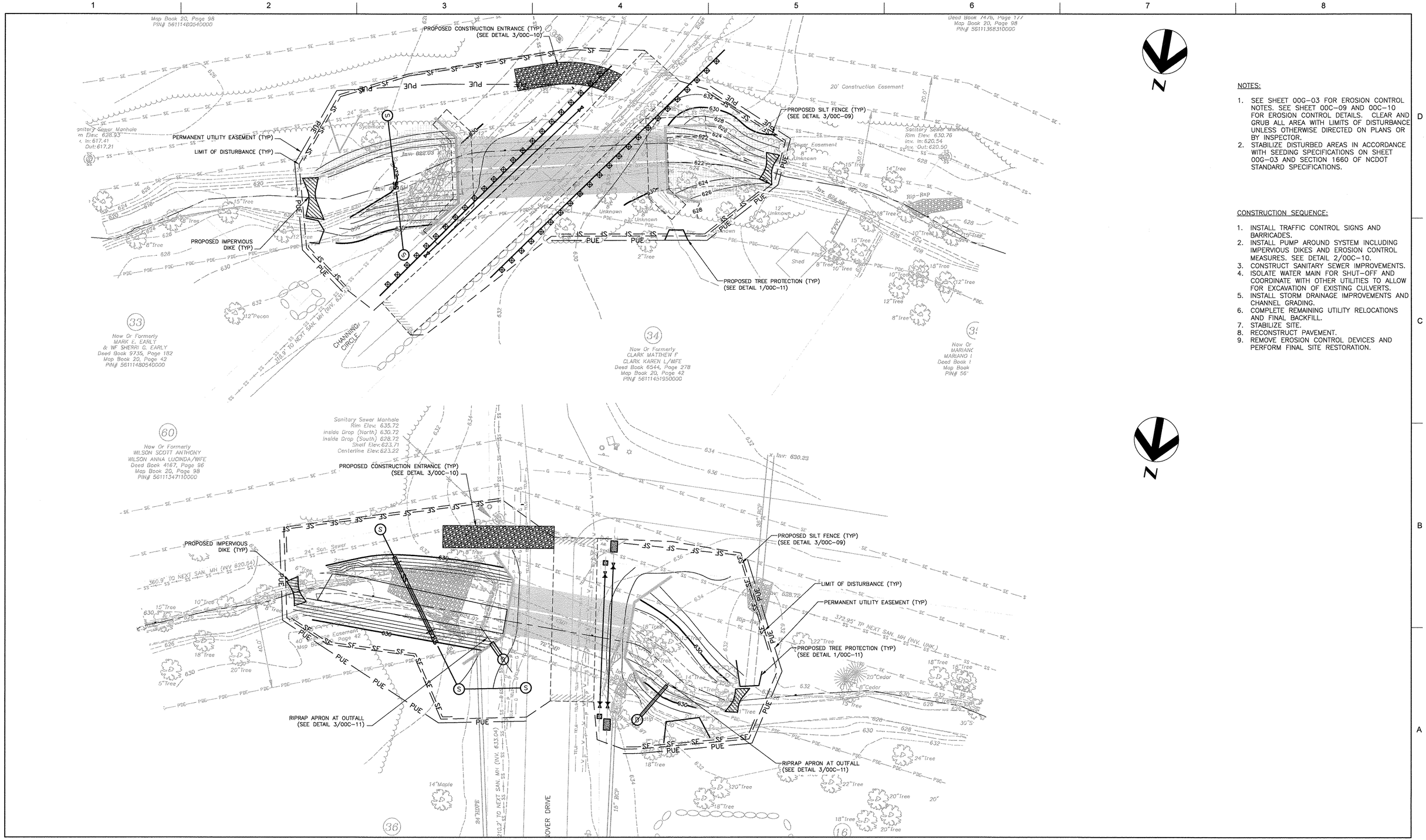

N

N

NOTES:

1. SEE SHEET 00G-03 FOR EROSION CONTROL NOTES. SEE SHEET 00C-09 AND 00C-10 FOR EROSION CONTROL DETAILS. CLEAR AND GRUB ALL AREA WITH LIMITS OF DISTURBANCE UNLESS OTHERWISE DIRECTED ON PLANS OR BY INSPECTOR.
2. STABILIZE DISTURBED AREAS IN ACCORDANCE WITH SEEDING SPECIFICATIONS ON SHEET 00G-03 AND SECTION 1660 OF NCDOT STANDARD SPECIFICATIONS.

CONSTRUCTION SEQUENCE:

1. INSTALL TRAFFIC CONTROL SIGNS AND BARRICADES.
2. INSTALL PUMP AROUND SYSTEM INCLUDING IMPERVIOUS DIKES AND EROSION CONTROL MEASURES. SEE DETAIL 2/00C-10.
3. CONSTRUCT SANITARY SEWER IMPROVEMENTS.
4. ISOLATE WATER MAIN FOR SHUT-OFF AND COORDINATE WITH OTHER UTILITIES TO ALLOW FOR EXCAVATION OF EXISTING CULVERTS.
5. INSTALL STORM DRAINAGE IMPROVEMENTS AND CHANNEL GRADING.
6. COMPLETE REMAINING UTILITY RELOCATIONS AND FINAL BACKFILL.
7. STABILIZE SITE.
8. RECONSTRUCT PAVEMENT.
9. REMOVE EROSION CONTROL DEVICES AND PERFORM FINAL SITE RESTORATION.

Concord NORTH CAROLINA High Performance Living

HDR

ISSUE	DATE	DESCRIPTION
1	9/6/16	ISSUED FOR CONSTRUCTION

PROJECT MANAGER	
PROJECT MANAGER	PB
CHECKED BY	RG
DRAWN BY	TM
PROJECT NUMBER	219915

NORTH CAROLINA PROFESSIONAL SEAL 30971 ENGINEER PATRICK BLANKENSHIP 9/29/16

CITY OF CONCORD STORMWATER SERVICES
ALFRED M. BROWN OPERATIONS CENTER
850 Warren C. Coleman Blvd.
Concord, North Carolina 28026-0308

ZEMOSA ACRES CULVERT REPLACEMENT
EROSION AND SEDIMENT CONTROL PLAN

0 1" 2"

FILENAME 00C-06.dwg
SCALE 1"=20'

SHEET **00C-06**

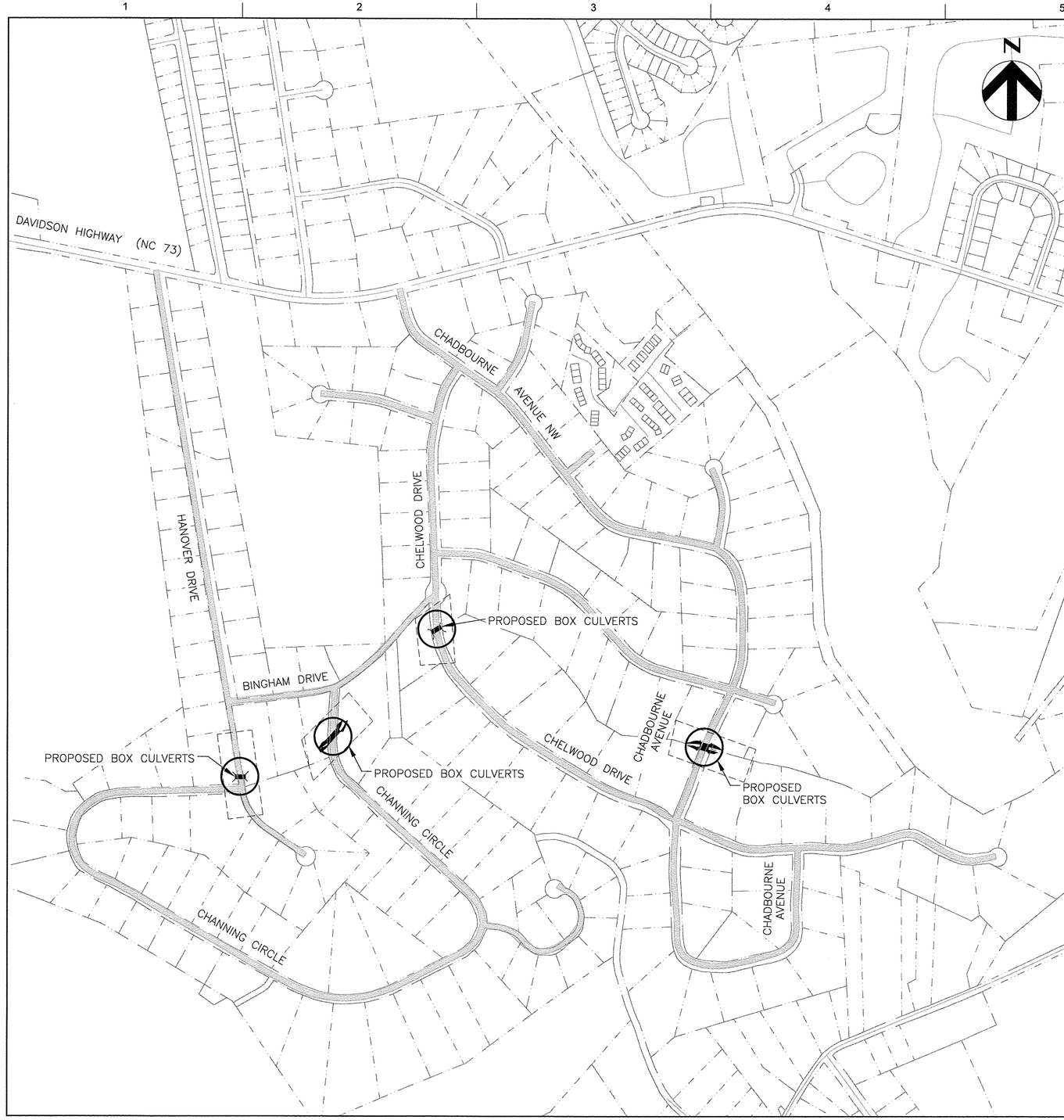

GENERAL NOTES

A) ALL TRAFFIC CONTROL DEVICES SHALL CONFORM TO THE REQUIREMENTS OF THE MOST CURRENT EDITIONS OF THE CONCORD TRANSPORTATION DEPARTMENT (CTD), THE MANUAL ON UNIFORM TRAFFIC CONTROL DEVICES(M.U.T.C.D.), THE NORTH CAROLINA DEPARTMENT OF TRANSPORTATION(NCDOT) SUPPLEMENT TO THE M.U.T.C.D., THE NCDOT ROADWAY STANDARD DRAWINGS AND THE CURRENT EDITION OF THE NCDOT STANDARD SPECIFICATIONS FOR ROADS AND STRUCTURES.

B) THE CONTRACTOR IS TO NOTIFY CTD IN WRITING 10 WORKING DAYS IN ADVANCE OF ANY ROAD CLOSURE OR 5 WORKING DAYS PRIOR TO CLOSING ONE OR MORE TRAVEL LANES.

C) THE CONTRACTOR SHALL BE REQUIRED TO FURNISH, INSTALL, RELOCATE, AND MAINTAIN ALL TRAFFIC CONTROL DEVICES, SIGNS, BARRICADES, WARNING AND/OR CHANNELIZING DEVICES FOR WORK SITES AND DETOUR ROUTES AS SHOWN IN TRAFFIC CONTROL PLANS UNLESS OTHERWISE SPECIFIED BY THE ENGINEER.

D) CONSTRUCTION PHASING MAY DICTATE THAT TWO OR MORE TYPICAL STANDARDS BE USED IN ONE AREA OF CONSTRUCTION. CHANNELIZING DEVICES ASSOCIATED WITH THESE TYPICALS SHALL BE MOVED, SUPPLEMENTED, CHANGED, OR REMOVED AS NECESSARY TO COMPLY WITH THE CONSTRUCTION PHASING OF THE PLANS. THE LOCATION AND POSITIONING OF THESE DEVICES SHALL BE APPROVED BY THE ENGINEER TO ENSURE THAT THE MOTORIST DOES NOT RECEIVE FALSE INFORMATION WHEN TWO OR MORE TYPICALS AND/OR ROADWAY STANDARD DRAWINGS OVERLAP.

E) CONTRACTOR SHOULD BE AWARE THAT WHEN THE CONSTRUCTION AREA IS IN OR NEAR A VERTICAL CREST OR HORIZONTAL CURVE, THE WORK AREA SHALL BE EXTENDED SO THAT LANE CLOSURE BEGINS IN ADVANCE OF THE CURVE AND MINIMUM STOPPING SIGHT DISTANCE IS MET.

F) THE CONTRACTOR SHALL MARK ALL HAZARDS WITHIN THE LIMITS OF THE PROJECT WITH WELL-MAINTAINED SIGNS, BARRICADES, WARNING AND/OR CHANNELIZING DEVICES. ON CONNECTING ROADS, ALL BARRICADES, SIGNS, WARNING, AND/OR CHANNELIZING DEVICES SHALL BE MOVED, SUPPLEMENTED, CHANGED, OR REMOVED AS REQUIRED DURING THE PROGRESS OF CONSTRUCTION AS APPROVED BY THE ENGINEER.

G) WORK ON THE PROJECT OR ANY SEPARATE ACTIVITY THEREIN SHALL NOT START UNTIL ALL OF THE REQUIRED SIGNS, BARRICADES, WARNING, AND/OR CHANNELIZING DEVICES ARE INSTALLED AND APPROVED BY THE ENGINEER.

H) THE CONTRACTOR SHALL CONTACT DEL EUDY, IMPLEMENTATION SECTION MANAGER (704-920-5367) WITH THE CITY OF CONCORD TRANSPORTATION TWO WEEKS PRIOR TO BEGINNING ANY WORK THAT WILL REQUIRE THE RELOCATION OR PLACEMENT OF SIGNS OR OTHER TRAFFIC CONTROL DEVICES BY THE CITY.

I) THE CONTRACTOR MUST MAINTAIN DURING ALL PERIODS OF CONSTRUCTION ACTIVITY THE ABILITY TO FLAG TRAFFIC USING QUALIFIED FLAGGERS WHEN NECESSARY OR REQUIRED

J) THE CONTRACTOR SHALL INSTALL TEMPORARY PAVEMENT MARKINGS AND ADDRESS CONFLICTING PAVEMENT MARKINGS AS DIRECTED BY THE ENGINEER. THE CONTRACTOR SHALL MAINTAIN ANY EXISTING PAVEMENT MARKINGS UNLESS OTHERWISE DIRECTED BY THE ENGINEER.

K) THE CONTRACTOR SHALL MAINTAIN TWO WAY TRAFFIC ON ALL PORTIONS OF THIS PROJECT UNLESS OTHERWISE SPECIFIED IN THE PLANS, PROJECT NOTES, OR BY THE ENGINEER,

L) CONTRACTOR WILL BE REQUIRED TO PROVIDE PROPERTY OWNERS AND TENANTS ACCESS TO THEIR PROPERTY THROUGHOUT THE PROJECT LIMITS, INCLUDING REASONABLE INGRESS AND EGRESS FOR BUSINESSES. SPECIAL ATTENTION SHALL BE PAID TO FIRE HYDRANTS.

M) THE CONTRACTOR SHALL PATROL THE WORK SITE AT THE BEGINNING AND END OF EACH WORK DAY (AT A MINIMUM) TO ENSURE THAT ALL TRAFFIC CONTROL DEVICES ARE IN PLACE AND FUNCTIONING PROPERLY. CONTRACTOR SHALL ENSURE THAT ALL TRAFFIC CONTROL DEVICES ARE IN PLACE AND FUNCTIONING AT ALL TIMES DURING PERIODS OF CONSTRUCTION INACTIVITY.

N) DURING PERIODS OF INACTIVITY OR AT NIGHT, EQUIPMENT SHALL NOT BE PARKED IN SUCH A MANNER AS TO BLOCK SIDEWALKS, TRAFFIC CONTROL DEVICES, OR THE MOTORISTS' VIEW OF TRAFFIC. EQUIPMENT SHALL BE AT LEAST 10 FEET AWAY FROM THE TRAVEL LANE.

O) THE CITY ENGINEER OR DIRECTOR OF THE CONCORD TRANSPORTATION DEPARTMENT OR THEIR APPOINTED REPRESENTATIVES ARE AUTHORIZED TO STOP ANY WORK WITHIN PUBLIC RIGHT OF WAY THAT DOES NOT FOLLOW THIS TRAFFIC CONTROL PLAN OR THE M.U.T.C.D. UNTIL SUCH REQUIREMENTS ARE MET.

P) THE CONTRACTOR SHALL FOLLOW THE PHASING AS DESCRIBED HEREIN. THE CONTRACTOR SHALL COMPLETE THE REQUIREMENTS OF EACH CONSTRUCTION PHASE IN SEQUENCE. WHEN A CONSTRUCTION PHASE IS DIVIDED INTO STEPS, THE CONTRACTOR SHALL COMPLETE THE REQUIREMENTS OF EACH STEP IN SEQUENCE. (EXAMPLE: THE REQUIREMENTS OF PHASE I SHALL BE COMPLETED BEFORE PROCEEDING TO PHASE II; THE REQUIREMENTS OF STEP 1 OF PHASE I SHALL BE COMPLETED BEFORE PROCEEDING TO STEP 2 OF PHASE I). ALL WORK DESCRIBED IN THE PROJECT PHASING SHALL BE PERFORMED BY THE CONTRACTOR, EXCEPT WHERE IT IS SPECIFIED FOR CERTAIN WORK TO BE PERFORMED BY OTHERS.

Q) SEE SHEET 00C-08 FOR SIGN PLACEMENT.

PROJECT NOTES

1. THE PROJECT NOTES ARE NOT INTENDED TO BE USED AS GENERAL NOTES FOR THE PROJECT. THEY ARE TO BE USED AT SPECIFIC LOCATIONS AS REQUIRED BY THE DETAILS OF THE TRAFFIC CONTROL PLANS.

2. TRAFFIC CONTROL PLANS (TCP) FOR THIS PROJECT CONSIST OF SEVERAL TYPICAL DRAWINGS AND STANDARDS SHOWING TRAFFIC CONTROL DEVICES TO BE USED WHERE VARIOUS TYPES OF CONSTRUCTION ACTIVITIES ARE OCCURRING ON THE PROJECT. THESE DRAWINGS ARE FOR TYPICAL SITUATIONS AND SHOULD BE ADAPTED TO THE ACTUAL FIELD CONDITIONS WHICH EXIST. DUE TO THE UNFORESEEN FIELD SITUATIONS, IT MAY BE IMPOSSIBLE TO ADAPT THE PRESCRIBED TYPICAL DRAWING OR STANDARD EXACTLY AS SHOWN TO THE ACTUAL FIELD SITUATIONS. THE CONTRACTOR, AT THE DIRECTION OF THE ENGINEER, SHALL MOVE, SUPPLEMENT, CHANGE, AND/OR REMOVE THE TRAFFIC CONTROL DEVICES ASSOCIATED WITH THESE TYPICAL DRAWINGS AND/OR STANDARD DRAWINGS TO ENSURE THAT THE MOTORIST CAN PASS THROUGH THE CONSTRUCTION AREA IN A SAFE AND EFFICIENT MANNER.

3. TRAFFIC CONTROL DEVICES SHALL BE LOCATED NO CLOSER THAN 5 FT. TO A TRENCH AT EXISTING GRADE, MEASURED FROM THE SIDE FACING TRAFFIC.

4. MAXIMUM SPACING BETWEEN CHANNELIZING DEVICES SHALL BE 20 FT. IN TANGENT AREAS, 20 FT. IN TAPERS, AND 10FT. IN RADII. UNLESS OTHERWISE INDICATED ON THE PLANS.

5. USE TYPE III BARRICADES WITH SIGN R11-2 ATTACHED. BARRICADES SHALL BE OF SUFFICIENT LENGTH TO CLOSE ROADWAY.

5. THE CONTRACTOR SHALL MAINTAIN A SMOOTH TRANSITION FROM EXISTING PAVEMENT TO PROPOSED PAVING OPERATION.

STANDARDS

THE FOLLOWING ROADWAY DESIGN STANDARDS THAT APPEAR IN "ROADWAY DESIGN STANDARDS" ROADWAY DESIGN UNIT, N.C. DEPARTMENT OF TRANSPORTATION, CHARLOTTE, N.C., DATED 2012 AND THE LATEST REVISION THERETO ARE APPLICABLE TO THIS PROJECT AND BY REFERENCE HEREBY ARE CONSIDERED A PART OF THESE PLANS.

NCDOT STANDARD DRAWING TO BE USED:

STD. NO.:	TITLE
1101.01	WORK ZONE ADVANCE WARNING SIGNS
1110.01	STATIONARY WORK ZONE SIGNS
1145.01	BARRICADES

CONSTRUCTION PHASING

1. INSTALL EROSION AND SEDIMENT CONTROL MEASURES PRIOR TO CLEARING AND GRUBBING AND UTILITY RELOCATIONS. CLEARING MAY BE PERFORMED FOR THE ENTIRE SITE AT THE ONSET OF THE PROJECT AND BETWEEN THE DATES OF AUGUST 16 TO MAY 15. UTILITY RELOCATIONS BY CONTRACTOR MAY BE PERFORMED AT ALL CULVERT LOCATIONS PRIOR CULVERT REPLACEMENT AS LONG AS THEY DO NOT IMPACT TRAFFIC BY REQUIRING LANE OR ROAD CLOSURES. UTILITY RELOCATIONS BY THE CONTRACTOR THAT REQUIRE LANE OR ROAD CLOSURES SHALL BE PERFORMED AS PART OF THE CULVERT REPLACEMENT STEP. ALL INSTALLED EROSION CONTROL MEASURES SHALL BE MAINTAINED PROPERLY EVEN IN AREAS WHERE CLEARING AND GRUBBING AND UTILITY RELOCATIONS HAVE BEEN COMMENCED PRIOR TO CULVERT REPLACEMENT.

2. INSTALL TRAFFIC CONTROL AND PUMP AROUND MEASURES AT CHADBOURNE DRIVE AND CLOSE ROAD FOR CULVERT REPLACEMENT. PERFORM REMAINING UTILITY RELOCATIONS BY CONTRACTOR, EXCAVATE AND REMOVE CULVERT, PREPARE CULVERT AND ENDWALL SUBGRADE, INSTALL FOUNDATIONS FOR CULVERT AND ENDWALL, INSTALL CULVERTS AND ENDWALLS, BACKFILL CULVERT AND INSTALL ROADWAY SURFACE AND OTHER FEATURES, PERFORM CHANNEL RESTORATION AND GRADING, AND STABILIZE DISTURBED LAND. ESTABLISH SAFE VEHICLE OPERATING CONDITIONS, REMOVE TRAFFIC CONTROL AND OPEN ROADWAY PRIOR TO NEXT CULVERT REPLACEMENT.

3. PERFORM STEP 2 AT CULVERT LOCATIONS IN THE FOLLOWING ORDER: CHELWOOD DRIVE, CHANNING CIRCLE, AND HANOVER DRIVE (IF CONTRACTED).

4. UPON ENGINEER APPROVED STABILIZATION OF THE DISTURBED LAND REMOVE AND PROPERLY DISPOSE OF EROSION AND SEDIMENT CONTROL MEASURES.

NOTE: CONTRACTOR HAS THE OPTION TO REPLACE THE CULVERT AT CHADBOURNE DRIVE CONCURRENTLY WITH CHANNING CIRCLE AND MAY REPLACE THE CULVERT AT CHELWOOD DRIVE CONCURRENTLY WITH HANOVER DRIVE (IF CONTRACTED). THE WORK MAY BE INTERNALLY PHASED AMONGST THE PAIR TO SEQUENTIALLY UTILIZE EQUIPMENT AND LABOR HOWEVER THE CULVERT SHALL BE CONSTRUCTED DOWNSTREAM TO UPSTREAM. AT NO TIME SHALL THE CONTRACTOR PARTIALLY OR FULLY CLOSE THRU TRAFFIC AT THE SAME TIME FOR CHADBORNE DRIVE / CHELWOOD DRIVE AND FOR CHANNING CIRCLE / HANOVER DRIVE AS THIS WILL PREVENT RESIDENTIAL ACCESS.

LEGEND

TYPE III BARRICADE.....

ARROW PANEL.....

STATIONARY CONSTRUCTION SIGNS.....

WORK AREA.....

ISSUE	DATE	DESCRIPTION
1	9/6/16	ISSUED FOR CONSTRUCTION

PROJECT MANAGER	
PROJECT MANAGER	PB
CHECKED BY	RG
DRAWN BY	TM
PROJECT NUMBER	219915

NORTH CAROLINA PROFESSIONAL SEAL 30971 ENGINEER PATRICK BLANKENSHIP 9/29/16

CITY OF CONCORD STORMWATER SERVICES
ALFRED M. BROWN OPERATIONS CENTER
850 Warren C. Coleman Blvd.
Concord, North Carolina 28026-0308

ZEMOSA ACRES CULVERT REPLACEMENT
TRAFFIC CONTROL OVERVIEW AND NOTES

0 1" 2"

FILENAME 00C-07.dwg
SCALE 1" = 200'

SHEET **00C-07**

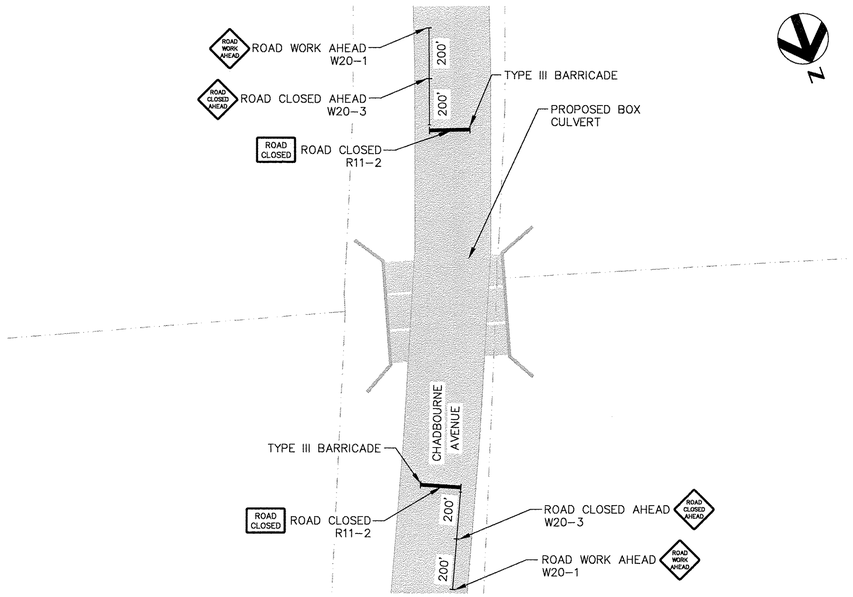

CHADBOURNE AVENUE

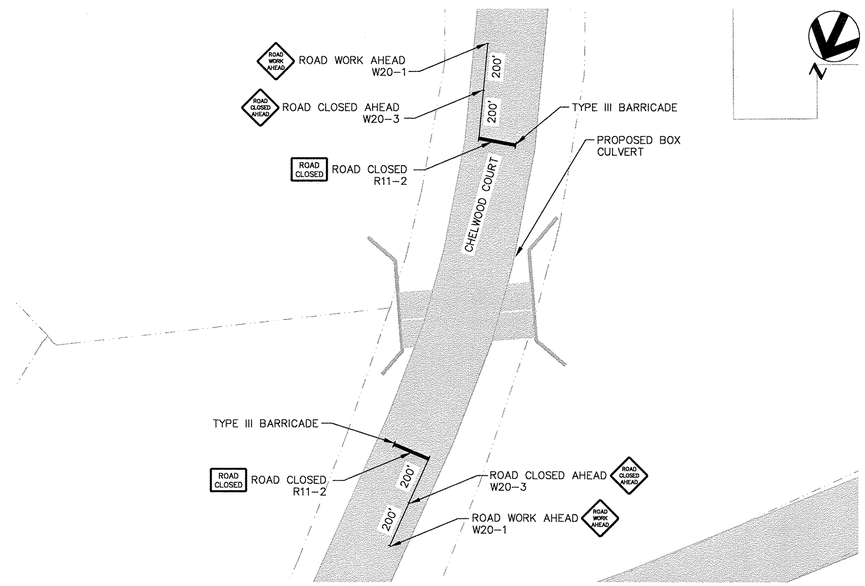

CHELWOOD DRIVE

NOTES:

1. TYPE III BARRICADES SHALL BE PLACED ACROSS ENTIRE WIDTH OF ROADWAY. BARRICADES SHALL BE LOCATED JUST BEYOND NEAREST RESIDENTIAL DRIVEWAY, MAILBOX OR INTERSECTION TO WORK ZONE.
2. CONTRACTOR SHALL NOT BLOCK RESIDENTIAL DRIVEWAYS OR USE THEM FOR VEHICLE TURN AROUND. DRIVEWAYS SHOULD BE MARKED ON EITHER SIDE BY ORANGE CONES.

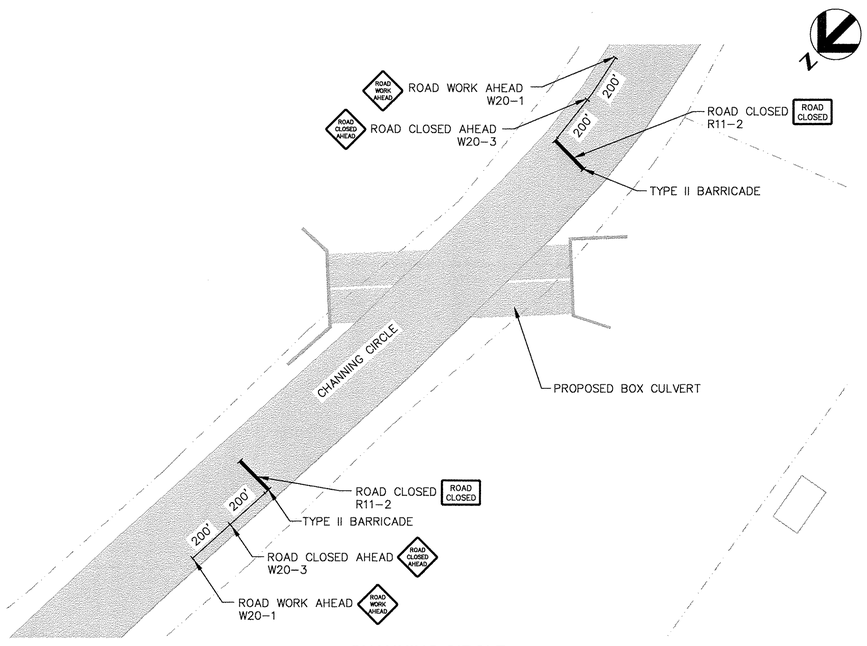

CHANNING CIRCLE

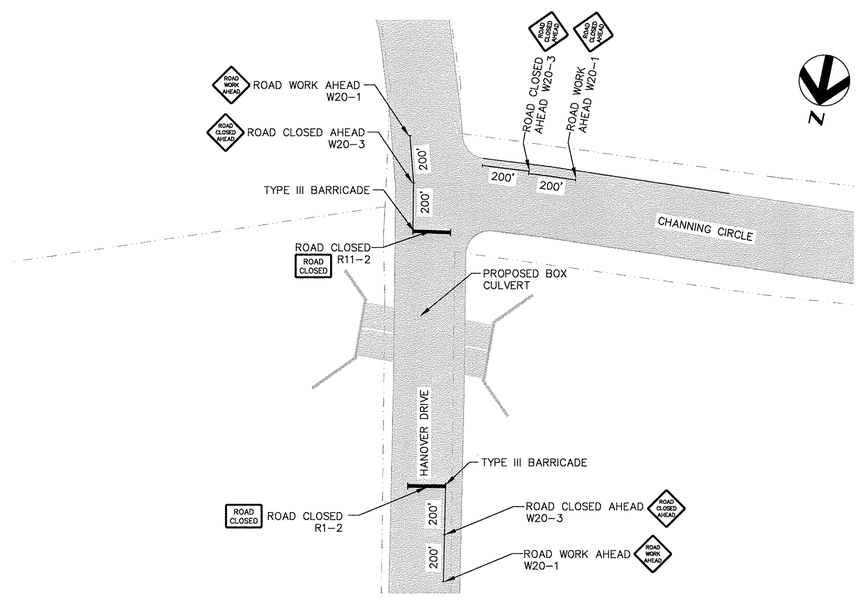

HANOVER DRIVE

Concord NORTH CAROLINA High Performance Living

HDR

ISSUE	DATE	DESCRIPTION
1	9/6/16	ISSUED FOR CONSTRUCTION

PROJECT MANAGER	
PROJECT MANAGER	PB
CHECKED BY	RG
DRAWN BY	TM
PROJECT NUMBER	219915

NORTH CAROLINA PROFESSIONAL SEAL 30971 ENGINEER PATRICK BLANKENSHIP

9/28/16

CITY OF CONCORD STORMWATER SERVICES
ALFRED M. BROWN OPERATIONS CENTER
850 Warren C. Coleman Blvd.
Concord, North Carolina 28026-0308

ZEMOSA ACRES CULVERT REPLACEMENT
TRAFFIC CONTROL PLAN

0 1" 2"

FILENAME	00C-08.dwg
SCALE	AS SHOWN

SHEET 00C-08

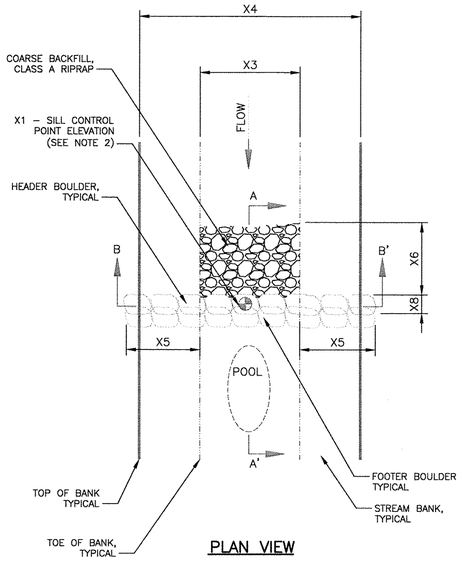

PLAN VIEW

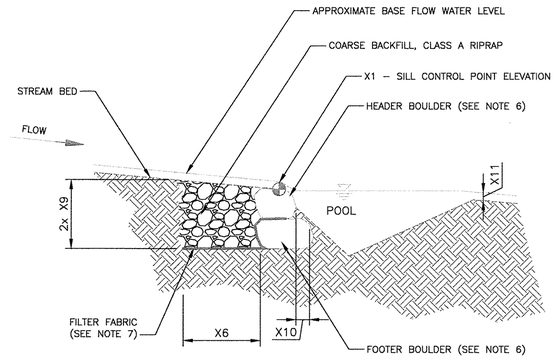

PROFILE A–A'

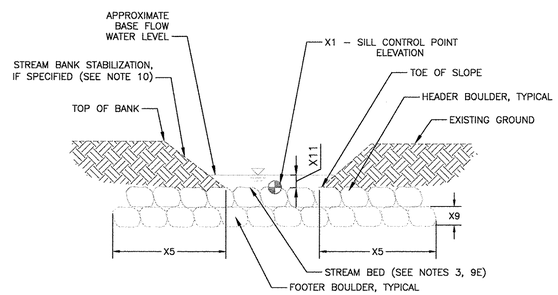

CROSS SECTION B–B'

DIMENSIONS (VALUES TO BE PROVIDED BY DESIGNER)			
VARIABLE	VALUES	TYPICAL UNIT	DESCRIPTION
X1	See Plan	FT. (NAVD)	SEE CONTROL POINT ELEVATION
X3	8, 13	FT.	STREAM BED WIDTH
X4	13	FT.	OVERALL WIDTH
X5	5' Min.	FT.	LENGTH OF SILL EMBEDDED IN SOIL
X6	1.5	FT.	LENGTH OF COARSE BACKFILL
X7	30	IN.	BOULDER WIDTH
X8	30	IN.	BOULDER LENGTH
X9	24	IN.	BOULDER THICKNESS (DEPTH)
X10	0.5	FT.	BOULDER PLACEMENT OFFSET
X11	0.3	FT.	APPROXIMATE BASE FLOW DEPTH

NOTES:

1. A BOULDER SILL MAY BE USED ALONE OR IN COMBINATION WITH A CONSTRUCTED RIFFLE.
2. AN ELEVATION CONTROL POINT SHALL BE DESIGNATED AT THE CENTER OF THE SILL TO ESTABLISH PART OF THE PROFILE. CONTROL POINT TO SCALE SHALL BE REQUIRED TO ESTABLISH ACCURATE INSTALLATION WITHIN THE TOLERANCE SPECIFIED BY THE DESIGNER.
3. NO PART OF THE SILL SHALL BE PLACED ABOVE THE ELEVATION OF THE STREAM BED.
4. IF PLANS DESIGNATE THE USE OF MULTIPLE BOULDER SILLS A TABLE OF ALL STATION LOCATIONS AND CONTROL POINT ELEVATIONS SHALL BE PROVIDED IN THIS DETAIL OR PROVIDED ELSEWHERE IN THE PLANS AND REFERENCED HEREIN.
5. TYPICAL RIFFLE AND POOL CROSS SECTIONS SHALL BE PROVIDED ELSEWHERE IN THE PLANS TO ESTABLISH THE DIMENSIONS OF THE CHANNEL GRADING INTO WHICH THE BOULDER SILLS ARE TO BE INSTALLED.
6. THE SILL SHALL BE CONSTRUCTED WITH FLAT–SIDED BOULDERS OF A SIZE (LENGTH, WIDTH, AND DEPTH) AS SPECIFIED BY THE DESIGNER. THE LENGTH OF THE SILL EMBEDDED INTO EACH BANK SHALL BE A MINIMUM OF 5 FEET.
7. FILTER FABRIC OF A TYPE AND SIZE SPECIFIED BY THE DESIGNER SHALL BE USED TO SEAL THE GAPS BETWEEN THE BOULDERS AND THE STREAM BED, UNDER THE COARSE BACKFILL MATERIAL. THE FABRIC SHALL BE PLACED ALONG THE ENTIRE LENGTH OF THE SILL. THE FABRIC SHALL BE SECURED BY THE WEIGHT OF THE HEADER BOULDER PLACED ON TOP OF THE FOOTER BOULDER WITH THE FABRIC END PLACED BETWEEN THEM. THERE SHALL BE NO FILTER FABRIC VISIBLE IN THE FINISHED WORK; EDGES SHALL BE FOLDED, TUCKED, OR TRIMMED AS NEEDED.
8. COARSE BACKFILL OF THE BOULDERS SHALL BE OF A TYPE, SIZE, AND GRADATION AS SPECIFIED BY THE DESIGNER. COARSE BACKFILL SHALL BE PLACED TO A THICKNESS EQUAL TO THE DEPTH OF THE HEADER AND ANY FOOTER BOULDERS AND SHALL EXTEND UPSTREAM FROM THE SILL A DISTANCE SPECIFIED BY THE DESIGNER.
9. THE BOULDER SILL IS GENERALLY CONSTRUCTED AS FOLLOWS:
   - A. OVER–EXCAVATE STREAM BED TO A DEPTH EQUAL TO THE TOTAL THICKNESS OF THE HEADER AND FOOTER BOULDERS.
   - B. PLACE FOOTER BOULDERS. A LAYER OF BEDDING MATERIAL UNDER THE FOOTER BOULDERS MAY BE SPECIFIED BY THE DESIGNER. THERE SHALL BE NO GAPS BETWEEN BOULDERS.
   - C. INSTALL FILTER FABRIC.
   - D. PLACE COURSE BACKFILL BEHIND THE FOOTER BOULDERS.
   - E. INSTALL HEADER BOULDERS ON TOP OF AND SET SLIGHTLY BACK FROM THE FOOTER BOULDERS (SUCH THAT PART OF THE HEADER BOULDER IS RESTING ON THE COARSE BACKFILL). HEADER BOULDERS SHALL SPAN THE SEAMS OF THE FOOTER BOULDERS. THERE SHALL NOT BE A SEAM IN THE CENTER OF THE STREAM BED (AT THE THALWEG, THE LOWEST POINT OF THE CHANNEL). THERE SHALL BE NO GAPS BETWEEN BOULDERS.
   - F. PLACE COARSE BACKFILL BEHIND HEADER BOULDERS ENSURING THAT ANY VOIDS BETWEEN THE BOULDERS ARE FILLED.
10. STREAM BANK STABILIZATION, IF SPECIFIED, SHALL BE ADDED TO THIS DETAIL OR DETAILED SEPARATELY AND REFERENCED HEREIN.

ROCK SILL

NOT TO SCALE

1 / –

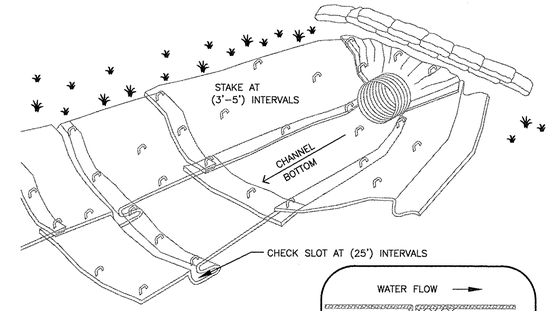

ISOMETRIC VIEW

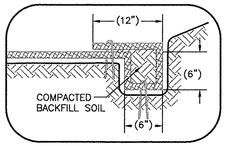

ANCHOR TRENCH

N.T.S.

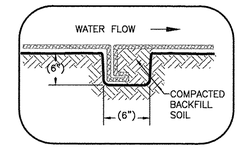

INTERMITTENT CHECK SLOT METHOD 2

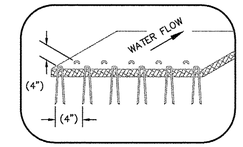

INTERMITTENT CHECK SLOT METHOD 1

N.T.S.

NOTES:

1. CHECK SLOTS TO BE CONSTRUCTED PER MANUFACTURERS SPECIFICATIONS.
2. STAKING OR STAPLING LAYOUT PER MANUFACTURERS SPECIFICATIONS.

EROSION CONTROL BLANKETS CHANNEL INSTALLATION

NOT TO SCALE

2 / –

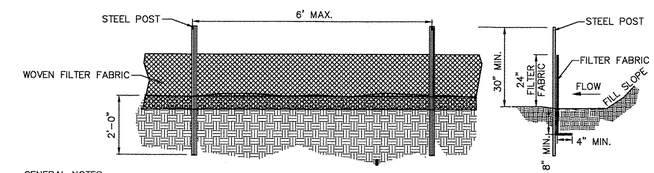

GENERAL NOTES:

1. WOVEN FILTER FABRIC BE USED WHERE SILT FENCE IS TO REMAIN FOR A PERIOD OF MORE THAN 30 DAYS.
2. STEEL POSTS SHALL BE 5'–0" IN HEIGHT AND BE OF THE SELF–FASTENER ANGLE STEEL TYPE.
3. TURN SILT FENCE UP SLOPE AT ENDS.
4. ORANGE SAFETY FENCE IS REQUIRED AT BACK OF SILT FENCE WHEN GRADING IS ADJACENT TO SWM BUFFERS, STREAMS OR WETLANDS (REFER TO SWM BUFFER GUIDELINES). THE COLOR ORANGE IS RESERVED FOR VISUAL IDENTIFICATION OF ENVIRONMENTALLY SENSITIVE AREAS.
5. DRAINAGE AREA CAN NOT BE GREATER THAN 1/4 ACRE PER 100 FT OF FENCE.
6. SLOPE LENGTHS CAN NOT EXCEED CRITERIA SHOWN IN TABLE 6.62A NORTH CAROLINA EROSION AND SEDIMENT CONTROL PLANNING AND DESIGN MANUAL.
7. DO NOT INSTALL SEDIMENT FENCE ACROSS STREAMS, DITCHES, WATERWAYS OR OTHER AREAS OF CONCENTRATED FLOW.

MAINTENANCE NOTES:

1. FILTER BARRIERS SHALL BE INSPECTED BY THE FINANCIALLY RESPONSIBLE PARTY OR HIS AGENT IMMEDIATELY AFTER EACH RAINFALL AND AT LEAST DAILY DURING PROLONGED RAINFALL. ANY REPAIRS NEEDED SHALL BE MADE IMMEDIATELY.
2. SHOULD THE FABRIC DECOMPOSE OR BECOME INEFFECTIVE PRIOR TO THE END OF THE EXPECTED USABLE LIFE AND THE BARRIER STILL IS NECESSARY, THE FABRIC SHALL BE REPLACED PROMPTLY.
3. SEDIMENT DEPOSITS SHOULD BE REMOVED WHEN DEPOSITS REACH APPROX. HALF THE HEIGHT OF THE BARRIER. ANY SEDIMENT DEPOSITS REMAINING IN PLACE AFTER THE SILT FENCE IS REMOVED SHALL BE DRESSED TO CONFORM TO THE EXISTING GRADE, PREPARED AND SEEDED.

SILT FENCE DETAIL

NOT TO SCALE

3 / –

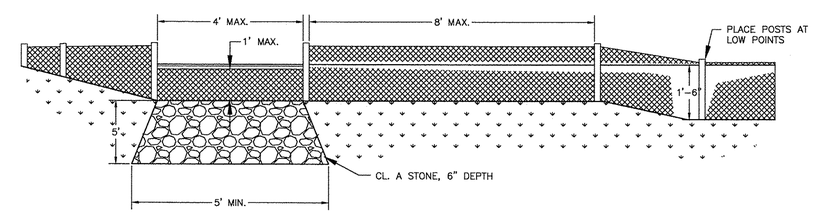

STABILIZED OUTLET FOR SEDIMENT FENCE

NOT TO SCALE

4 / –

Concord NORTH CAROLINA High Performance Living

HDR

ISSUE	DATE	DESCRIPTION
1	9/6/16	ISSUED FOR CONSTRUCTION

PROJECT MANAGER	
PROJECT MANAGER	PB
CHECKED BY	RG
DRAWN BY	TM
PROJECT NUMBER	219915

NORTH CAROLINA PROFESSIONAL SEAL 30971 ENGINEER PATRICK BYGANPOSKI

9/22/16

CITY OF CONCORD STORMWATER SERVICES
ALFRED M. BROWN OPERATIONS CENTER
850 Warren C. Coleman Blvd.
Concord, North Carolina 28026-0308

ZEMOSA ACRES CULVERT REPLACEMENT
CIVIL DETAILS

0 1" 2"

FILENAME 00C–09.dwg
SCALE AS NOTED

SHEET **00C-09**

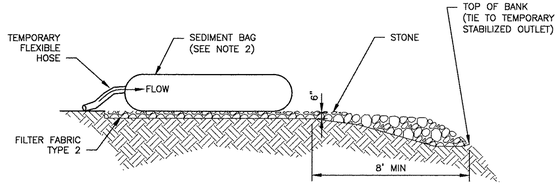

SEDIMENT REMOVAL DEVICE

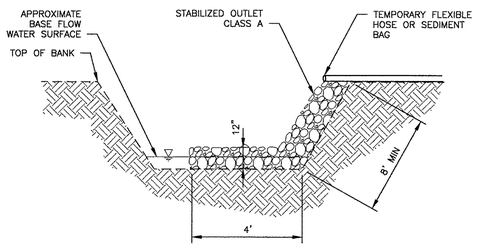

TEMPORARY STABILIZED OUTLET SECTION

NOTES:

1. SEDIMENT FILTER BAG FABRIC SHALL BE GEOTEXTILE MANUFACTURED FROM WOVEN POLYPROPYLENE OR POLYMER MATERIAL. SEDIMENT FILTER BAG FABRIC MAY BE MADE FROM RECYCLED POLYMER MATERIALS. POLYMER MATERIALS SHALL NOT CONTAIN BIODEGRADABLE FILLER MATERIALS AND SHALL CONFORM TO THE REQUIREMENTS IN ASTM DESIGNATION: E 204

2. SEDIMENT FILTER BAG FABRIC SHALL CONFORM TO THE FOLLOWING REQUIREMENTS:

Specification	Requirements
Grab tensile strength (one inch grip), pounds, minimum in each direction ASTM Designation: D 4632 or appropriate test method for specific polymer	255
Elongation, percent, minimum in each direction ASTM Designation: D 4632 or appropriate test method for specific polymer	15
Permittivity, 1/sec., minimum ASTM Designation: D 4491	1.5
Flow rate, gallons per minute per square foot, minimum ASTM Designation: D 4491	200
Ultraviolet stability, percent tensile strength retained after 500 hours, minimum ASTM Designation: D 4355 (xenon–arc lamp and water spray weathering method)	80

3. THE SEDIMENT FILTER BAG SHALL BE 10'X12'X1.5' (MIN) AND SHALL BE COMPLETE WITH LIFTING LOOPS AND DUMP STRAPS ATTACHED AT THE BOTTOM TO FACILITATE EMPTYING OF THE SEDIMENT FILTER BAG.

4. LIFTING STRAPS, SHOULD BE PLACED UNDER THE DEWATERING SEDIMENT FILTER BAG TO FACILITATE REMOVAL AFTER USE.

5. PLACE THE DEWATERING SEDIMENT FILTER BAG ON A LEVEL STABILIZED AREA OVER DENSE VEGETATION/STRAW, OR GRAVEL (IF INCREASED DRAINAGE SURFACE AREA IS NEEDED).

6. INSERT DISCHARGE HOSE FROM PUMP INTO THE DEWATERING SEDIMENT FILTER BAG A MINIMUM OF SIX INCHES (6") AND TIGHTLY SECURE WITH ATTACHED STRAP TO PREVENT WATER FROM FLOWING OUT OF THE UNIT WITHOUT BEING FILTERED.

7. REPLACE THE UNIT WHEN ONE HALF (1/2) FULL OF SEDIMENT OR WHEN SEDIMENT HAS REDUCED THE FLOW RATE OF THE PUMP DISCHARGE TO AN IMPRACTICAL RATE.

8. REMOVE THE UNIT AND SEDIMENT FROM ENVIRONMENTALLY SENSITIVE AREA AND WATERWAYS. AT THE APPROVED DISPOSAL SITE OPEN OR SLIT THE UNIT, REMOVE SEDIMENT AND GRADE SMOOTHLY INTO EXISTING TOPOGRAPHY. DISPOSE OF THE DEWATERING SEDIMENT FILTER BAG, AT AN APPROPRIATE RECYCLING OR SOLID WASTE FACILITY.

DEWATERING SEDIMENT FILTER BAG (1/–)

NOT TO SCALE

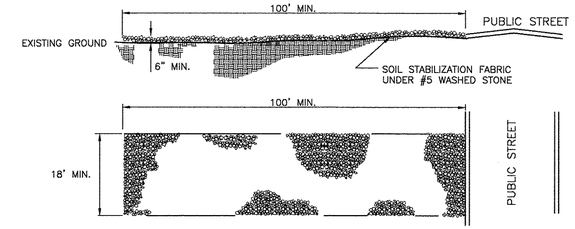

NOTES:

1. A STABILIZED ENTRANCE PAD OF #5 WASHED STONE AND RAILROAD BALLAST SHALL BE LOCATED WHERE TRAFFIC WILL ENTER OR LEAVE THE CONSTRUCTION SITE ONTO A PUBLIC STREET.
2. FILTER FABRIC OR COMPACTED CRUSHER RUN STONE SHALL BE USED AS A BASE FOR THE CONSTRUCTION ENTRANCE.
3. THE ENTRANCE SHALL BE MAINTAINED IN A CONDITION WHICH WILL PREVENT TRACKING OR FLOWING OF SEDIMENT ONTO PUBLIC STREETS OR EXISTING PAVEMENT. THIS MAY REQUIRE PERIODIC TOP DRESSING WITH ADDITIONAL STONE AS CONDITIONS WARRANT AND REPAIR OR CLEANOUT OF ANY MEASURES USED TO TRAP SEDIMENT.
4. ANY SEDIMENT SPILLED, DROPPED, WASHED, OR TRACKED ONTO PUBLIC STREETS MUST BE REMOVED IMMEDIATELY. ANY AGGREGATE TRACKED INTO THE ROADWAY MUST BE SWEPT BACK ONSITE ON A NIGHTLY BASIS.
5. WHEN APPROPRIATE, WHEELS MUST BE CLEANED TO REMOVE SEDIMENT PRIOR TO ENTERING A PUBLIC STREET. WHEN WASHING IS REQUIRED, IT SHALL BE DONE IN AN AREA STABILIZED WITH CRUSHED STONE WHICH DRAINS INTO AN APPROVED SEDIMENT BASIN.

TEMPORARY GRAVEL CONSTRUCTION ENTRANCE/EXIT DETAIL (3/–)

NOT TO SCALE

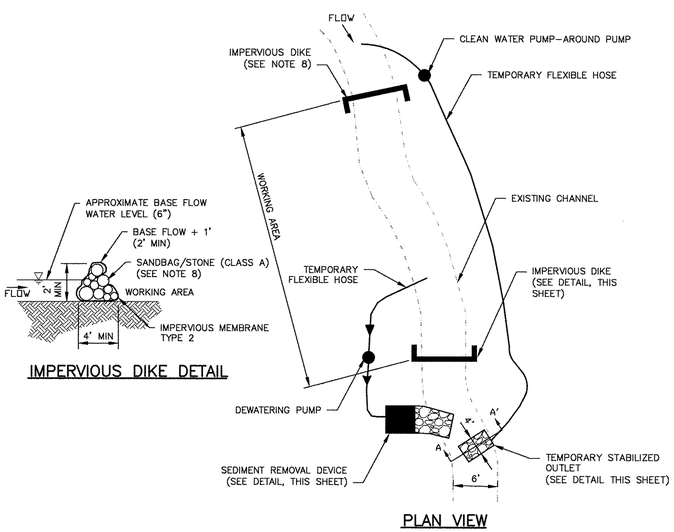

IMPERVIOUS DIKE DETAIL

PLAN VIEW

GENERAL NOTES:

1. ALL CHANNEL WORK INVOLVING EXCAVATION SHALL BE PERFORMED IN DRY CONDITIONS OR IN CHANNEL SECTIONS ISOLATED BY IMPERVIOUS DIKES AND KEPT DE–WATERED.
2. THE CONTRACTOR SHALL NOT DISTURB MORE AREA THAN CAN BE STABILIZED THE SAME WORKING DAY.
3. PUMP–AROUND PUMP AND HOSE SHALL ADEQUATELY CONVEY BASEFLOW. DE–WATERING PUMP SHALL ADEQUATELY DE–WATER THE WORKING AREA AT THE DOWNSTREAM IMPERVIOUS DIKE.
4. GRAVITY–BASED GEOTEXTILE BAG FILTERS SHALL BE USED TO COLLECT SILT AND SEDIMENT FROM WORK AREA DEWATERING. THE DESIGNER MAY SPECIFY A SEDIMENT BASIN OR OTHER SEDIMENT CONTROL MEASURE IN LIEU OF A SEDIMENT BAG IF SITE CONDITIONS ARE FAVORABLE (I.E. – TREES WILL NOT BE IMPACTED FOR BASIN EXCAVATION, ETC.).
5. EFFLUENT FROM CLEAN WATER PUMP AROUND MAY BE DISCHARGED DIRECTLY INTO STABILIZED OUTLET (NO SEDIMENT REMOVAL DEVICE REQUIRED).
6. A STABILIZED OUTLET SHALL BE USED TO CONTROL THE EFFLUENT FROM ALL PUMPING OPERATIONS. THE DESIGNER SHALL SPECIFY ALL MATERIALS AND DIMENSIONS ASSOCIATED WITH STABILIZED OUTLETS.
7. FILTER FABRIC AS SPECIFIED BY THE DESIGNER SHALL BE USED UNDERNEATH ALL STONE/RIP RAP PLACED FOR SEDIMENT BAGS, STABILIZED OUTLETS, SPLASH PADS.
8. IMPERVIOUS DIKES SHALL BE CONSTRUCTED TO ISOLATE THE IN–STREAM WORKING AREA. AN IMPERVIOUS FABRIC MEMBRANE AND SAND BAGS OR STONE, SHALL BE USED TO CREATE THE DIKES.
9. THE WORK SEQUENCE IN PUMP–AROUND OPERATIONS PROCEEDS TYPICALLY AS FOLLOWS:
   - A. INSTALL SEDIMENT REMOVAL DEVICE AND TEMPORARY STABILIZED OUTLETS AT THE DOWNSTREAM END OF WORKING AREA.
   - B. INSTALL PUMP–AROUND PUMP AND FLEXIBLE HOSE.
   - C. INSTALL UPSTREAM IMPERVIOUS DIKE AND BEGIN PUMPING (CLEAN WATER) DOWNSTREAM TO STABILIZED OUTLET.
   - D. INSTALL DOWNSTREAM IMPERVIOUS DIKE AND DE–WATERING PUMP.
   - E. PERFORM CHANNEL WORK IN ACCORDANCE WITH THE PLANS IN THE WORKING AREA.
   - F. DE–WATER THE WORKING AREA (AS NEEDED) INTO THE SEDIMENT REMOVAL DEVICE AND TEMPORARY STABILIZED OUTLET.
   - G. UPON COMPLETION OF WORK, REMOVE ANY SEDIMENT ACCUMULATION BEHIND IMPERVIOUS DIKES.
   - H. REMOVE DOWNSTREAM AND THEN UPSTREAM DIKES AND ALL PUMPS AND HOSE.
   - I. SEED AND MULCH ALL DISTURBED AREAS PER THE PLANTING PLAN.

PUMP AROUND DETAIL (2/–)

NOT TO SCALE

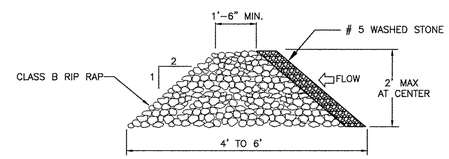

CROSS SECTION

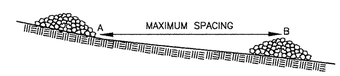

A AND B ARE AT EQUAL ELEVATIONS

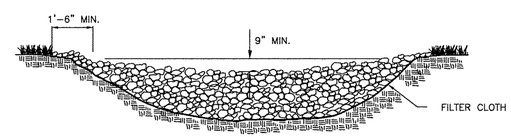

PLAN

GENERAL NOTES:

1. RIPRAP SIZE TO BE DESIGNED BY ENGINEER.
2. CHECK DAMS MAY BE USED IN SLOPING DITCHES OR CHANNELS TO SLOW VELOCITY OR TO CREATE SEDIMENT TRAPS.
3. ENSURE THAT MAXIMUM SPACING BETWEEN DAMS PLACES THE TOE OF THE UPSTREAM DAM AT THE SAME ELEVATION AS THE DOWNSTREAM DAM (SEE DIAGRAM BELOW).

TEMPORARY ROCK CHECK DAM DETAIL (4/–)

NOT TO SCALE

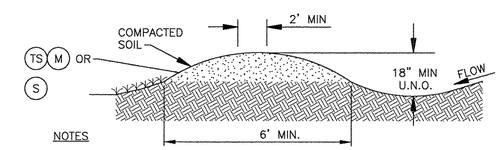

NOTES

1. CONSTRUCT TEMPORARY DIVERSION CHANNELS AT A 1.0% SLOPE TOWARD OUTLET, UNLESS NOTED OTHERWISE.
2. SIDE SLOPES SHALL NOT EXCEED A 5:1 (H:V) SLOPE IN AREAS WHERE VEHICLES MUST CROSS, 2:1 SLOPE (MAX.) IN ALL OTHER AREAS.

TEMPORARY DIVERSION DITCH DETAIL (5)

NOT TO SCALE

ISSUE	DATE	DESCRIPTION
1	9/6/16	ISSUED FOR CONSTRUCTION

PROJECT MANAGER	
PROJECT MANAGER	PB
CHECKED BY	RG
DRAWN BY	TM
PROJECT NUMBER	219915

NORTH CAROLINA PROFESSIONAL SEAL 30971 ENGINEER PATRICK BLANKENSHIP
9/29/16

CITY OF CONCORD STORMWATER SERVICES
ALFRED M. BROWN OPERATIONS CENTER
850 Warren C. Coleman Blvd.
Concord, North Carolina 28026-0308

ZEMOSA ACRES CULVERT REPLACEMENT
CIVIL DETAILS

0 1" 2"

FILENAME 00C–10.dwg
SCALE AS NOTED

SHEET **00C-10**

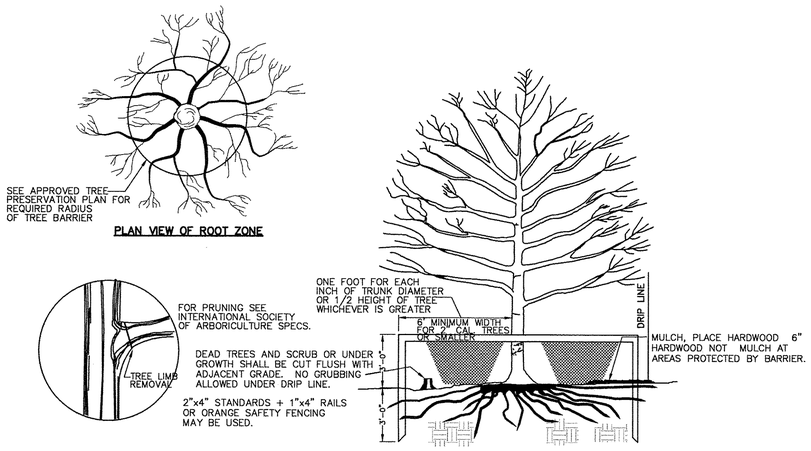

NOTES:

1. REMOVE ALL BARRIERS UPON COMPLETION OF PROJECT.
2. LANDSCAPING PLANS SHALL SHOW THE LOCATIONS OF ALL TREE PROTECTION FENCES.
3. CONTRACTOR SHALL OBTAIN APPROVAL BY THE INSPECTOR PRIOR TO THE GRADING NEAR THE TREE PROTECTION AREAS. MINOR GRADING WITHIN THE PROTECTED AREA MAY BE ALLOWED ON A CASE-BY-CASE BASIS.

TREE PROTECTION DETAIL (1 / –)

NOT TO SCALE

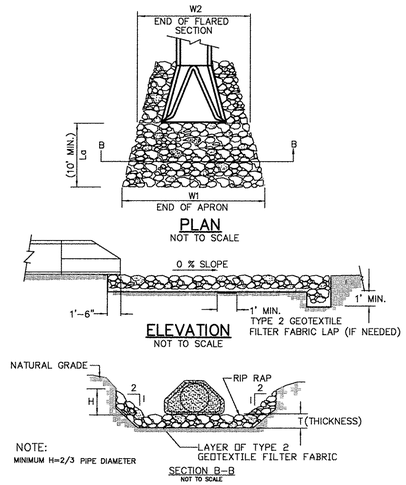

NOTE:
MINIMUM H=2/3 PIPE DIAMETER

NOTES:

1. CLASS OR MEDIAN SIZE OF RIPRAP AND LENGTH, WIDTH AND DEPTH OF APRON TO BE SHOWN ON EROSION CONTROL PLANS.
2. RIPRAP SHOULD EXTEND UP BOTH SIDES OF THE APRON AND AROUND THE END OF THE PIPE OR CULVERT AT THE DISCHARGE OUTLET AT A MAXIMUM SLOPE OF 2:1 AND A HEIGHT NOT LESS THAN TWO THIRDS THE PIPE DIAMETER OR CULVERT HEIGHT.
3. THERE SHALL BE NO OVERFLOW FROM THE END OF THE APRON TO THE SURFACE OF THE RECEIVING CHANNEL. THE AREA TO BE RIPRAPPED SHALL BE UNDERCUT SO THAT THE INVERT OF THE APRON SHALL BE AT THE SAME GRADE (FLUSH) WITH THE SURFACE OF THE RECEIVING CHANNEL. THE APRON SHALL HAVE A CUTOFF OR TOE WALL AT THE DOWNSTREAM END.
4. THE WIDTH OF THE END OF THE APRON SHALL BE EQUAL TO THE BOTTOM WIDTH OF THE RECEIVING CHANNEL. MAXIMUM TAPER TO RECEIVING CHANNEL 5:1
5. ALL SUBGRADE FOR STRUCTURE TO BE COMPACTED TO 95% OR GREATER.
6. THE PLACING OF FILL, EITHER LOOSE OR COMPACTED IN THE RECEIVING CHANNEL SHALL NOT BE ALLOWED.
7. NO BENDS OR CURVES IN THE HORIZONTAL ALIGNMENT OF THE APRON UNLESS OTHERWISE SHOWN.
8. TYPE 2 GEOTEXTILE FILTER FABRIC SHALL BE INSTALLED ON COMPACTED SUBGRADE PRIOR TO PLACEMENT OF RIP RAP AND TRIMMED AFTER RIPRAP PLACEMENT SO THAT NO FABRIC IS VISIBLE.

RIPRAP APRON AT PIPE OUTFALLS (3 / –)

NOT TO SCALE

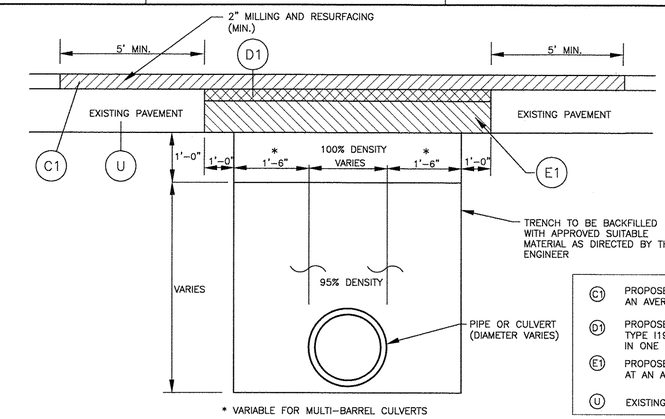

* VARIABLE FOR MULTI-BARREL CULVERTS

PAVEMENT REPAIR (5 / –)

NOT TO SCALE

C1	PROPOSED 2" ASPHALT CONCRETE SURFACE COURSE, TYPE SF9.5A AT AN AVERAGE RATE OF 110 LBS. PER SQ. YD. PER INCH IN TWO LIFTS.
D1	PROPOSED 2.5" ASPHALT CONCRETE INTERMEDIATE COURSE, TYPE I19.0B AT AN AVERAGE RATE OF 285 LBS. PER SQ. YD. IN ONE LIFT.
E1	PROPOSED 6" ASPHALT CONCRETE BASE COARSE, TYPE B25.0B AT AN AVERAGE RATE OF 342 LBS. PER SQ. YD. IN TWO LIFTS.
U	EXISTING PAVEMENT

PAVEMENT SCHEDULE

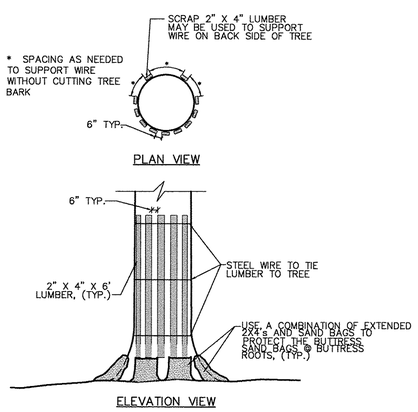

NOTES:

1. THIS TREE BUMPER DETAIL SHALL BE USED WHEN WORKING WITHIN 10' OF AN EXISTING TREE TO BE PROTECTED.
2. ALL TREES SHALL BE SAVED UNLESS NOTED OTHERWISE ON THE PLANS OR DIRECTED BY THE ENGINEER.
3. LUMBER, WIRE AND SANDBAGS MAY BE REUSED FOR OTHER TREES.
4. THE INTENT OF THIS DETAIL IS TO PROTECT EXISTING TREES FROM DAMAGE DURING CONSTRUCTION ESPECIALLY FROM BACKHOE ARM SWING. AN ALTERNATE APPROACH MAY BE USED IF APPROVED IN WRITING BY THE ENGINEER AFTER CONSULTATION WITH THE TOWN ARBORIST OR HIS DULY AUTHORIZED REPRESENTATIVE.

TEMPORARY TREE PROTECTION DETAIL (2 / –)

NOT TO SCALE

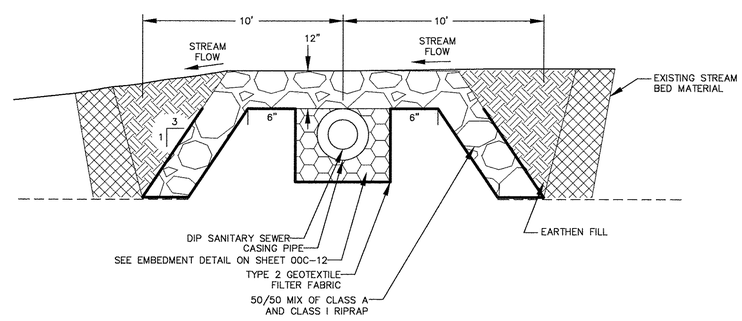

SANITARY SEWER PROTECTION (4 / –)

NOT TO SCALE

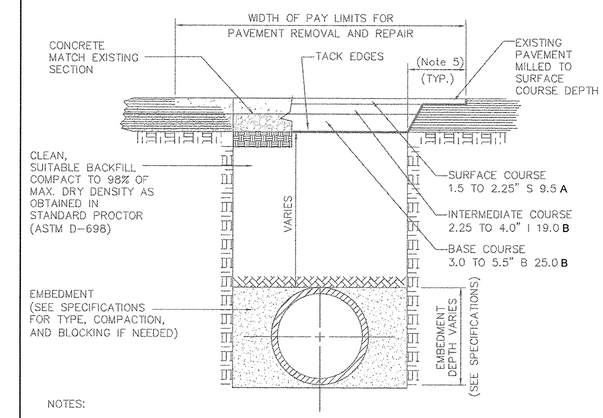

NOTES:

1. NEW PAVEMENT SHALL HAVE SECTION THICKNESS DESIGNED TO NCDOT SUPERPAVE STANDARDS AS PROVIDED BY ENGINEER OR MATCH EXISTING CONSTRUCTION, WHICH EVER IS GREATER OR AS SPECIFIED BY THE CONTRACT DOCUMENTS.
2. TRENCH IS TO BE BACKFILLED IN COMPACTED 6" LAYERS BEFORE PAVEMENT REPAIRS ARE MADE.
3. REFER TO EARTHWORK SPECIFICATIONS FOR EMBEDMENT AND FILL REQUIREMENTS.
4. THIS DETAIL SHOWS ASPHALT PAVEMENT REPLACEMENT. THE WIDTH OF PAY LIMITS SHALL APPLY TO STONE AND CONCRETE PAVEMENT AS WELL.
5. 18" MIN. AROUND PATCHES AND 36" MIN. AT CURB CUTS.

UTILITY CUT REPLACEMENT DETAIL

SCALE: NONE

Concord NORTH CAROLINA — CITY OF CONCORD STANDARD DETAIL — UTILITY CUT REPLACEMENT

No.	Date	By	REVISION

Drawn By:	Checked By:	Approved By:	Date	Sht	of
SVM	MSH		11/01	1	1

UTILITY CUT REPLACEMENT (6 / –)

NOT TO SCALE

Concord NORTH CAROLINA High Performance Living

HDR

ISSUE	DATE	DESCRIPTION
1	9/6/16	ISSUED FOR CONSTRUCTION

PROJECT MANAGER	
PROJECT MANAGER	PB
CHECKED BY	RG
DRAWN BY	TM
PROJECT NUMBER	219915

NORTH CAROLINA PROFESSIONAL SEAL 30971 ENGINEER PATRICK BLANKENSHIP 9/29/16

CITY OF CONCORD STORMWATER SERVICES
ALFRED M. BROWN OPERATIONS CENTER
850 Warren C. Coleman Blvd.
Concord, North Carolina 28026-0308

ZEMOSA ACRES CULVERT REPLACEMENT
CIVIL DETAILS

0 1" 2"

FILENAME 00C-11.dwg
SCALE AS NOTED

SHEET **00C-11**

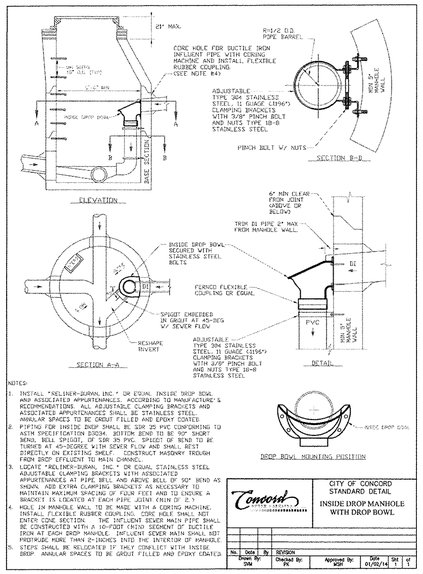

INSIDE DROP MANHOLE WITH DROP BOWL (1)

NOT TO SCALE

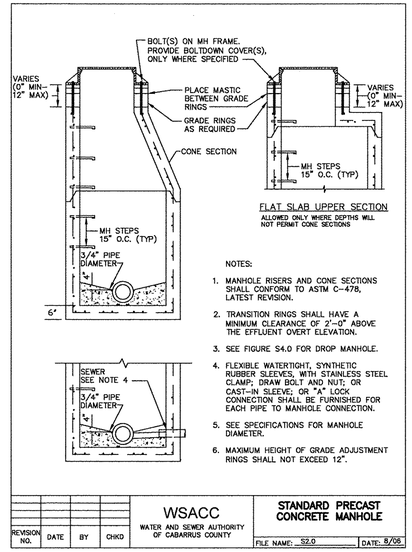

FLAT SLAB MANHOLE DETAIL (2)

NOT TO SCALE

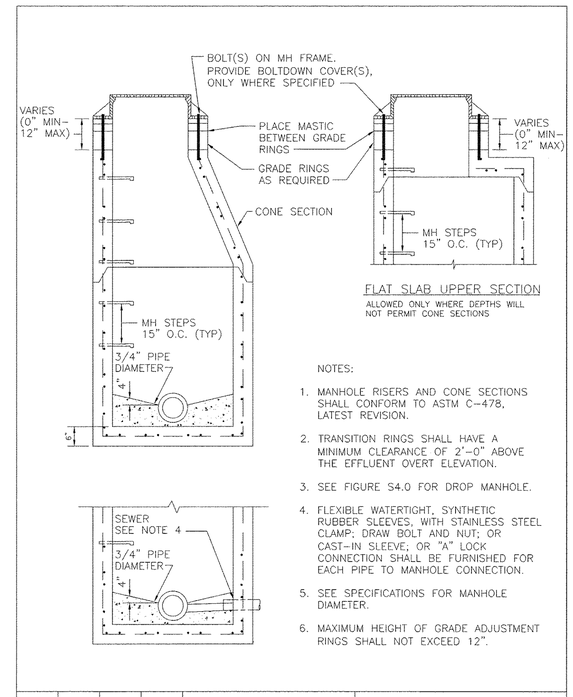

STANDARD MANHOLE DETAIL (3)

NOT TO SCALE

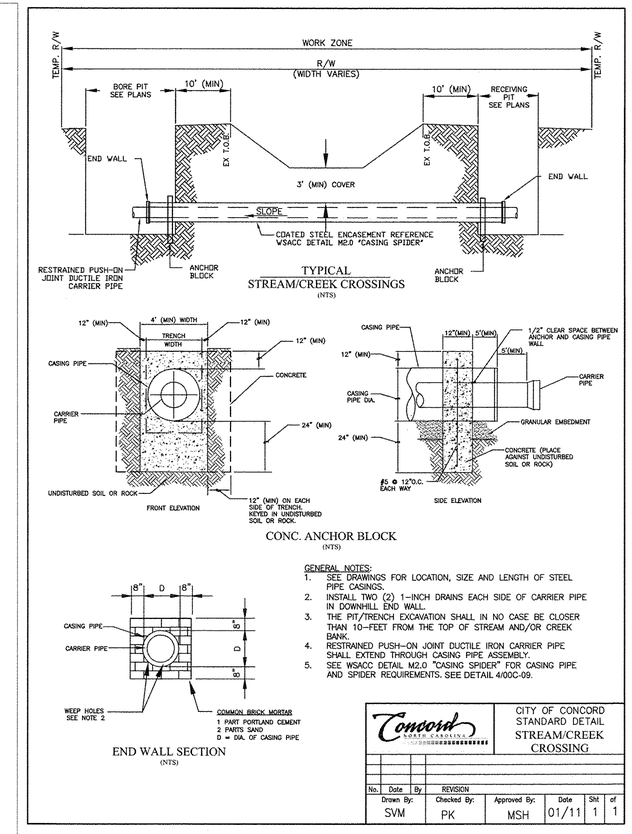

STREAM / CREEK CROSSING (7)

NOT TO SCALE

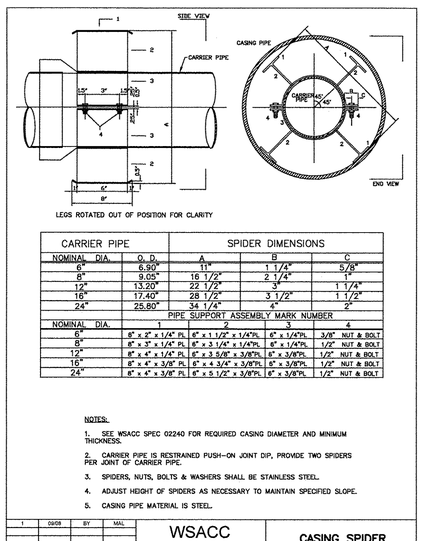

CARRIER PIPE		SPIDER DIMENSIONS		
NOMINAL DIA.	O. D.	A	B	C
6"	6.90"	11"	1 1/4"	5/8"
8"	9.05"	16 1/2"	2 1/4"	1"
12"	13.20"	22 1/2"	3"	1 1/4"
16"	17.40"	28 1/2"	3 1/2"	1 1/2"
24"	25.80"	34 1/4"	4"	2"

PIPE SUPPORT ASSEMBLY MARK NUMBER				
NOMINAL DIA.	1	2	3	4
6"	6" x 2" x 1/4" PL	6" x 1 1/2" x 1/4"PL	6" x 1/4"PL	3/8" NUT & BOLT
8"	8" x 3" x 1/4" PL	6" x 3 1/4" x 1/4"PL	6" x 1/4"PL	1/2" NUT & BOLT
12"	8" x 4" x 1/4" PL	6" x 3 5/8" x 3/8"PL	6" x 3/8"PL	1/2" NUT & BOLT
16"	8" x 4" x 3/8" PL	6" x 4 3/4" x 3/8"PL	6" x 3/8"PL	1/2" NUT & BOLT
24"	8" x 4" x 3/8" PL	6" x 5 1/2" x 3/8"PL	6" x 3/8"PL	1/2" NUT & BOLT

CASING SPIDER (4)

NOT TO SCALE

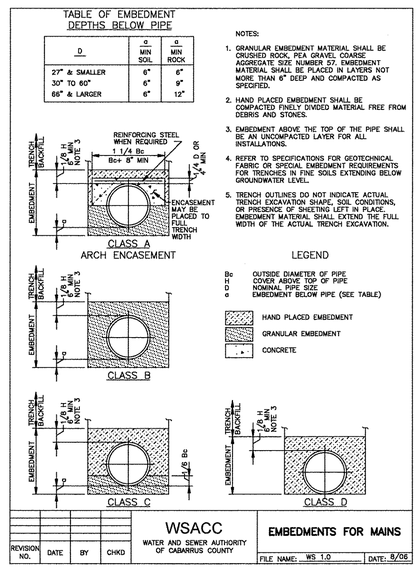

EMBEDMENTS FOR MAINS (5)

NOT TO SCALE

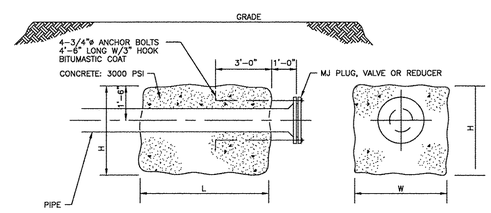

PIPE DIAMETER	L	W	H
4"	2'	2'	3'
6"	5'	3'	3'
8"	6'	3.5'	4'
10"	8'	4'	4'

NOTES

1. CONCRETE ANCHOR TO BE USED ONLY WHERE CONCRETE BLOCKING OR RESTRAINT JOINT PIPE CAN NOT BE USED AND WHEN APPROVED BY OWNER.
2. TABLES ASSUME A MAX WATER PRESSURE OF 150 PSI.

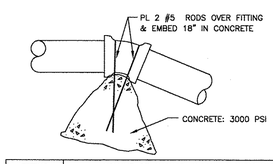

FITTING	VOLUME OF ANCHOR BLOCK IN CUBIC YARD			
SIZE	90° BEND	45° BEND	22-1/2° BEND	11-1/4° BEND
4"	1.5	0.8	0.5	0.5
6"	2.5	1.5	1.0	0.5
8"	4.5	2.5	1.5	0.8
10"	6.5	3.5	2.0	1.0

CONCRETE ANCHOR DETAIL (6)

NOT TO SCALE

ISSUE	DATE	DESCRIPTION
1	9/6/16	ISSUED FOR CONSTRUCTION

PROJECT MANAGER	
PROJECT MANAGER	PB
CHECKED BY	RG
DRAWN BY	TM
PROJECT NUMBER	219915

NORTH CAROLINA PROFESSIONAL SEAL 30971 ENGINEER PATRICK BLANCHARD 9/23/16

CITY OF CONCORD STORMWATER SERVICES
ALFRED M. BROWN OPERATIONS CENTER
850 Warren C. Coleman Blvd.
Concord, North Carolina 28026-0308

ZEMOSA ACRES CULVERT REPLACEMENT
CIVIL DETAILS

0 1" 2"

FILENAME 00C-12.DWG
SCALE AS NOTED
SHEET 00C-12

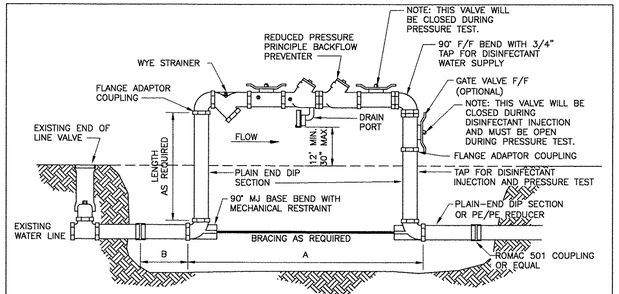

BACKFLOW DEVICE	A
4"	6'-3"
6"	9'
8"	11'-2"

WATER MAIN SIZE	B
6"	17"
8"	19"
12"	22"
16"	26"
24"	32"

WATER MAIN SIZE	MIN. BACKFLOW DEVICE SIZE	MIN. END OF LINE BLOWOFF
6" OR 8"	2"	2"
12"	4"	2.5
16"	6"	4"
24"	8"	6"

REVISION NO.	DATE	BY	CHKD

WSACC
WATER AND SEWER AUTHORITY OF CABARRUS COUNTY

BACKFLOW PREVENTOR BY-PASS CONNECTION FOR FILLING NEW WATER MAINS

FILE NAME: W2.0 DATE: 8/06

BACKFLOW PREVENTOR BY-PASS CONNECTION (1 / –)

NOT TO SCALE

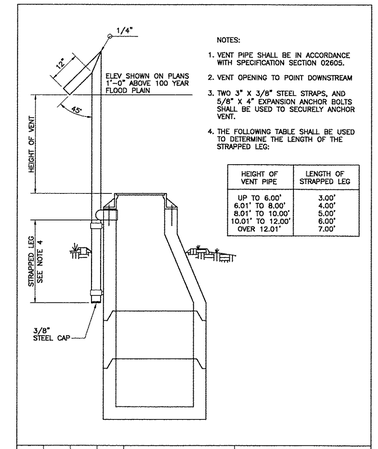

NOTES:

1. VENT PIPE SHALL BE IN ACCORDANCE WITH SPECIFICATION SECTION 02605.
2. VENT OPENING TO POINT DOWNSTREAM
3. TWO 3" X 3/8" STEEL STRAPS, AND 5/8" X 4" EXPANSION ANCHOR BOLTS SHALL BE USED TO SECURELY ANCHOR VENT.
4. THE FOLLOWING TABLE SHALL BE USED TO DETERMINE THE LENGTH OF THE STRAPPED LEG:

HEIGHT OF VENT PIPE	LENGTH OF STRAPPED LEG
UP TO 6.00'	3.00'
6.01' TO 8.00'	4.00'
8.01' TO 10.00'	5.00'
10.01' TO 12.00'	6.00'
OVER 12.01'	7.00'

REVISION NO.	DATE	BY	CHKD

WSACC
WATER AND SEWER AUTHORITY OF CABARRUS COUNTY

STANDARD VENT FOR PRECAST CONCRETE MANHOLE

FILE NAME: S3.0 DATE: 8/06

STANDARD VENT FOR PRECAST CONCRETE MANHOLE (2 / –)

NOT TO SCALE

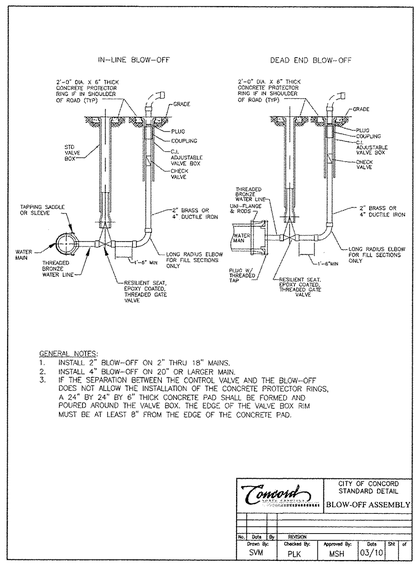

GENERAL NOTES:

1. INSTALL 2" BLOW-OFF ON 2" THRU 18" MAINS.
2. INSTALL 4" BLOW-OFF ON 20" OR LARGER MAIN.
3. IF THE SEPARATION BETWEEN THE CONTROL VALVE AND THE BLOW-OFF DOES NOT ALLOW THE INSTALLATION OF THE CONCRETE PROTECTOR RINGS, A 24" BY 24" BY 6" THICK CONCRETE PAD SHALL BE FORMED AND POURED AROUND THE VALVE BOX. THE EDGE OF THE VALVE BOX RIM MUST BE AT LEAST 8" FROM THE EDGE OF THE CONCRETE PAD.

Concord NORTH CAROLINA High Performance Living

CITY OF CONCORD STANDARD DETAIL

BLOW-OFF ASSEMBLY

No.	Date	By	REVISION

Drawn By:	Checked By:	Approved By:	Date	Dkt	of
SVM	PLK	MSH	03/10		

BLOW-OFF ASSEMBLY (3 / –)

NOT TO SCALE

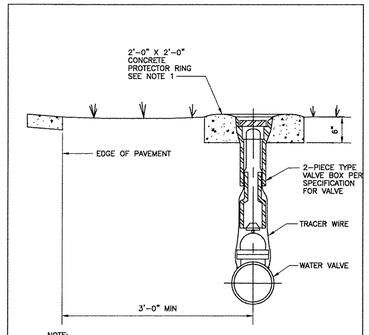

NOTE:

1. USE PROTECTION RING IN SHOULDER OF ROAD.

REVISION NO.	DATE	BY	CHKD

WSACC
WATER AND SEWER AUTHORITY OF CABARRUS COUNTY

VALVE BOX INSTALLATION

FILE NAME: W1.0 DATE: 8/06

VALVE BOX INSTALLATION (4 / –)

NOT TO SCALE

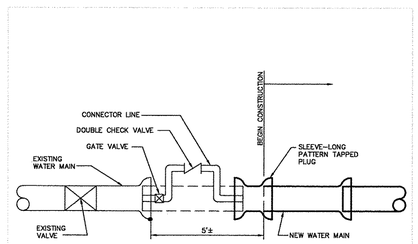

NOTES:

1. INSTALL CONNECTOR LINE FROM EXISTING BLOW OFF ASSEMBLY TO NEW MAIN FOR FILLING, TESTING AND STERILIZING NEW MAIN.
2. CONNECTOR LINE TO BE ASSEMBLED WITH CHECK VALVE AND TO BE OPERATED INDEPENDENT OF EXISTING MAIN.
3. BLOCKING ON EXISTING LINE NOT TO BE DISTURBED.
4. FINAL CONNECTION TO EXISTING MAIN TO BE MADE ONLY AFTER TOTAL PROJECT IS ACCEPTED BY THE OWNER.
5. VALVES ON EXISTING SYSTEM TO BE OPERATED BY OWNER FORCES ONLY.
6. ONLY ONE CONNECTION WILL BE ALLOWED BETWEEN THE EXISTING SYSTEM AND THE NEW CONSTRUCTION UNTIL TESTING AND DISINFECTION IS COMPLETE.

REVISION NO.	DATE	BY	CHKD

WSACC
WATER AND SEWER AUTHORITY OF CABARRUS COUNTY

JUMPER CONNECTION

FILE NAME: W 13.0 DATE: 2/08

JUMPER CONNECTION (5 / –)

NOT TO SCALE

ISSUE	DATE	DESCRIPTION
1	9/6/16	ISSUED FOR CONSTRUCTION

PROJECT MANAGER	
PROJECT MANAGER	PB
CHECKED BY	RG
DRAWN BY	TM
PROJECT NUMBER	219915

NORTH CAROLINA PROFESSIONAL SEAL 30971 ENGINEER PATRICK BLANKENSHIP
9/29/16

CITY OF CONCORD STORMWATER SERVICES
ALFRED M. BROWN OPERATIONS CENTER
850 Warren C. Coleman Blvd.
Concord, North Carolina 28026-0308

ZEMOSA ACRES CULVERT REPLACEMENT
CIVIL DETAILS

0 1" 2"

FILENAME 00C-13.DWG
SCALE AS NOTED

SHEET **00C-13**

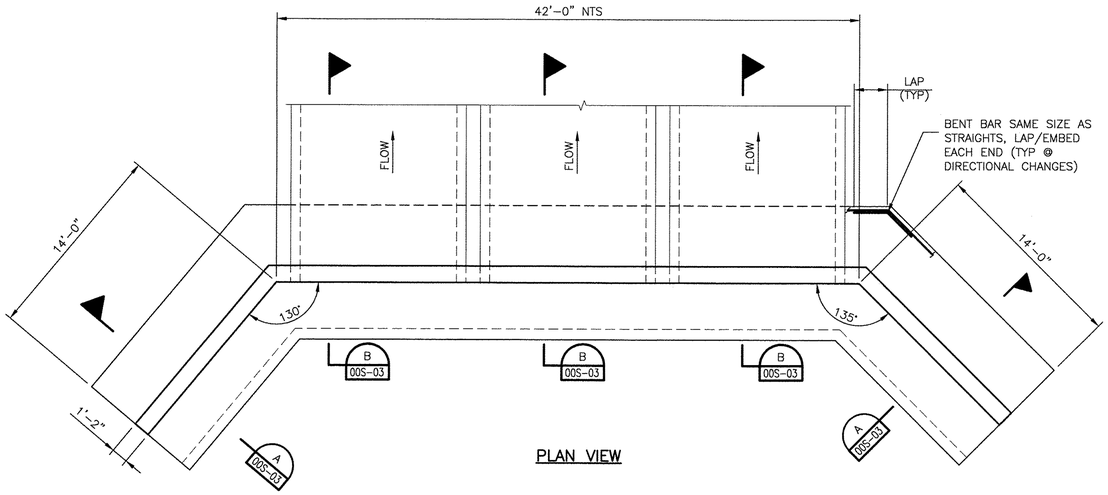

PLAN VIEW

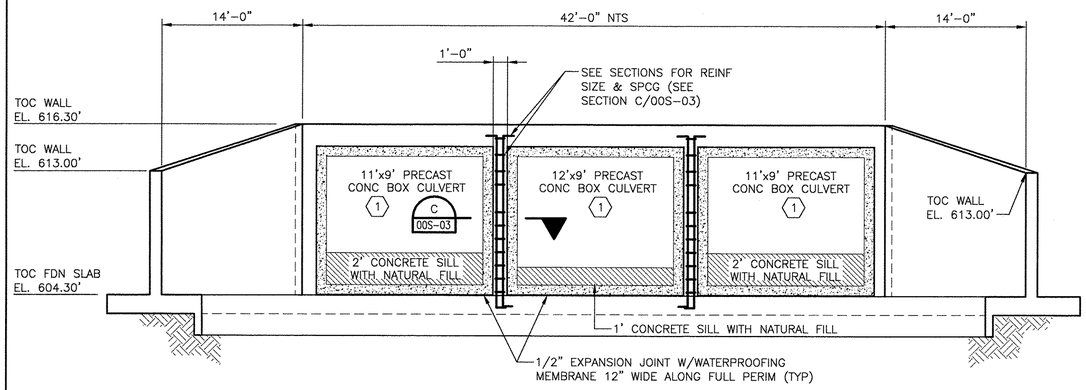

CHADBOURNE DRIVE DOWNSTREAM ELEVATION

3/16"=1'-0"

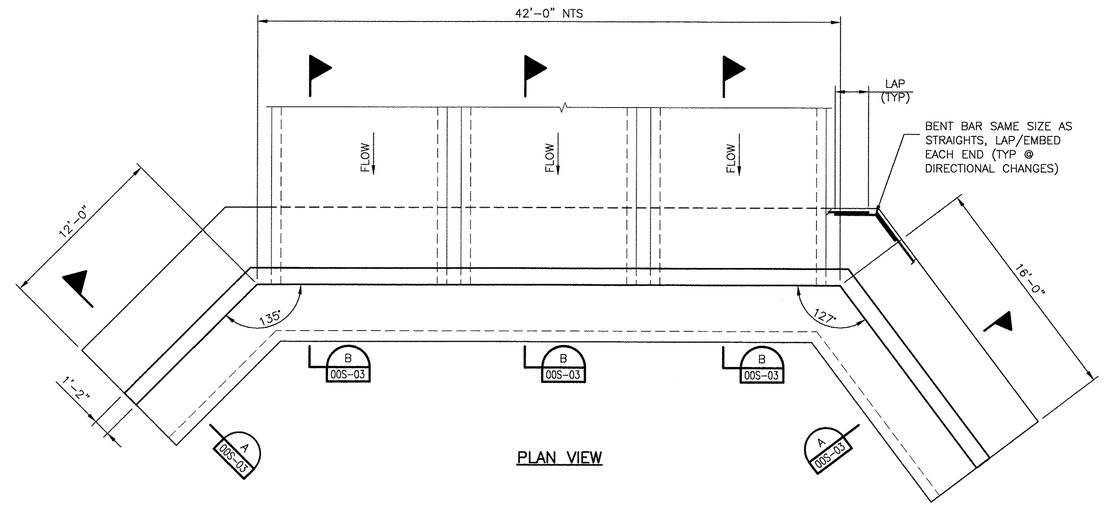

PLAN VIEW

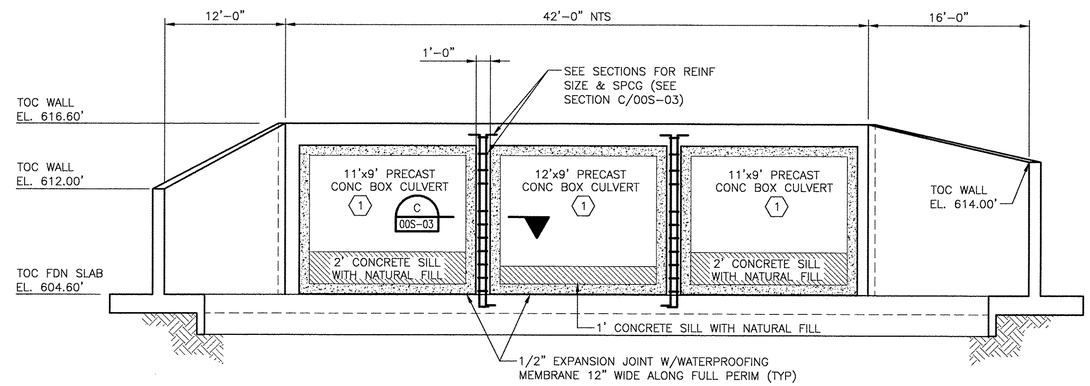

CHADBOURNE DRIVE UPSTREAM ELEVATION

3/16"=1'-0"

NOTES:
1. SEE 00S-05 FOR GENERAL NOTES AND DETAILS.
2. CULVERT WALL THICKNESS ASSUMED FOR DIMENSIONING BUT TOP AND SIDE SLABS MAY NEED TO BE FIELD ADJUSTED TO MEET ELEVATIONS AND WIDTHS.

KEY NOTES:
(1) A TOTAL MINIMAL HYDRAULIC CONVEYANCE AREA OF 234 SF MUST BE MAINTAINED. SEE DETAIL 1 ON SHEET 00S-05 FOR CONCRETE SILL DETAIL.

Concord NORTH CAROLINA High Performance Living

HDR

ISSUE	DATE	DESCRIPTION
1	9/6/16	ISSUED FOR CONSTRUCTION

PROJECT MANAGER	
PROJECT MANAGER	PB
CHECKED BY	RG
DRAWN BY	TM
PROJECT NUMBER	219915

NORTH CAROLINA PROFESSIONAL ENGINEER SEAL 027768 9/9/16 MICHAEL TEPEDINO

CITY OF CONCORD STORMWATER SERVICES
ALFRED M. BROWN OPERATIONS CENTER
850 Warren C. Coleman Blvd.
Concord, North Carolina 28026-0308

ZEMOSA ACRES CULVERT REPLACEMENT
HEADWALL DETAILS - CHADBOURNE AVENUE

0 1" 2"

FILENAME 00S-01.dwg
SCALE AS NOTED

SHEET **00S-01**

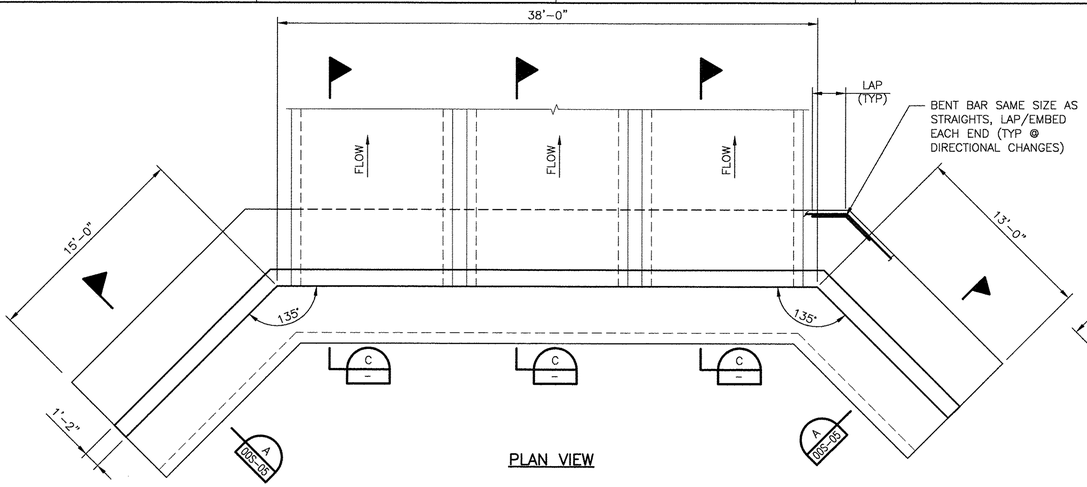

PLAN VIEW

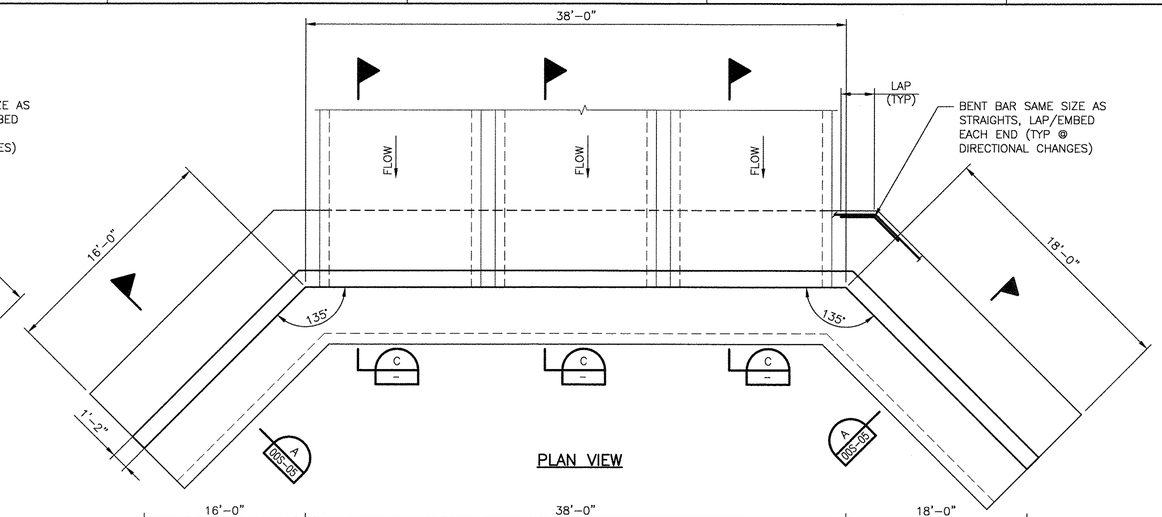

PLAN VIEW

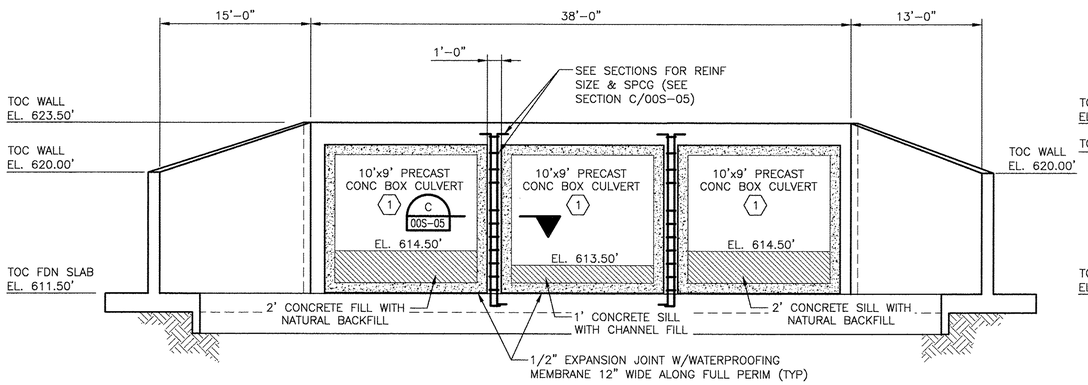

CHELWOOD DRIVE DOWNSTREAM ELEVATION

3/16"=1'-0"

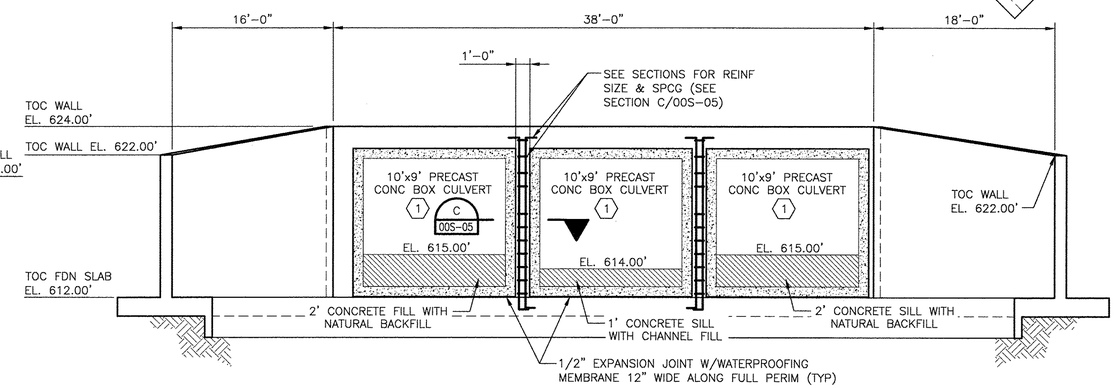

CHELWOOD DRIVE UPSTREAM ELEVATION

3/16"=1'-0"

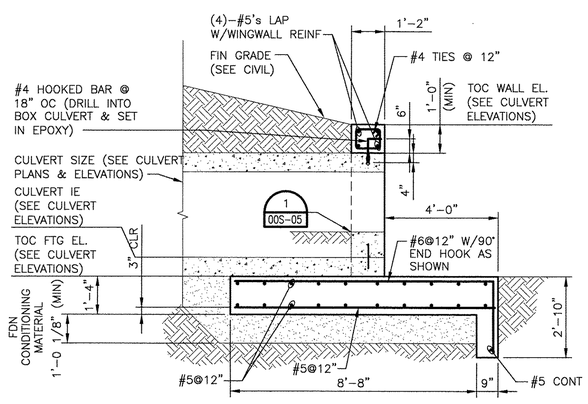

SECTION C

3/8"=1'-0"

NOTES:

1. SEE 00S-05 FOR GENERAL NOTES AND DETAILS.
2. CULVERT WALL THICKNESS ASSUMED FOR DIMENSIONING BUT TOP AND SIDE SLABS MAY NEED TO BE FIELD ADJUSTED TO MEET ELEVATIONS AND WIDTHS.

KEY NOTES:

1. A TOTAL MINIMAL HYDRAULIC CONVEYANCE AREA OF 198 SF MUST BE MAINTAINED. SEE DETAIL 1 ON SHEET 00S-05 FOR CONCRETE SILL DETAIL.

Concord NORTH CAROLINA High Performance Living

HDR

ISSUE	DATE	DESCRIPTION
1	6/3/16	NOT ISSUED FOR CONSTRUCTION

PROJECT MANAGER	
PROJECT MANAGER	PB
CHECKED BY	RG
DRAWN BY	TM
PROJECT NUMBER	219915

NORTH CAROLINA PROFESSIONAL ENGINEER SEAL 027764 MICHAEL TEPEDINO

CITY OF CONCORD STORMWATER SERVICES
ALFRED M. BROWN OPERATIONS CENTER
850 Warren C. Coleman Blvd.
Concord, North Carolina 28026-0308

ZEMOSA ACRES CULVERT REPLACEMENT
HEADWALL DETAILS - CHELWOOD DRIVE

0 1" 2"

FILENAME 00S-02.dwg

SCALE AS NOTED

SHEET **00S-02**

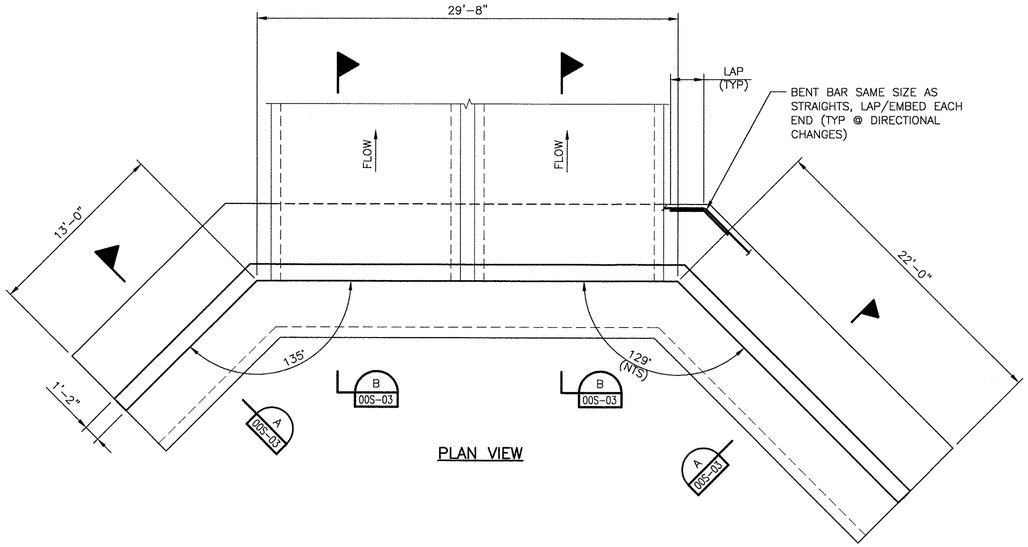

PLAN VIEW

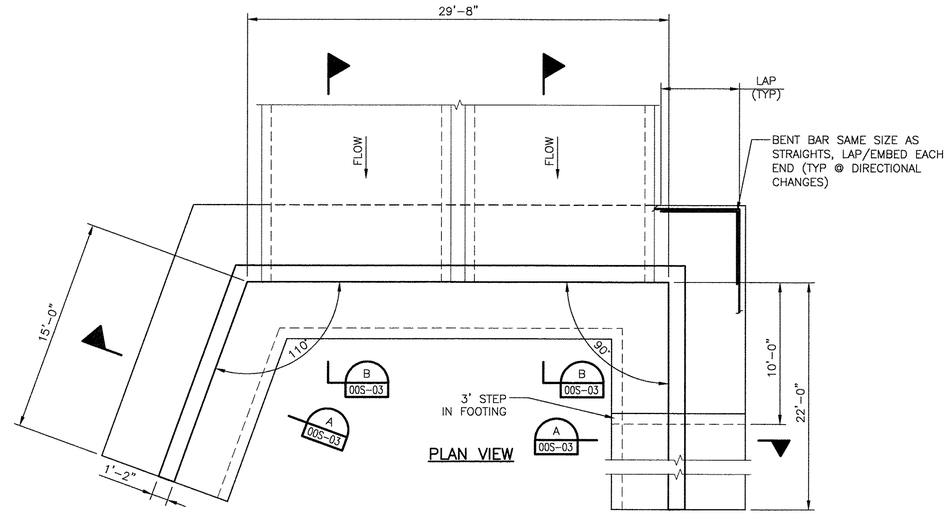

PLAN VIEW

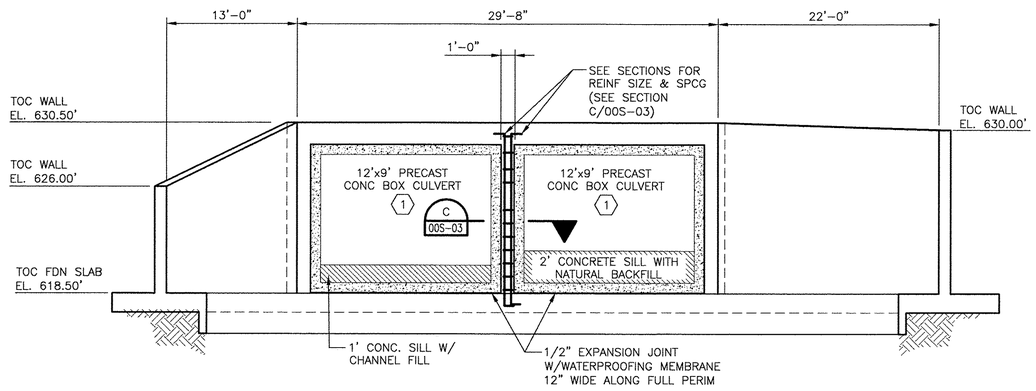

CHANNING CIRCLE DOWNSTREAM ELEVATION

3/16"=1'-0"

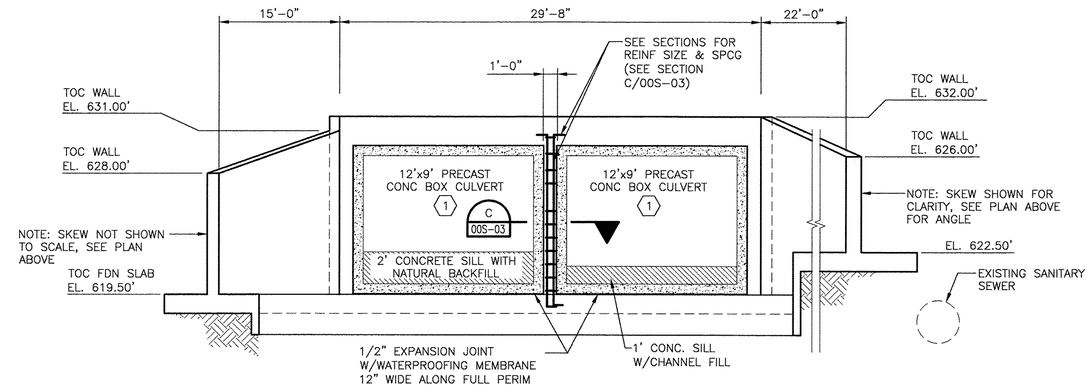

CHANNING CIRCLE UPSTREAM ELEVATION

3/16"=1'-0"

NOTES:

1. SEE 00S-05 FOR GENERAL NOTES AND DETAILS.
2. CULVERT WALL THICKNESS ASSUMED FOR DIMENSIONING BUT TOP AND SIDE SLABS MAY NEED TO BE FIELD ADJUSTED TO ELEVATIONS AND WIDTHS.

KEY NOTES:

(1) A TOTAL MINIMAL HYDRAULIC CONVEYANCE AREA OF 171 SF MUST BE MAINTAINED. SEE DETAIL 1 ON SHEET 00S-05 FOR CONCRETE SILL DETAIL.

Concord NORTH CAROLINA High Performance Living

HDR

ISSUE	DATE	DESCRIPTION
1	9/6/16	ISSUED FOR CONSTRUCTION

PROJECT MANAGER	
PROJECT MANAGER	PB
CHECKED BY	RG
DRAWN BY	TM
PROJECT NUMBER	219915

NORTH CAROLINA PROFESSIONAL ENGINEER SEAL 037764 9/26/16 MICHAEL TEPEDINO

CITY OF CONCORD STORMWATER SERVICES
ALFRED M. BROWN OPERATIONS CENTER
850 Warren C. Coleman Blvd.
Concord, North Carolina 28026-0308

ZEMOSA ACRES CULVERT REPLACEMENT
HEADWALL DETAILS - CHANNING CIRCLE

0 1" 2"

FILENAME: 00S-03.dwg
SCALE: AS NOTED
SHEET: **00S-03**

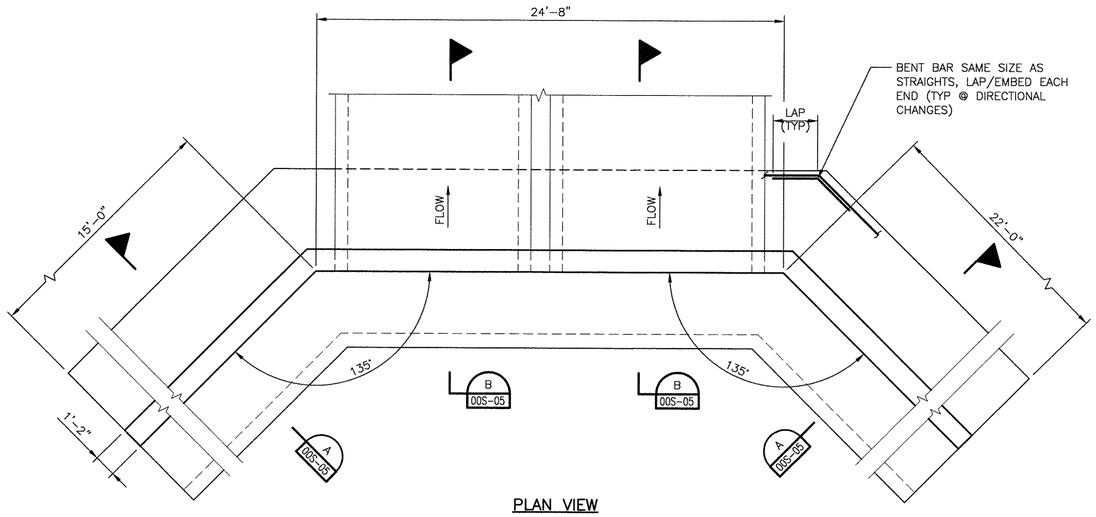

PLAN VIEW

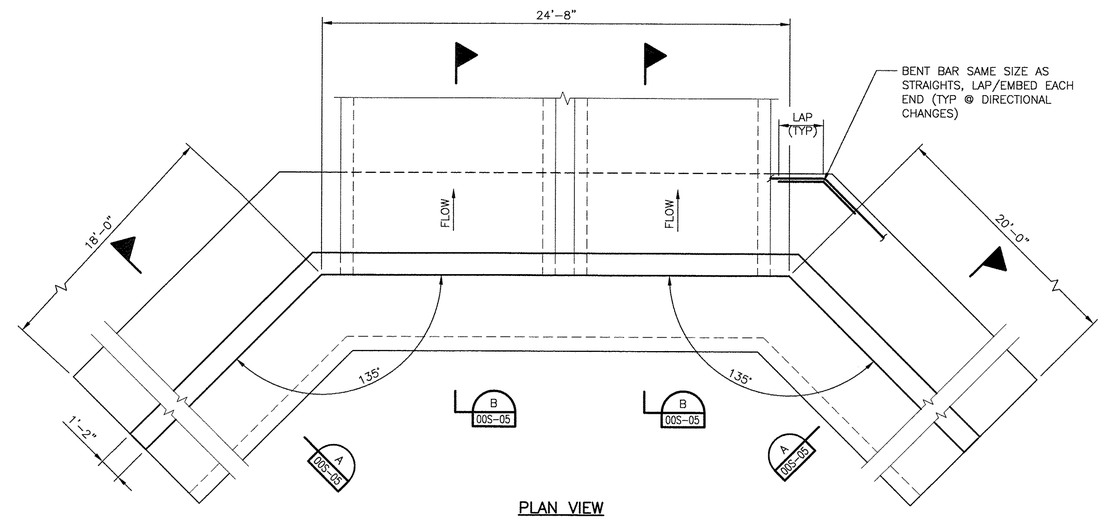

PLAN VIEW

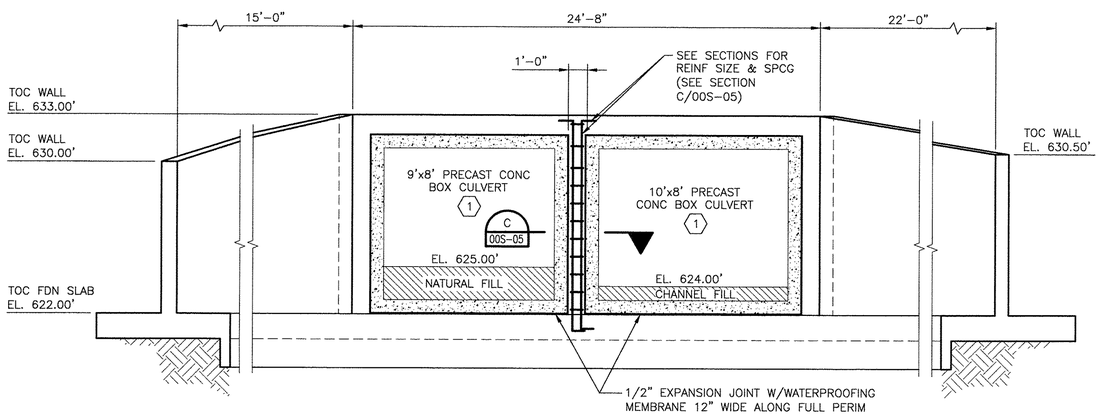

HANOVER DRIVE DOWNSTREAM ELEVATION

1/4"=1'-0"

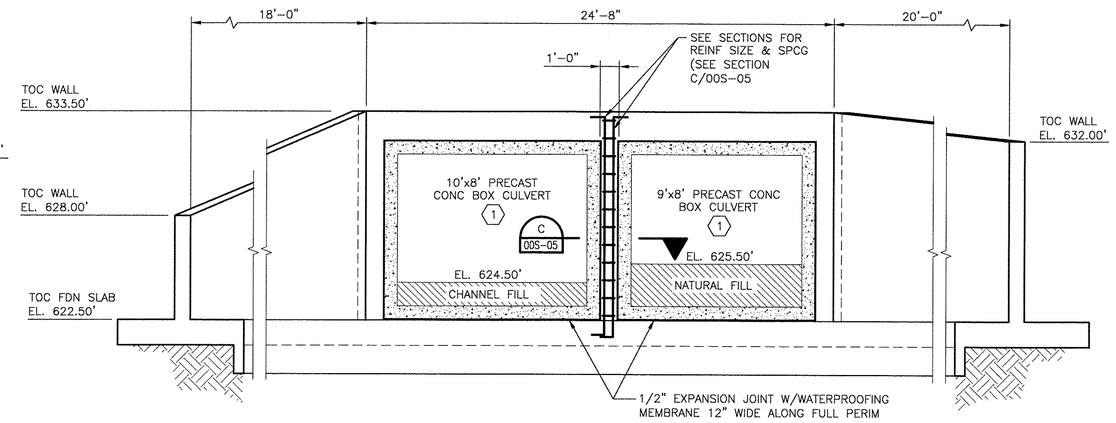

HANOVER DRIVE UPSTREAM ELEVATION

1/4"=1'-0"

NOTES:

1. SEE 00S-05 FOR GENERAL NOTES AND DETAILS.
2. CULVERT WALL THICKNESS ASSUMED FOR DIMENSIONING BUT TOP AND SIDE SLABS MAY NEED TO BE FIELD ADJUSTED TO MEET ELEVATIONS AND WIDTHS.

KEY NOTES:

1. A TOTAL MINIMAL HYDRAULIC CONVEYANCE AREA OF 112 SF MUST BE MAINTAINED. SEE DETAIL 1 ON SHEET 00S-05 FOR CONCRETE SILL DETAIL.

Concord NORTH CAROLINA High Performance Living

HDR

ISSUE	DATE	DESCRIPTION
1	6/3/16	NOT ISSUED FOR CONSTRUCTION

PROJECT MANAGER	
PROJECT MANAGER	PB
CHECKED BY	RG
DRAWN BY	TM
PROJECT NUMBER	219915

NORTH CAROLINA PROFESSIONAL ENGINEER SEAL 029764 MICHAEL TEPEDINO 9/29/16

CITY OF CONCORD STORMWATER SERVICES
ALFRED M. BROWN OPERATIONS CENTER
850 Warren C. Coleman Blvd.
Concord, North Carolina 28026-0308

ZEMOSA ACRES CULVERT REPLACEMENT
HEADWALL DETAILS - HANOVER DRIVE

0 1" 2"

FILENAME 00S-04.dwg
SCALE AS NOTED
SHEET **00S-04**

CONCRETE NOTES

1. REINFORCED CONCRETE WORK SHALL CONFORM TO ALL REQUIREMENTS OF ACI 301–05, "SPECIFICATIONS FOR STRUCTURAL CONCRETE FOR BUILDINGS", EXCEPT AS MODIFIED BY SUPPLEMENT REQUIREMENTS. THE WORK SHALL ALSO CONFORM TO ACI 318–05, "BUILDING CODE REQUIREMENTS FOR REINFORCED CONCRETE".

2. CONCRETE MIX:
   A. A CONCRETE MIX DESIGN SHALL BE SUBMITTED TO THE ENGINEER FOR APPROVAL PRIOR TO ANY POURS. MIX SPECIFICATIONS ARE AS FOLLOWS:

      28 DAY COMPRESSIVE STRENGTH: 4000 PSI
      MAXIMUM WATER/CEMENT RATIO: 0.45
      AIR CONTENT: 6% +/– 1.5%
      SLUMP: 4" MAX, 1" MIN.
      PORTLAND CEMENT: ASTM C150, TYPE I
      AGGREGATE: 1" COARSE, CONFORM TO ASTM C33, SIZE 57
      WATER–REDUCING ADMIXTURES: ASTM C494
      WATER: POTABLE, CLEAN, FREE OF OILS, ACIDS AND ORGANIC MATTER
      MAXIMUM TOTAL WATER SOLUBLE CHLORIDE ION CONTENT CONTRIBUTED FROM ALL INGREDIENTS OF CONCRETE INCLUDING WATER, AGGREGATES, CEMENTITIOUS MATERIALS AND ADMIXTURES BY WEIGHT OF CEMENT: 0.10 PERCENT, MAXIMUM.

   B. THE CONTRACTOR SHALL SUBMIT PRODUCT DATA FOR CONCRETE MIX PROPORTIONS PRIOR TO PLACING CONCRETE. THE SUBMITTAL SHALL INCLUDE THE FOLLOWING INFORMATION:

      1. PROPORTIONS BY WEIGHT OF ALL INGREDIENTS IN MIX
      2. AIR CONTENT
      3. UNIT WEIGHT
      4. WATER–CEMENT RATIOS
      5. TRIAL MIX COMPRESSIVE STRENGTHS AT 7 AND 28 DAYS
      6. MATERIAL CERTIFICATIONS FOR ALL INGREDIENTS

   C. ABSOLUTELY NO WATER MAY BE ADDED TO THE CONCRETE AT THE JOB SITE WITHOUT THE APPROVAL OF OWNER'S QUALIFIED CONCRETE TESTING LABORATORY.

3. CONCRETE COVER:
   UNLESS OTHERWISE NOTED, PROVIDE CONCRETE CLEAR COVER FOR REINFORCING AS FOLLOWS:
   CONCRETE DEPOSITED AGAINST EARTH: 3–INCHES
   ALL OTHER: 2 INCHES

4. PLACING CONCRETE:
   A. DEPOSIT CONCRETE IN FORMS IN HORIZONTAL LAYERS IN A MANNER TO AVOID INCLINED CONSTRUCTION JOINTS.

   B. CONCRETE IN FORMS SHALL BE PLACED IN HORIZONTAL LAYERS, NO DEEPER THAN 1'–6", IN A MANNER TO AVOID INCLINED CONSTRUCTION JOINTS. CONCRETE SHALL NOT BE DEPOSITED IN ANY FORM WHERE THE DROP EXCEEDS 4–FEET WITHOUT THE USE OF A CHUTE OR OTHER APPROVED METHOD OF CONVEYANCE.

   C. CONSOLIDATION: CONSOLIDATE ALL CONCRETE CONFORMING TO ACI 301 AND ACI 309R USING MECHANICAL VIBRATORS SUPPLEMENTED WITH HAND RODDING AND TAMPING, SO THAT CONCRETE IS WORKED AROUND REINFORCEMENT AND EMBEDDED ITEMS INTO ALL PARTS OF THE FORMS.

   D. IN HOT WEATHER, THE TEMPERATURE OF THE CONCRETE SHALL BE LESS THAN 90–DEGREES WORK SHALL BE IN ACCORDANCE WITH ACI 305R, "RECOMMENDED PRACTICE FOR HOT WEATHER CONCRETING".

   E. IN COLD WEATHER, THE TEMPERATURE OF THE SUBSTRATE ON WHICH CONCRETE IS PLACED SHALL BE GREATER THAN 40 DEG–F AND SHALL NOT CONTAIN FROZEN MATERIAL. WORK SHALL BE IN ACCORDANCE WITH ACI 306R, "RECOMMENDED PRACTICE FOR COLD WEATHER CONCRETING".

5. FORMWORK:
   A. CONTRACTOR IS RESPONSIBLE FOR DESIGN, ERECTION, AND REMOVAL OF ALL FORMWORK.

   B. CONSTRUCT FORMWORK SO THAT THE CONCRETE MEMBERS AND STRUCTURES ARE OF CORRECT SIZE, SHAPE, ALIGNMENT, ELEVATION, AND POSITION.

   C. DURING CONCRETE PLACING, IF EITHER MISALIGNMENT OF FORMS OR SCREEDS, EXCESSIVE DEFLECTION OF FORMS, OR DISPLACEMENT OF REINFORCEMENT SHOULD OCCUR, IMMEDIATE CORRECTIVE MEASURES SHALL BE TAKEN TO THE EXTENT NECESSARY EVEN IF PLACING OPERATIONS MUST BE STOPPED AND/OR CONCRETE ALREADY IN PLACE REMOVED FROM WITHIN THE FORMS. CORRECTIVE MEASURES SHALL INCLUDE ANY ACTIONS REQUIRED TO ENSURE THAT ACCEPTABLE LINES AND SURFACES, AS WELL AS REQUIRED DIMENSIONS AND CROSS SECTIONS ARE MAINTAINED.

   D. DURING, AND IMMEDIATELY AFTER, PLACEMENT OF CONCRETE IN FORMS, SHORING SHALL BE TIGHTENED AND READJUSTED TO MAINTAIN GRADES AND LEVELS.

   E. CHAMFER STRIPS: ALL PERMANENTLY EXPOSED EDGES SHALL HAVE A 3/4", 45 DEGREE CHAMFER UNLESS NOTED OTHERWISE.

6. CONCRETE FINISHES:
   A. REPAIR OF SURFACE DEFECTS: IMMEDIATELY AFTER FORM REMOVAL, ALL DAMAGED OR IMPERFECT WORK (HONEYCOMB, BUG HOLES, ETC.) SHALL BE REPAIRED PER ACI 301. IF THE WORK IS SEVERELY DAMAGED AND STRUCTURALLY UNACCEPTABLE, IT SHALL BE REBUILT TO THE EXTENT DIRECTED BY THE ENGINEER AT CONTRACTOR'S EXPENSE.

   B. PROVIDE THE FOLLOWING FINISHES AS DEFINED IN ACI 301 UNLESS OTHERWISE SPECIFIED:
      1. EXTERIOR WALLS AND SLABS: BROOM FINISH

   C. PROVIDE TOLERANCES AS DEFINED IN ACI 117 (TOLERANCE FOR CONCRETE CONSTRUCTION AND MATERIALS):
      1. ALL CONCRETE:CLASS B: 1/4–INCH IN 10–FEET.
      2. WALLS: SMOOTH FORM.

   D. AREAS SHALL BE FINISHED SO THAT NO PONDING WATER REMAINS.

7. CONSTRUCTION, AND CONTROL JOINTS (IF REQUIRED BY CONTRACTOR):
   A. PROVIDE AT LOCATIONS INDICATED.

   B. PROVIDE SATISFACTORY MEANS FOR TRANSFERRING SHEAR AND OTHER FORCES THROUGH THE CONSTRUCTION JOINT.

   C. INSTALL CONSTRUCTION JOINTS PERPENDICULAR TO MAIN REINFORCEMENT WITH ALL REINFORCEMENT CONTINUED ACROSS CONSTRUCTION JOINTS.

   D. AT LEAST 48 HOURS SHALL ELAPSE BETWEEN PLACING OF ADJOINING CONCRETE CONSTRUCTION.

   E. THOROUGHLY CLEAN AND REMOVE ALL LOOSE AND FOREIGN PARTICLES FROM CONSTRUCTION JOINTS.

   F. BEFORE NEW CONCRETE IS PLACED, COAT ALL CONSTRUCTION JOINTS WITH AN APPROVED BONDING ADHESIVE USED AND APPLIED IN ACCORDANCE WITH MANUFACTURER'S INSTRUCTIONS.

8. CURING:
   A. 1. ALL HORIZONTAL SURFACES OF CONCRETE SHALL BE CURED BY THE USE OF ONE OF THE FOLLOWING METHODS: (1) WATER PROOF SHEET MATERIAL CONFORMING TO ASTM C171, (2) CONTINUOUSLY MOISTENED BURLAP, (3) THE PONDING METHOD, (4) THE SPRINKLING METHOD, OR (5) A COVERING OF 1–INCH SAND OR SAWDUST AND KEPT CONTINUOUSLY WET.

   B. BEGIN CURING AS SOON AS THE CONCRETE HAS SET SUFFICIENTLY SO THAT FINISHES, AS SPECIFIED HEREINAFTER, WILL NOT BE MARRED BY THIS OPERATION.

   C. ALL CONCRETE SHALL HAVE CURING MAINTAINED FOR NOT LESS THAN SEVEN DAYS AFTER FORM REMOVAL.

   D. WHERE A CONCRETE CURING COMPOUND IS USED, IT SHALL BE A DISSIPATING TINTED PRODUCT PER ASTM C309. THE FILM MUST CHEMICALLY BREAK DOWN IN A TWO TO FOUR WEEK PERIOD AFTER APPLICATION.

9. REINFORCEMENT:
   A. ALL REINFORCING STEEL SHALL BE NEW BILLET STEEL, GRADE 60, AND SHALL CONFORM TO ASTM A615. ALL SPLICES SHALL BE IN ACCORDANCE WITH ACI 318–05 (CLASS B TOP BAR).

   B. REINFORCEMENT SHALL BE CLEANED, BEFORE PLACEMENT, TO REMOVE ALL DUST, DIRT, RUST, MILL SCALE, GREASE, AND OTHER FOREIGN MATTER, WHICH COULD PREVENT OR REDUCE BONDING. THE CONTRACTOR SHALL ENSURE THAT SUCH CLEANLINESS IS MAINTAINED UNTIL CONCRETE HAS BEEN PLACED.

   C. SPLICING OF REINFORCEMENT SHALL NOT BE PERMITTED EXCEPT WHERE SHOWN ON APPROVED SHOP DRAWINGS. SPLICES SHALL PROVIDE LAP TO TRANSFER THE STRESS BETWEEN BARS BY BOND.

   D. REINFORCEMENT SHALL BE SUPPORTED BY ACCESSORIES WHICH WILL PROVIDE THE SPECIFIED PROTECTIVE CONCRETE COVER. PRECAST CONCRETE BRICKS MAY ONLY BE USED TO SUPPORT BARS OFF OF GRADE.

   E. DO NOT WELD REINFORCING BARS.

   F. FIELD ADJUST REINFORCING AT OPENINGS AND EMBEDDED ITEMS AS SPECIFIED OR REQUIRED.

PRECAST CULVERT NOTES

1. ASSUMED LIVE LOAD. HS20–44 ALTERNATE LOADING.

2. CAST–IN–PLACE CONCRETE SHALL BE POURED IN THE FOLLOWING ORDER:
   1. LEVELING PAD
   2. WING FOOTINGS AND CURTAIN WALL
   3. HEADWALLS, WING WALLS.

3. ALL PRECAST UNITS SHALL BE PLACED PRIOR TO POURING THE WINGS, END CURTAINS WALLS AND HEADWALLS. THE EXTERIOR PRECAST UNITS AND LEVELING PAD SHALL BE UNDERMINED TO PROVIDE FOR THE WING FOOTINGS TO BE POURED TO THE DEPTH AND DIMENSIONS AS SHOWN ON THIS PLAN SHEET.

4. FOUNDATION CONDITIONING MATERIAL SHALL HAVE A THICKNESS OF AT LEAST 1'–0"BELOW THE BOTTOM OF THE LEVELING PAD. THE MATERIAL SHALL BE FORMED AND SCREENED TO THE PROPER ELEVATION AT LEAST 1'–0" BEYOND THE SIDES OF THE LEVELING PAD.

5. THE PRECAST UNITS SHALL BE CAREFULLY POSITIONED ON THE PREPARED LEVELING PAD, FEMALE END UPGRADE WITH THE MALE END FULLY INSERTED AND EACH JOINT CHECKED FOR ALIGNMENT PRIOR TO JACKING THE UNIT INTO PLACE. SATISFACTION FITTING AND PROPER GRADE SHALL BE MAINTAINED AS THE WORK PROCEEDS.

6. WHEN ANY PRECAST UNIT IS DAMAGED DURING HANDLING, THE ENGINEER AT HIS DISCRETION SHALL REJECT THE UNIT AS BEING UNFIT FOR INSTALLATION AND THE CONTRACTOR SHALL REMOVE SUCH REJECTED UNIT FROM THE PROJECT. MINOR DAMAGE TO THE UNIT MAY BE REPAIRED BY THE CONTRACTOR WHEN PERMITTED BY THE ENGINEER.

7. CARE SHALL BE TAKEN DURING BACKFILL AND COMPACTION OPERATION TO MAINTAIN ALIGNMENT AND PREVENT DAMAGE TO THE JOINTS. UNITS WHICH BECOME MISALIGNED, SHOW EXCESSIVE SETTLEMENT OR HAVE OTHERWISE BEEN DAMAGED BY THE CONTRACTOR'S OPERATION SHALL AT THE DISCRETION OF THE ENGINEER BE REMOVED AND REPLACED BY THE CONTRACTOR AT NO COST TO THE CITY OF CONCORD.

8. FOR PRECAST REINFORCED CONCRETE BOX CULVERT, SEE SPECIAL PROVISIONS.

SOIL NOTES

1. COMPACT EXISTING SOIL UNDER FOUNDATION TO 95% OF MAXIMUM DRY DENSITY PER ASTM D698 AT OPTIMUM MOISTURE CONTENT.

2. EXISTING EXCAVATED SUBGRADE SHALL BE VERIFIED TO SUPPORT MINIMUM 2,000 PSF NET BEARING PRESSURE.

3. SOIL SHALL BE REMOVED AND REPLACED IF EVER ALLOWED TO FREEZE OR RECEIVE STANDING WATER DURING CONSTRUCTION.

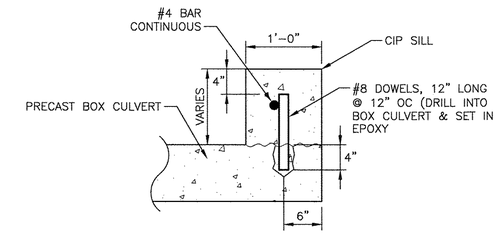

CONCRETE SILL (1)
1" = 1'

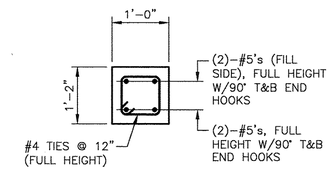

SECTION (C)
3/4"=1'–0"

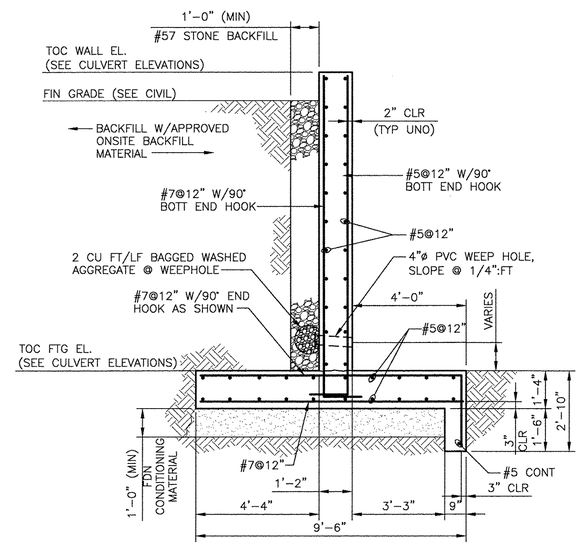

SECTION (A)
3/8"=1'–0"

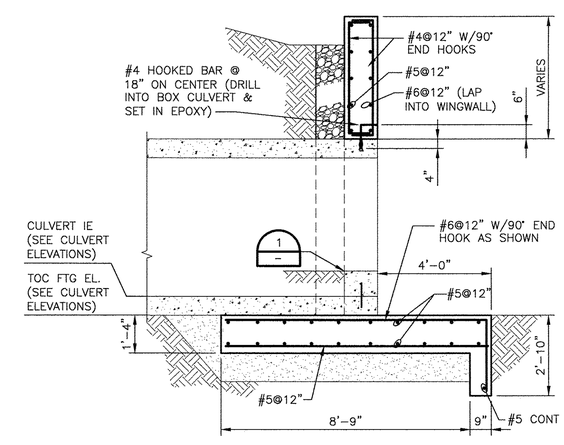

NOTE:
SEE SECTION "A" FOR INFORMATION NOT SHOWN.

SECTION (B)
3/8"=1'–0"

ISSUE	DATE	DESCRIPTION
1	9/6/16	ISSUED FOR CONSTRUCTION

PROJECT MANAGER	
PROJECT MANAGER	PB
CHECKED BY	RG
DRAWN BY	TM
PROJECT NUMBER	219915

NORTH CAROLINA PROFESSIONAL SEAL 027764 ENGINEER MICHAEL TEPEDINO 9/25/16

CITY OF CONCORD STORMWATER SERVICES
ALFRED M. BROWN OPERATIONS CENTER
850 Warren C. Coleman Blvd.
Concord, North Carolina 28026-0308

ZEMOSA ACRES CULVERT REPLACEMENT
STRUCTURAL NOTES & SECTIONS

FILENAME: 00S–05.dwg
SCALE: AS NOTED
SHEET: **00S-05**

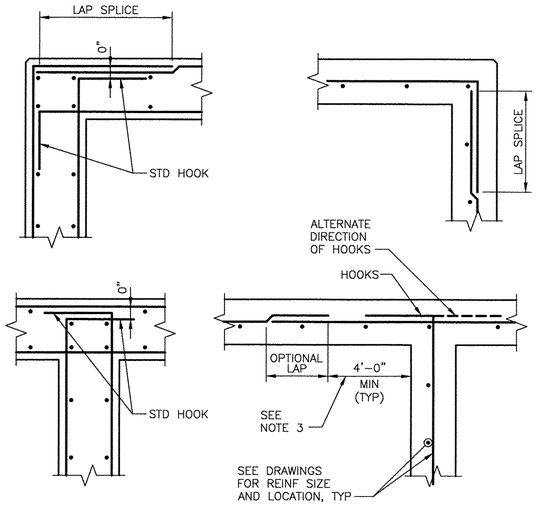

NOTE:

1. ALL HOOKS SHALL BE STD 90 DEGREE HOOKS.

2. SEE DRAWINGS FOR ADDITIONAL HORIZONTAL BARS. STAGGER BETWEEN TYPICAL REINF SPACING, EXTEND TO 1/5 OF DISTANCE TO NEAREST ADJACENT WALL IN EACH DIRECTION, UNO.

3. OPTIONAL LAP LOCATION. APPLIES TO BOTH DOUBLE AND SINGLE LAYER CONDITIONS TYP.

TYPICAL WALL REINFORCEMENT AT CORNERS & INTERSECTIONS

1 / –

NTS

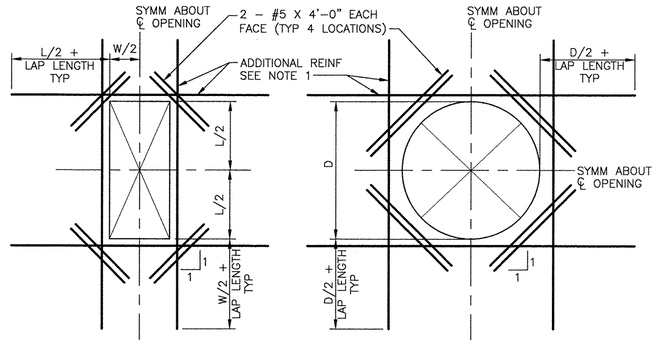

RECTANGULAR OPENING DETAIL

CIRCULAR OPENING DETAIL

NOTES:

1. PROVIDE ADDITIONAL REINFORCING THE SAME SIZE AS DISCONTINUOUS REINFORCEMENT AT OPENING. QUANTITY OF REINFORCING IN EACH DIRECTION SHALL BE EQUAL TO OR ONE GREATER THAN THE NUMBER OF DISCONTINUOUS BARS. PLACE 1/2 OF ADDITIONAL REINFORCING BARS EACH SIDE OF OPENING. PLACE ADDITIONAL REINFORCEMENT AT 3" OC (TYPICAL BOTH DIRECTIONS AND ALL LAYERS OF REINFORCEMENT). START FIRST BAR 2" CLEAR TO OPENING.
2. EXTEND ADDITIONAL REINFORCING BEYOND EDGE OF OPENING AS SHOWN ABOVE. ADDITIONAL BARS MAY TERMINATE AT THE END OF THE WALL WITH A STANDARD HOOK WHERE THE LENGTH OF THE WALL WILL NOT PERMIT BARS TO EXTEND AS SHOWN ABOVE.
3. TYPICAL WALL OR SLAB REINFORCING NOT SHOWN FOR CLARITY. TERMINATE TYPICAL REINFORCING 2" CLEAR TO OPENING.
4. OPENINGS 12" OR LESS IN SLABS AND OPENINGS 18" OR LESS IN WALLS, NO EXTRA REBARS ARE REQUIRED UNLESS SHOWN OTHERWISE. TYPICAL REINFORCING SHALL BE RESPACED (NOT CUT) TO ALLOW FOR OPENINGS TO BE MADE.
5. UNLESS SHOWN OTHERWISE ON DRAWINGS, PROVIDE EXTRA REINFORCING AROUND OPENINGS AS SHOWN AND INDICATED ABOVE.
6. PROVIDE ADDITIONAL DOWELS PER NOTE 1 ABOVE FOR ALL OPENINGS NEAR THE FLOOR SLAB, BASE SLAB, OR CORNERS

EXTRA REINFORCING AROUND OPENINGS

2 / –

NOT TO SCALE

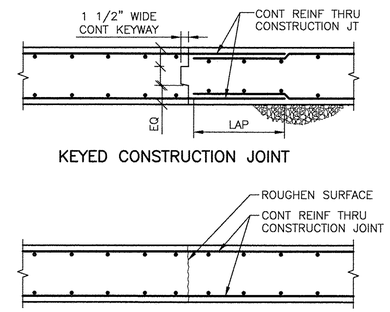

NOTES:

1. FURNISH CONSTRUCTION JOINTS SHOWN HERE AT ALL WALL VERTICAL AND SLAB CONSTRUCTION JOINTS.

CONSTRUCTION JOINT (CJ)

3 / –

NOT TO SCALE

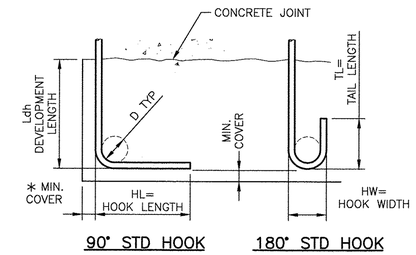

BAR SIZE GRADE 60	HL	HW	TL	D	f'c=4.0 OR 4.5 KSI Ldh *
#3	6"	3"	3"	2 1/4"	6"
#4	8"	4"	4 1/2"	3"	7"
#5	10"	5"	5"	3 3/4"	9"
#6	1'-0"	6"	6"	4 1/2"	10"
#7	1'-2"	7"	7"	5 1/4"	12"
#8	1'-4"	8"	8"	6"	14"
#9	1'-7"	11 3/4"	10 1/2"	9 1/2"	15"
#10	1'-10"	1'-1 1/4"	11 1/2"	10 3/4"	17"
#11	2'-0"	1'-2 3/4"	1'-1"	12"	19"

* COMPLYING WITH MINIMUM COVER REQUIREMENTS OF ACI 318, 12.5.3. OTHERWISE Ldh MUST BE RE-CALCULATED.

REINFORCING HOOK SCHEDULE

4 / –

NOT TO SCALE

LAP SPLICE AND EMDEDMENT LENGTHS f'c =4.0 ksi fy = 60 ksi		
BAR	BARS SPACED GREATER THAN 4"	BARS SPACED LESS THAN OR EQUAL TO 4"
#3	14"	14"
#4	19"	19"
#5	24"	30"
#6	29"	43"
#7	46"	74"
#8	60"	96"
#9	76"	122"
#10	97"	155"
#11	120"	191"

NOTES:

1. PROVIDE MINIMUM LAP SPLICE LENGTHS AND EMBEDMENTS PER TABLE UNLESS NOTED OTHERWISE. EMBEDMENT LENGTH EQUALS THE LAP SPLICE LENGTH UNLESS OTHERWISE NOTED.

2. BAR SPACING AT LAP SPLICE IS THE MINIMUM CLEAR DISTANCE BETWEEN LAPPED BARS PLUS ONE BAR DIAMETER.

3. ALL SPLICES TO BE CONTACT SPLICES AND WIRED TOGETHER UNLESS OTHERWISE APPROVED BY ENGINEER.

CONCRETE REINFORCING LAP AND EMBEDMENT SCHEDULE

5 / –

NOT TO SCALE

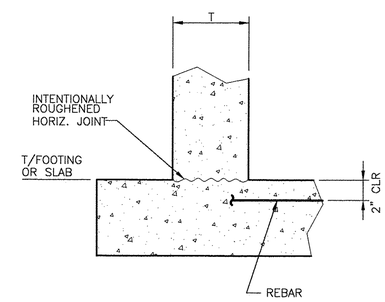

WALL/SLAB

CONSTRUCTION JOINT (CJ)

6 / –

NOT TO SCALE

Concord NORTH CAROLINA High Performance Living

HDR

ISSUE	DATE	DESCRIPTION
1	9/6/16	ISSUED FOR CONSTRUCTION

PROJECT MANAGER	
PROJECT MANAGER	PB
CHECKED BY	RG
DRAWN BY	TM
PROJECT NUMBER	219915

NORTH CAROLINA PROFESSIONAL ENGINEER SEAL 027764 MICHAEL TEPEDINO 4/29/16

CITY OF CONCORD STORMWATER SERVICES
ALFRED M. BROWN OPERATIONS CENTER
850 Warren C. Coleman Blvd.
Concord, North Carolina 28026-0308

ZEMOSA ACRES CULVERT REPLACEMENT
STRUCTURAL NOTES & SECTIONS

0 1" 2"

FILENAME 00S-06.dwg
SCALE NOT TO SCALE

SHEET **00S-06**