CITY OF CONCORD
CONCORD, NORTH CAROLINA

KILLARNEY AVENUE RECONSTRUCTION
TRANSPORTATION FUND ACCOUNT #XXXX-XXXXX

CONSTRUCTION SEQUENCE

1. CONTRACTOR TO COORDINATE WITH BUSINESSES AND CHURCH TO ENSURE SUFFICIENT ACCESS IS MAINTAINED AT ALL TIMES DURING PROJECT.

2. CONTRACTOR SHALL ENSURE THAT ALL NECESSARY PERMITS HAVE BEEN RECEIVED AND THAT THOSE REQUIRED TO BE DISPLAYED ON-SITE ARE AVAILABLE.

3. CONTRACTOR SHALL HOLD PRE-CONSTRUCTION MEETING AT LEAST 48 HOURS BEFORE THE ACTUAL START OF CONSTRUCTION.

4. CONTRACTOR SHALL CONTACT CAROLINA ONE CALL AND ALL ENTITIES HAVING BURIED UTILITIES AT LEAST 72 HOURS PRIOR TO DIGGING OR AS DIRECTED AT THE PRE-CONSTRUCTION MEETING.

5. CONTRACTOR SHALL MAINTAIN TRAFFIC AND SAFETY CONTROL MEASURES AT ALL TIMES ON THE PROJECT.

6. CONTRACTOR SHALL INSTALL TEMPORARY CONSTRUCTION ENTRANCES (IF ANY) AT EACH POINT OF ACCESS TO STORAGE AND CONSTRUCTION AREAS.

7. SEDIMENT AND EROSION CONTROL MEASURES SHALL BE INSTALLED IN ACCORDANCE WITH PLANS AND BEFORE STARTING WORK.

8. CONTRACTOR SHALL CLEAR RIGHT-OF-WAY IF NECESSARY.

9. STOCKPILE RIP-RAP ON SITE AND INSTALL ALL OTHER EROSION CONTROL MEASURES WHERE THE WORK IS OCCURRING. THE CONTRACTOR SHALL NOT INSTALL EROSION CONTROL MEASURES IN AREAS WHERE THE WORK WILL NOT OCCUR FOR SOME TIME. ADDITIONAL EROSION CONTROL MEASURES MAY BE REQUIRED BY THE TRANSPORTATION DIRECTOR OR HIS DESIGNATED REPRESENTATIVE OR UPON RECOMMENDATION OF NC DENR PERSONNEL AS CONDITIONS WARRANT.

10. IN AREAS WHERE IT IS NOT FEASIBLE TO INSTALL EROSION CONTROL DEVICES, ALL DISTURBED AREAS MUST BE SEEDED AND MULCHED BY THE CONTRACTOR WITHIN THREE DAYS OF INITIAL DISTURBANCE. TEMPORARY SEEDING SHALL BE REQUIRED ON ALL OTHER AREAS TO BE DISTURBED FOR A PERIOD OF 10 DAYS OR LONGER.

11. UPON COMPLETION OF THE INSTALLATION AND WITH APPROVAL OF NC DENR-DLR, ALL EROSION CONTROL DEVICES EXCEPT FOR CREEK/STREAM BANK STABILIZATION SHALL BE REMOVED AND DISPOSED OF IN AN ACCEPTABLE MANNER. EACH SECTION SHALL BE SEEDED AT EARLIEST POSSIBLE DATE AFTER INSTALLATION OF PIPE, STRUCTURE, OR ACCESS.

12. ONCE GROUND COVER IS FIRMLY ESTABLISHED, ALL TEMPORARY EROSION CONTROL MEASURES SHALL BE REMOVED WITH THE APPROVAL OF NC DENR-DLR.

13. CONTRACTOR SHALL COORDINATE ALL WATER SYSTEM BLOW-OFFS AND TESTING WITH THE CITY ENGINEERING DEPARTMENT'S CONSTRUCTION ADMINISTRATOR AT LEAST 24 HOURS IN ADVANCE OF SUCH WORK. NOTIFY THE RESPONSE AREA FIRE DEPARTMENT IF EXISTING SYSTEM VALVES NEED TO BE SHUT OFF IN THE COURSE OF THE WORK.

14. CONTRACTOR SHALL REFERENCE SPECIAL CONDITIONS FOR JOB SEQUENCE AND OTHER DIRECTIONS, IF ANY. CONTRACTOR SHALL COORDINATE CONSTRUCTION ACTIVITY WITH THE CITY.

GENERAL NOTES

1. ALL MATERIALS, EQUIPMENT, LABOR, AND WORKMANSHIP IS TO BE IN ACCORDANCE WITH AND SUBJECT TO THE WATER AND SEWER AUTHORITY OF CABARRUS COUNTY'S STANDARD SPECIFICATIONS; THE CITY OF CONCORD'S ORDINANCES, POLICIES, AND STANDARD SPECIFICATIONS, AND THE NORTH CAROLINA ADMINISTRATIVE CODE FOR WASTEWATER COLLECTION AND WATER DISTRIBUTION SYSTEMS, AND NCDOT STANDARD SPECIFICATIONS AND NCDOT STANDARD DRAWINGS. IN THE EVENT OF CONFLICT BETWEEN THE WATER AND SEWER AUTHORITY OF CABARRUS COUNTY'S STANDARD SPECIFICATION; THE CITY OF CONCORD'S ORDINANCES, POLICIES, AND STANDARD SPECIFICATIONS; THE NORTH CAROLINA ADMINISTRATIVE CODE, NCDOT STANDARD SPECIFICATIONS AND NCDOT STANDARD DRAWINGS, THE MORE RESTRICTIVE REQUIREMENTS SHALL APPLY.

2. ALL SEDIMENT AND EROSION CONTROL MEASURES SHALL CONFORM TO THE LATEST STANDARDS OF THE N.C. SEDIMENTATION POLLUTION CONTROL ACT AND APPLICABLE LOCAL AND FEDERAL REQUIREMENTS.

3. CONTRACTOR SHALL NOTIFY THE TRANSPORTATION DIRECTOR OR HIS DESIGNATED REPRESENTATIVE AT LEAST 48 HOURS IN ADVANCE OF BEGINNING WORK.

4. INDIVIDUAL WATER, GAS, SEWER, TELEPHONE, AND CABLE SERVICES MAY OR MAY NOT BE SHOWN ON THE PLANS. CONTRACTOR TO CONTACT APPROPRIATE AGENCY FOR FIELD LOCATIONS.

5. CITY OF CONCORD ELECTRIC, WATER, AND SEWER DEPARTMENT PERSONNEL WILL ASSIST THE CONTRACTOR IN LOCATING ALL CITY OF CONCORD UTILITY SERVICES AND LINES.

6. IF MAILBOX PULL-OFF AREAS ARE DISTURBED, CRUSHED STONE STABILIZER SHALL BE PLACED WITH SUFFICIENT LENGTH TO ACCOMMODATE VEHICULAR TRAFFIC. THESE AREAS SHALL BE MAINTAINED FOR THE ONE-YEAR WARRANTY PERIOD. THE COST OF THESE ITEMS SHALL BE INCLUDED IN THE COST OF LAYING PIPE.

7. THIS PROJECT IS NOT SUBJECT TO 100 YEAR FLOOD.

8. FIRE HYDRANT EXTENSIONS, IF NEEDED, SHALL BE INCLUDED IN THE COST OF THE HYDRANT INSTALLATION.

9. GATE OR BUTTERFLY VALVES, BLOW-OFFS, AND FIRE HYDRANTS MAY BE FIELD ADJUSTED 50 FEET IN EITHER DIRECTION WITH THE PERMISSION OF THE ENGINEERING AND WATER RESOURCES DEPARTMENTS.

RIGHT-OF-WAY NOTES

1. RIGHT-OF-WAY LINES AND PROPERTY LINES ARE SHOWN ON THE DESIGN DRAWINGS AND ARE FOR REFERENCE ONLY. FOR EXACT LOCATIONS REFER TO THE SURVEY PLATS BY THE CITY OF CONCORD'S CONSULTING REGISTERED LAND SURVEYOR OR BY THE CITY SURVEYOR.

2. ALL CONSTRUCTION AND GRADING TO REMAIN WITHIN THE EXISTING RIGHT OF WAY LIMITS. IF FIELD CONDITIONS WARRANT ANY WORK OUTSIDE OF THE RIGHT OF WAY, CONTRACTOR IS TO COORDINATE WITH THE CITY OF CONCORD TRANSPORTATION DEPARTMENT PRIOR TO COMPLETING WORK.

TRAFFIC CONTROL

1. THE CONTRACTOR SHALL BE RESPONSIBLE AT ALL TIMES FOR WORK ZONE TRAFFIC SAFETY AND CONTROL.

2. ALL WORK ZONE TRAFFIC CONTROL DEVICES AND OPERATIONS USED ON STREET AND HIGHWAY CONSTRUCTION, MAINTENANCE, UTILITY OR INCIDENT MANAGEMENT SHALL CONFORM TO THE APPLICABLE SPECIFICATIONS IN THE LATEST EDITION OF THE MANUAL ON UNIFORM TRAFFIC CONTROL DEVICES FOR STREETS AND HIGHWAYS (MUTCD).

3. ALL TRAFFIC/SAFETY CONTROL DEVICES SHALL BE IN GOOD REPAIR AND SHALL BE POSITIONED AT ALL TIMES IN THE APPROPRIATE LOCATIONS FOR THE WORK OPERATION. THE CONTRACTOR SHALL CAREFULLY MONITOR SITE CONDITIONS SUCH AS LIGHT, WEATHER, TRAFFIC VOLUME, ETC. TO ENSURE THAT ALL TRAFFIC/SAFETY CONTROL MEASURES ARE OPERATING EFFECTIVELY.

4. THE CONTRACTOR SHALL PREPARE A PROPOSAL ON THE TRAFFIC CONTROL OPERATIONS AND PRESENT THEM TO THE CITY OF CONCORD'S TRANSPORTATION DEPARTMENT @ 920-5362 AT LEAST 48 HOURS BEFORE BEGINNING WORK.

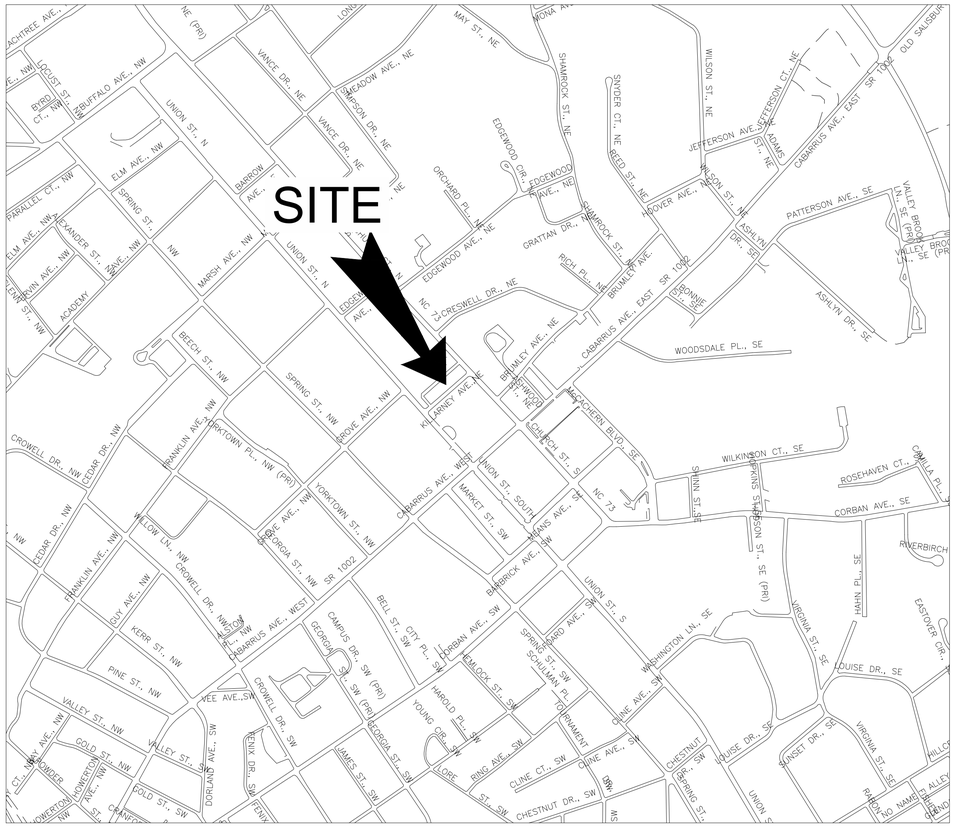

VICINITY MAP
SCALE: 1" = 500'

LEGEND

PROPOSED	EXISTING	
		Building
		Pavement
		Sidewalk
		Curb
000	000	Contours
		Sign
		Benchmark
	SAN	Sanitary Service
	STM	Storm Service
	WM	Water Main
	C	Communication Line
	FO	Fiber Optic
	GM	Gas Service Line
	E	Underground Electric Line
	OHE	Overhead Electric Line
	OHW	Overhead Utility Wire
		Light Pole
		Water Valve
		Fire Hydrant
	C/O	Sanitary Cleanout
		Sanitary Manhole
		Trees/Shrubs
		8" Reinforced Concrete
		4' Concrete Sidewalk
		6" Concrete Driveway
00.00 ×		Prop. Elev. Back of Curb
ME 00.00 ×		Prop. Elev. Match Existing
FG 00.00 ×		Prop. Elev. Finish Grade
FOC 00.00 ×		Prop. Elev. Face of Curb
RIM 00.00 ×		Prop. Rim Elev. (See Detail This Sheet)
F		Flush Curb
M		Modified Height Curb

DRAWING INDEX

COVER SHEET
SHEET 2 EXISTING CONDITIONS AND DEMOLITION PLAN
SHEET 3 PROPOSED SITE PLAN
SHEET 4 PROPOSED GRADING PLAN
SHEET 5 DETAILS

Concord NORTH CAROLINA High Performance Living

PREPARED BY
TRANSPORTATION DEPARTMENT
CITY OF CONCORD
P.O. BOX 308
CONCORD N.C. 28026
(704) 920-5362

NOT FOR CONSTRUCTION FOR QUOTE PURPOSES ONLY

REV. #	DATE	DESCRIPTION	BY

C:\transportation - streets dot\city streets\streets\streets - subdivisions beginning k\killarney ave - reconstruct\KILLARNEY-COVER SHEET.dwg Aug 22, 2018 - 3:01pm

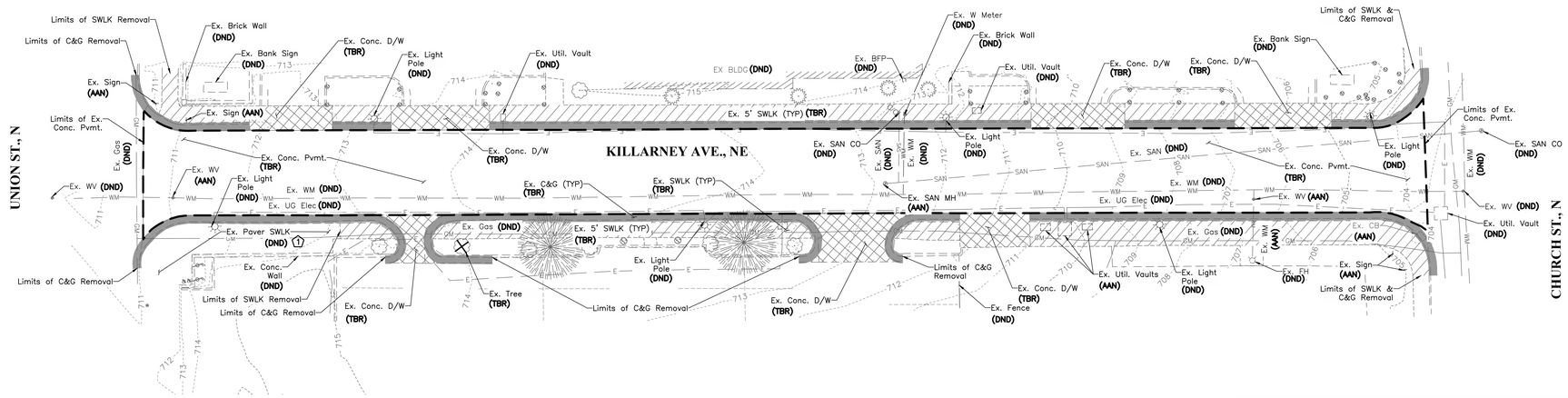

PLAN
SCALE: 1" = 20'

KEY NOTES

1 Disturbance of brick pavers to be minimized for removal and installation of curbing and WCR. Pavers to be reinstalled where disturbed for curbing removal.

NOTES

1. Contractor to exercise extreme care to not disturb/damage existing decorative light poles.
2. Removal/disturbance of existing landscaping and foliage to be minimized. If necessary root systems shall be saw cut to avoid excess damage to established shrubbery and trees prior to demolition.
3. All underground utility locations shown are approximate. The contractor is responsible for field locating all utilities.
4. While all efforts have been made to identify all utilities in the area, the presence of unidentified/unlocated utilities is possible.
5. The contractor shall immediately report to the Director or the Designated Representative any discrepancies found between actual field conditions and construction documents and shall wait for instruction prior to proceeding.
6. Contractor shall ensure access to the Wells Fargo Bank and the Central United Methodist Church parking lots throughout the project.

LEGEND

EXISTING

- Contours
- Building
- Curb
- Fence
- Sign
- Flag pole
- Tree(s)
- STM — Storm Service
- Catch Basin
- SAN — Sanitary Service
- Sanitary Cleanout
- Sanitary Manhole
- WM — Watermain
- Fire hydrant
- Water Valve
- E — Underground Electric Line
- OHE — Overhead Electric Line
- OHW — Overhead Utility Wire
- Light Pole
- GM — Gas Service Line

DEMOLITION

- Curb, to be Removed and Disposed
- Pavement Removal Limits
- Tree to be Removed
- Concrete Driveway to be Removed
- Sidewalk to be Removed

TBR	To be Removed
AAN	Adjust as Needed
DND	Do Not Disturb

PROTECTION OF EXISTING UTILITIES

THE CONTRACTOR SHALL CONTACT THE APPROPRIATE AGENCY FOR THE EXACT FIELD LOCATIONS OF ALL WATER, SEWER, ELECTRIC, TELEPHONE, TELEVISION AND ANY OTHER UNDERGROUND AND OVERHEAD UTILITY BEFORE STARTING CONSTRUCTION. THE OMISSION FROM OR THE INCLUSION OF UTILITY LOCATIONS ON THE CONTRACT DRAWINGS IS NOT TO BE CONSIDERED AS THE NONEXISTENCE OF OR A DEFINITE LOCATION OF EXISTING UTILITIES. IT SHALL BE THE RESPONSIBILITY OF THE CONTRACTOR TO VERIFY THE LOCATION AND DEPTH OF ALL UNDERGROUND UTILITIES ALONG THE ROUTE OF WORK.

THE FOLLOWING LISTING OF UTILITY COMPANIES (WHICH MAY OR MAY NOT BE COMPLETE) MAY HAVE EXISTING UNDERGROUND OR OVERHEAD UTILITIES IN THE CONTRACT VICINITY.

COMPANY NAME	OFFICE	AFTER HOURS EMERGENCY
Amtrak	N/A	1.800.331.0008
AT&T	1.678.627.5335	1.800.252.1133
Cabarrus County Emergency Mgmt	704.920.2143	704.920.3000
Carolina Water – Utilities Inc. (Zemosa Acres)	704.525.7990	704.525.7990
City of Concord Electric Systems	704.920.5315	704.920.5555
City of Concord Emergency Mgmt	704.920.5528	704.920.5555
Colonial Pipeline Company	704.392.8610	704.392.8610
CSX Railroad	N/A	1.800.232.0144
Duke Energy	1.800.769.3766	1.800.769.3766
NC Dept. of Transportation	704.982.0104	704.986.3700 Standy Co Comm
NC One Call Center Area Rep	1.336.855.5760	1.800.632.4949
Norfolk Southern Railway	N/A	1.800.453.3530
North Carolina Railroad Company	919.954.7601	N/A
Piedmont Natural Gas (fka NCNG)	704.364.3120	1.800.752.7504
Plantation Pipeline	N/A	1.800.510.5678
PSNC Energy Concord	704.723.4310	1.877.776.2427
Sprint Embarq	N/A	1.888.723.8010
Time Warner Cable Concord	704.378.2856	704.378.2626 Option 5, 2, 1
Union Power	N/A	1.800.922.6849
UtiliQuest Locator Concord	704.864.8333	1.800.632.4949 NC One Call
Water & Sewer Authority of Cabarrus Co.	704.786.1783	704.788.4144 R&BWWTP
Windstream	704.722.2000	1.800.800.6609

NOTE: SOME OF THE ABOVE COMPANIES DO NOT SUBSCRIBE TO CAROLINA ONE CALL (FORMERLY ULOCO)

NORTH CAROLINA ONE CALL 1–800–632–4949

811 Know what's below. Call before you dig.
North Carolina One-Call Center, Inc.

Call 1-800-632-4949 before you dig: It's the law!

By law, everyone MUST contact the North Carolina One-Call Center, 1-800-632-4949, at least 48 hours but no more than 10 working days (excluding weekends and legal holidays) before beginning ANY digging project.

Concord NORTH CAROLINA High Performance Living

PREPARED BY
TRANSPORTATION DEPARTMENT
CITY OF CONCORD
P.O. BOX 308
CONCORD N.C. 28026
(704) 920-5362

NOT FOR CONSTRUCTION FOR QUOTE PURPOSES ONLY

KILLARNEY AVE RECONSTRUCTION
EXISTING CONDITIONS AND DEMOLITION PLAN
TRANSPORTATION FUND ACCOUNT #

REV. #	DATE	DESCRIPTION	BY

DESIGNED BY: DH
DRAWN BY: DH
CHECKED BY: PG
SCALE: AS SHOWN
DATE: 08/22/2016
PROJECT NUMBER:
SHEET: 2 OF: 5

O:\transportation - streets division\city streets system\city streets files\streets - explorations beginning k - o\streets beginning k\killarney ave - revised files\KILLARNEY-EX CONDDESIGN-PLAN Jeff Jeff Aug 22, 2016 - 3:01pm

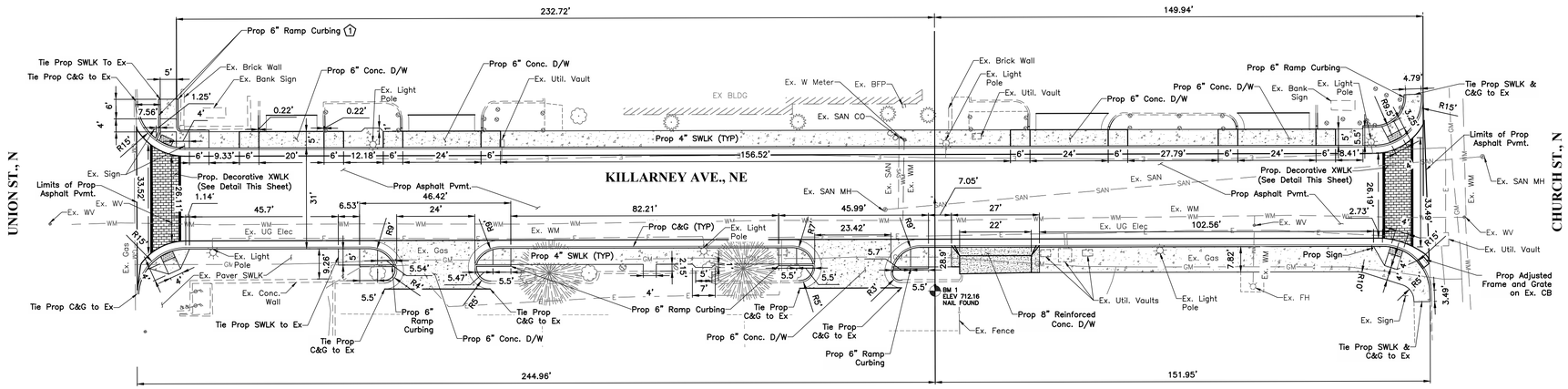

PLAN
SCALE: 1" = 20'

(1) NOTE:
6" WIDE CURBING TO BE USED ALONG SIDES OF RAMPS. SEE GRADING PLAN FOR ELEVATIONS. WIDTH TO BE ADJUSTED AS NECESSARY WHERE EXISTING BRICK WALL IS PRESENT.

NOTES

1. SIDEWALK IS 5' WIDE UNLESS OTHERWISE NOTED.
2. CONTRACTOR IS RESPONSIBLE FOR SETTING GRADE STAKES REQUIRED FOR CURB AND GUTTER INSTALLATION.
3. CONTRACTOR IS RESPONSIBLE FOR PROVIDING ALL NECESSARY TRAFFIC CONTROL MEASURES ACCORDING TO THE MUTCD MANUAL.
4. CONTRACTOR IS RESPONSIBLE FOR ADJUSTING ALL WATER METERS, VALVES, MANHOLE COVERS AND OTHER AT GRADE UTILITY STRUCTURES TO MATCH PROP. FINISHED GRADE.
5. CONTRACTOR SHALL COORDINATE WITH UTILITY PROVIDERS FOR ANY NECESSARY UTILITY RELOCATIONS.
6. CONTRACTOR IS RESPONSIBLE FOR, AND SHALL COORDINATE WITH THE DIRECTOR OR DESIGNATED REPRESENTATIVE FOR THE RELOCATION OF STREET BLADES AND TRAFFIC SIGNS WHERE NECESSARY.
7. CONTRACTOR SHALL MAKE ALL EFFORTS TO POUR CURB AND GUTTER IN AS FEW CONTINUOUS PASSES AS POSSIBLE TO ENSURE MINIMAL PONDING IN GUTTERS.

GRADING NOTES

1. All contours and spot elevations reflect finished grades.
2. The contractor shall immediately report to the Director or the Designated Representative any discrepancies found between actual field conditions and construction documents and shall wait for instruction prior to proceeding.
3. The contractor shall blend new earthwork smoothly to transition back to existing grade, including any grading work performed outside of the right-of-way.
4. Limits of clearing shown on grading plan are based upon the approximate cut and fill slope limits, or other grading requirements.
5. The contractor shall insure positive drainage so that runoff will drain by gravity flow across new pavement areas to new or existing drainage inlets or sheet overland.
6. There shall be no standing water before permanent seeding of parcels.
7. Sediment and erosion control measures shall be maintained throughout this project as indicated in the contract documents and/or shown on the plans.

ADA NOTES

ADA ACCESSIBLE ROUTE INSTRUCTIONS TO CONTRACTOR

Contractors shall exercise appropriate care and precision in construction of ADA accessible components indicated in these plans. These components, as constructed, must comply with State and Federal accessibility rules and regulations. Finished surfaces along the accessible route of travel from parking space, public transportation, pedestrian access, inter-building access, to points of accessible building entrance/egress, shall comply with ADA & NC building code requirements. These include, but are not limited to the following:

Parking spaces and parking aisles – slope shall not exceed 2.0% in any direction.
Curb ramps – slope shall not exceed 8.3% for a maximum of six (6) feet.
Landings – shall be provided at each end of ramps, shall provide positive drainage, and shall not exceed 2.0% slope in any direction.
Path of travel along accessible route – shall provide a 36 inch or greater unobstructed width of travel, (car overhangs cannot reduce this minimum width), the slope shall be no greater than 5.0% in the direction of travel, and shall not exceed 2.0% in cross slope.

EROSION CONTROL NOTES

1) CONTRACTOR IS RESPONSIBLE FOR PROVIDING ALL NECESSARY EROSION CONTROL MEASURES.
2) CONTRACTOR SHALL PROVIDE SEEDING AND MULCHING AS THE WORK PROGRESSES.
3) INLET PROTECTION TO BE USED ON ALL EXISTING STORM DRAINAGE STRUCTURES.
4) INLET PROTECTION TO BE USED AS PROPOSED PIPING IS INSTALLED.
5) SEE EROSION CONTROL DETAIL SHEET FOR DETAILED NOTES.

PROTECTION OF EXISTING UTILITIES

THE CONTRACTOR SHALL CONTACT THE APPROPRIATE AGENCY FOR THE EXACT FIELD LOCATIONS OF ALL WATER, SEWER, ELECTRIC, TELEPHONE, TELEVISION AND ANY OTHER UNDERGROUND AND OVERHEAD UTILITY BEFORE STARTING CONSTRUCTION. THE OMISSION FROM OR THE INCLUSION OF UTILITY LOCATIONS ON THE CONTRACT DRAWINGS IS NOT TO BE CONSIDERED AS THE NONEXISTENCE OF OR A DEFINITE LOCATION OF EXISTING UTILITIES. IT SHALL BE THE RESPONSIBILITY OF THE CONTRACTOR TO VERIFY THE LOCATION AND DEPTH OF ALL UNDERGROUND UTILITIES ALONG THE ROUTE OF WORK.

THE FOLLOWING LISTING OF UTILITY COMPANIES (WHICH MAY OR MAY NOT BE COMPLETE) MAY HAVE EXISTING UNDERGROUND OR OVERHEAD UTILITIES IN THE CONTRACT VICINITY.

COMPANY NAME	OFFICE	AFTER HOURS EMERGENCY
Amtrak	N/A	1.800.331.0000
AT&T	1.678.627.5335	1.800.252.1133
Cabarrus County Emergency Mgmt	704.920.2143	704.920.3000
Carolina Water – Utilities Inc. (Zemosa Acres)	704.525.7990	704.525.7990
City of Concord Electric Systems	704.920.5315	704.920.5555
City of Concord Emergency Mgmt	704.920.5528	704.920.5555
Colonial Pipeline Company	704.392.8610	704.392.8610
CSX Railroad	N/A	1.800.232.0144
Duke Energy	1.800.769.3766	1.800.769.3766
NC Dept. of Transportation	704.982.0104	704.986.3700 Stanly Co Comm
NC One Call Center Area Rep	1.336.855.5760	1.800.632.4949
Norfolk Southern Railway	N/A	1.800.453.2530
North Carolina Railroad Company	919.954.7601	N/A
Piedmont Natural Gas (fka NCNG)	704.364.3120	1.800.752.7504
Plantation Pipeline	N/A	1.800.510.5678
PSNC Energy Concord	704.723.4310	1.877.776.2427
Sprint Embarq	N/A	1.888.723.8010
Time Warner Cable Concord	704.378.2856	704.378.2626 Option 5, 2, 1
Union Power	N/A	1.800.922.6840
UtiliQuest Locator Concord	704.864.8333	1.800.632.4949 NC One Call
Water & Sewer Authority of Cabarrus Co.	704.786.1783	704.788.4164 RRWWTP
Windstream	704.722.2000	1.800.800.6609

NOTE: SOME OF THE ABOVE COMPANIES DO NOT SUBSCRIBE TO CAROLINA ONE CALL (FORMERLY ULOCO)
NORTH CAROLINA ONE CALL 1-800-632-4949

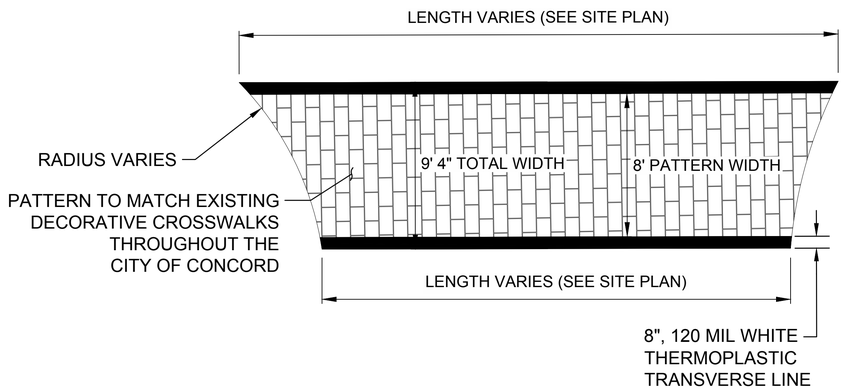

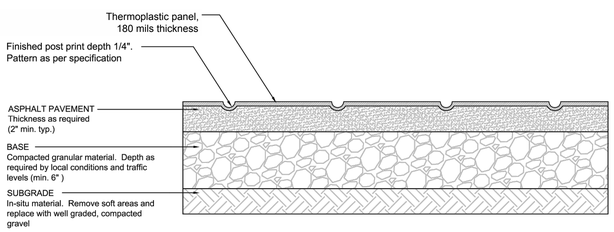

AGGREGATE REINFORCED PREFORMED THERMOPLASTIC DECORATIVE ASPHALT CROSSWALK DETAIL

NOT TO SCALE

LEGEND

PROPOSED | EXISTING

- Building
- Pavement
- Sidewalk
- Curb
- Fence
- Sign
- Benchmark
- Sanitary Service
- Storm Service
- Water Main
- Communication Line
- Fiber Optic
- Gas Service Line
- Underground Electric Line
- Overhead Electric Line
- Overhead Utility Wire
- Light Pole
- Water Valve
- Fire Hydrant
- Sanitary Cleanout
- Sanitary Manhole
- Trees/Shrubs
- 8" Reinforced Concrete
- 4' Concrete Sidewalk
- 6" Concrete Driveway
- Aggregate Reinforced Preformed Thermoplastic Decorative Asphalt Crosswalk (See Contract for specifications) with 8" Thermoplastic Lines (See Detail This Sheet)

Concord NORTH CAROLINA High Performance Living

PREPARED BY
TRANSPORTATION DEPARTMENT
CITY OF CONCORD
P.O. BOX 308
CONCORD N.C. 28026
(704) 920-5362

NOT FOR CONSTRUCTION FOR QUOTE PURPOSES ONLY

KILLARNEY AVE RECONSTRUCTION PROPOSED SITE PLAN

TRANSPORTATION FUND ACCOUNT #

REV. #	DATE	DESCRIPTION	BY

DESIGNED BY: DH
DRAWN BY: DH
CHECKED BY: PG
SCALE: AS SHOWN
DATE: 8/22/16
PROJECT NUMBER:
SHEET: 3 OF: 5

O:\transportation - streets division\city streets system\city streets files\streets - subdivisions beginning k - z\streets beginning k\killarney ave - revised files\KILLARNEY-PROP-SITE-PLAN.dwg Aug 23, 2016 - 3:02pm

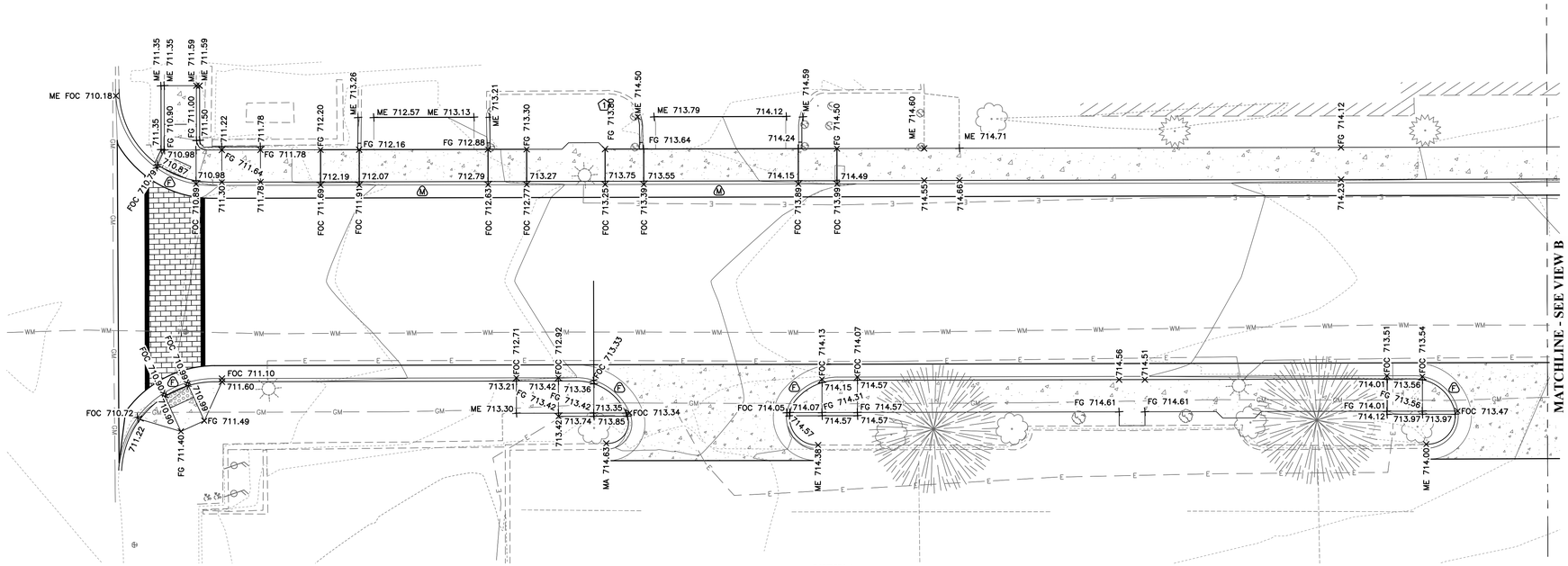

VIEW A
PLAN
SCALE: 1" = 10'

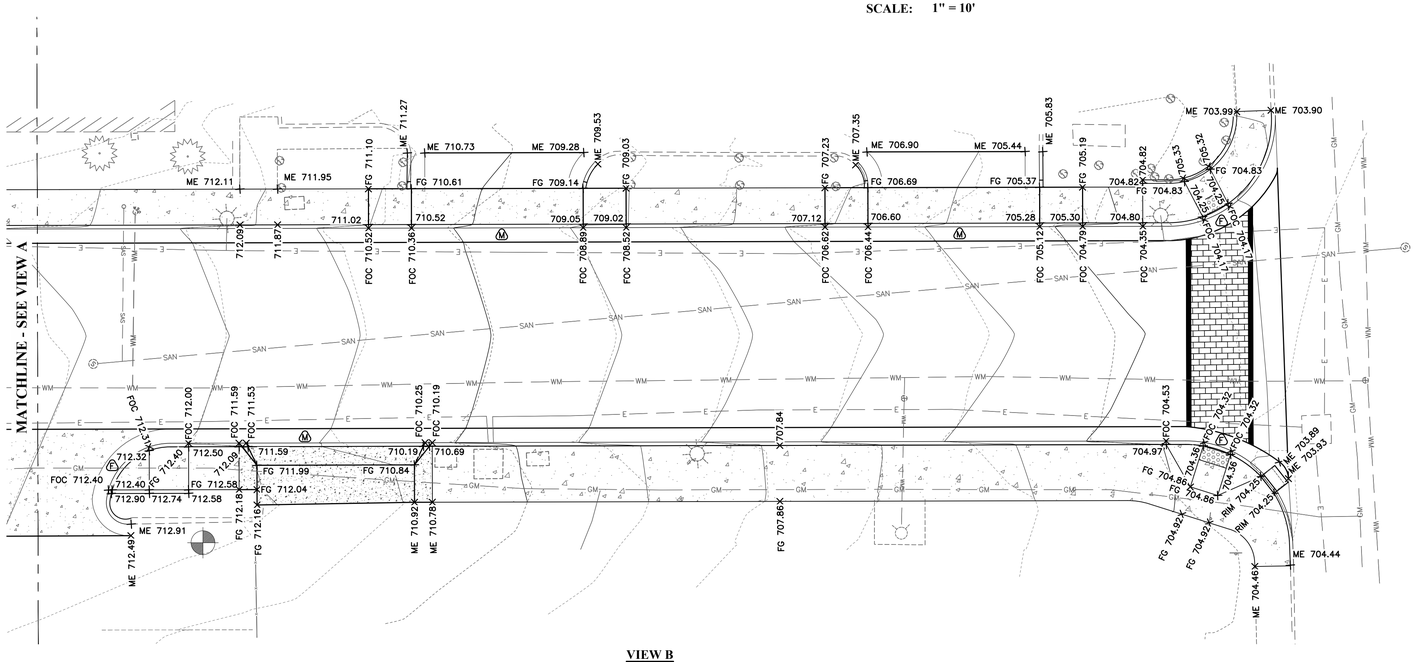

VIEW B
PLAN
SCALE: 1" = 10'

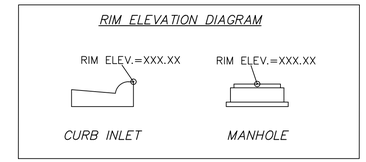

LEGEND

PROPOSED	EXISTING	
		Building
		Pavement
		Sidewalk
		Curb
000	000	Contours
		Sign
		Benchmark
	SAN	Sanitary Service
	STM	Storm Service
	WM	Water Main
	C	Communication Line
	FO	Fiber Optic
	GM	Gas Service Line
	E	Underground Electric Line
	OHE	Overhead Electric Line
	OHW	Overhead Utility Wire
		Light Pole
		Water Valve
		Fire Hydrant
	C/O	Sanitary Cleanout
		Sanitary Manhole
		Trees/Shrubs
		8" Reinforced Concrete
		4' Concrete Sidewalk
		6" Concrete Driveway
00.00		Prop. Elev. Back of Curb
ME 00.00		Prop. Elev. Match Existing
FG 00.00		Prop. Elev. Finish Grade
FOC 00.00		Prop. Elev. Face of Curb
RIM 00.00		Prop. Rim Elev. (See Detail This Sheet)
F		Flush Curb
M		Modified Height Curb

NOTES

1. SIDEWALK IS 5' WIDE UNLESS OTHERWISE NOTED.
2. CONTRACTOR IS RESPONSIBLE FOR SETTING GRADE STAKES REQUIRED FOR CURB AND GUTTER INSTALLATION.
3. CONTRACTOR IS RESPONSIBLE FOR PROVIDING ALL NECESSARY TRAFFIC CONTROL MEASURES ACCORDING TO THE MUTCD MANUAL.
4. CONTRACTOR IS RESPONSIBLE FOR ADJUSTING ALL WATER METERS, VALVES, MANHOLE COVERS AND OTHER AT GRADE UTILITY STRUCTURES TO MATCH PROP. FINISHED GRADE.
5. CONTRACTOR SHALL COORDINATE WITH UTILITY PROVIDERS FOR ANY NECESSARY UTILITY RELOCATIONS.
6. CONTRACTOR IS RESPONSIBLE FOR, AND SHALL COORDINATE WITH THE DIRECTOR OR DESIGNATED REPRESENTATIVE FOR THE RELOCATION OF STREET BLADES AND TRAFFIC SIGNS WHERE NECESSARY.
7. CONTRACTOR SHALL MAKE ALL EFFORTS TO POUR CURB AND GUTTER IN AS FEW CONTINUOUS PASSES AS POSSIBLE TO ENSURE MINIMAL PONDING IN GUTTERS.

EROSION CONTROL NOTES

1) CONTRACTOR IS RESPONSIBLE FOR PROVIDING ALL NECESSARY EROSION CONTROL MEASURES.
2) CONTRACTOR SHALL PROVIDE SEEDING AND MULCHING AS THE WORK PROGRESSES.
3) INLET PROTECTION TO BE USED ON ALL EXISTING STORM DRAINAGE STRUCTURES.
4) INLET PROTECTION TO BE USED AS PROPOSED PIPING IS INSTALLED.
5) SEE EROSION CONTROL DETAIL SHEET FOR DETAILED NOTES.

ADA NOTES

ADA ACCESSIBLE ROUTE INSTRUCTIONS TO CONTRACTOR

Contractors shall exercise appropriate care and precision in construction of ADA accessible components indicated in these plans. These components, as constructed, must comply with State and Federal accessibility rules and regulations. Finished surfaces along the accessible route of travel from parking space, public transportation, pedestrian access, inter-building access, to points of accessible building entrance/egress, shall comply with ADA & NC building code requirements. These include, but are not limited to the following:

Parking spaces and parking aisles – slope shall not exceed 2.0% in any direction.
Curb ramps – slope shall not exceed 8.3% for a maximum of six (6) feet.
Landings – shall be provided at each end of ramps, shall provide positive drainage, and shall not exceed 2.0% slope in any direction.
Path of travel along accessible route – shall provide a 36 inch or greater unobstructed width of travel, (car overhangs cannot reduce this minimum width), the slope shall be no greater than 5.0% in the direction of travel, and shall not exceed 2.0% in cross slope.

GRADING NOTES

1. All contours and spot elevations reflect finished grades.
2. The contractor shall immediately report to the Director or the Designated Representative any discrepancies found between actual field conditions and construction documents and shall wait for instruction prior to proceeding.
3. The contractor shall blend new earthwork smoothly to transition back to existing grade, including any grading work performed outside of the right-of-way.
4. Limits of clearing shown on grading plan are based upon the approximate cut and fill slope limits, or other grading requirements.
5. The contractor shall insure positive drainage so that runoff will drain by gravity flow across new pavement areas to new or existing drainage inlets or sheet overland.
6. There shall be no standing water before permanent seeding of parcels.
7. Sediment and erosion control measures shall be maintained throughout this project as indicated in the contract documents and/or shown on the plans.

811
Know what's below.
Call before you dig.
North Carolina One-Call Center, Inc.

Call 1-800-632-4949 before you dig: It's the law!

By law, everyone MUST contact the North Carolina One-Call Center, 1-800-632-4949, at least 48 hours but no more than 10 working days (excluding weekends and legal holidays) before beginning ANY digging project.

Concord
NORTH CAROLINA
High Performance Living

PREPARED BY
TRANSPORTATION DEPARTMENT
CITY OF CONCORD
P.O. BOX 308
CONCORD N.C. 28026
(704) 920-5362

NOT FOR CONSTRUCTION FOR QUOTE PURPOSES ONLY

KILLARNEY AVE RECONSTRUCTION
PROPOSED GRADING PLAN
TRANSPORTATION FUND ACCOUNT #

REV. #	DATE	DESCRIPTION	BY

DESIGNED BY: DH
DRAWN BY: DH
CHECKED BY: PG
SCALE: AS SHOWN
DATE: 08/22/2016
PROJECT NUMBER:
SHEET: 4 OF: 5

O:\transportation - streets division\city streets system\city streets files\streets - subdivisions beginning k - ostreets beginning k\killarney ave - wicopd files\KILLARNEY-PROP-GRADING-PLAN.dwg Aug 22, 2016 - 3:03pm

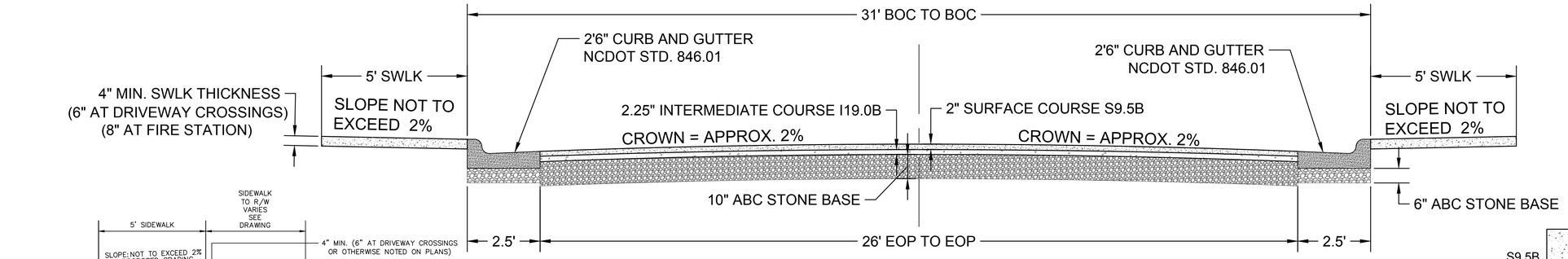

PROPOSED KILLARNEY AVE. TYPICAL SECTION

NOT TO SCALE

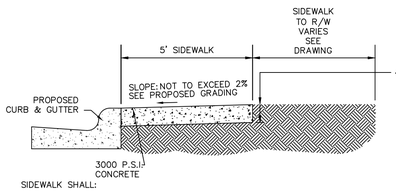

SIDEWALK SHALL:

- HAVE A MINIMUM OF FIVE (5) FEET IN WIDTH;
- BE CONSTRUCTED OF NOT LESS THAN THREE THOUSAND (3,000) PSI CONCRETE;
- BE A MINIMUM FOUR (4) INCHES THICK, EXCEPT THAT WHERE A SIDEWALK CROSSES A DRIVEWAY, IT SHALL BE SIX (6) INCHES THICK.; AND
- SHALL BE CONSTRUCTED ON AN ADEQUATELY COMPACTED AND PROPERLY GRADED BASE.
- SHALL NOT EXCEED 2% SLOPE TOWARD THE STREET. SEE PROPOSED GRADING.
- SHALL BE STEEL TROWELLED AND LIGHT BROOM FINISHED AND CURED PROPERLY. TOOLED JOINTS SHALL BE PROVIDED AT INTERVALS OF NOT MORE THAN FIVE (5) FEET AND EXPANSION JOINTS AT INTERVALS OF NOT MORE THAN FORTY (40) FEET.

SIDEWALK DETAIL

NOT TO SCALE

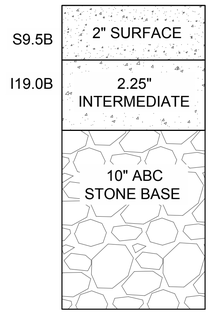

TYPICAL PAVEMENT SECTION

NOT TO SCALE

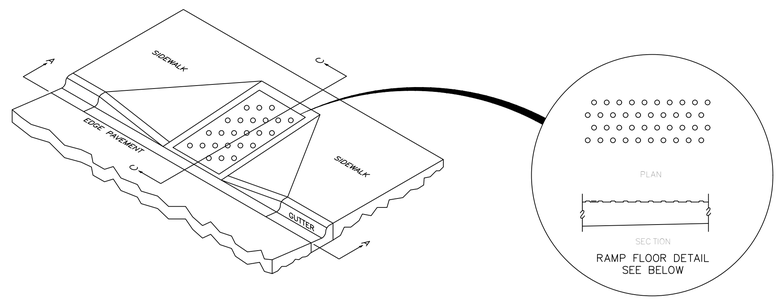

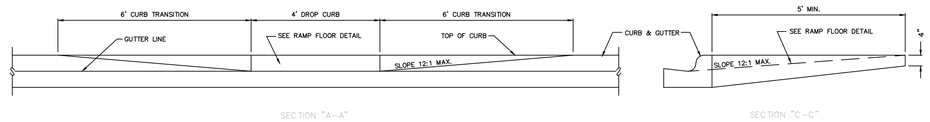

STANDARD WHEELCHAIR RAMP AT CURB CUT

NOT TO SCALE

NOTES:

1. TRUNCATED DOMES TO BE CAST IN PLACE DETECTABLE/TACTILE WARNING SURFACE TILES.
2. TILES TO BE 24"X48" BRICK RED
3. ARMOR-TILE TACTILE SYSTEMS/ENGINEERING PLASTICE INC. TILES TO BE UTILIZED IN THE CITY OF CONCORD.

STANDARD WHEELCHAIR RAMP AT CURB CUT (WITH SIDEWALK)

NOT TO SCALE

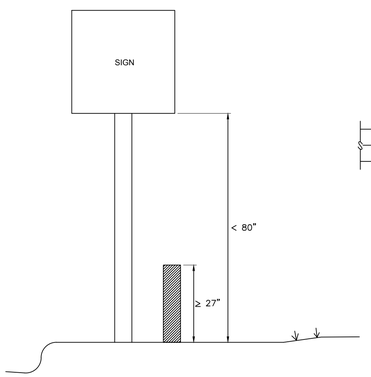

NOTES:

- IF SIGNS/POLES REMAIN IN SIDEWALK AND A PROTRUDING OBJECT IS 80" HIGH OR LOWER, A BARRIER MUST EXIST (27" MIN. HIGH).
- SIDEWALK WIDTH MAY BE REDUCED AROUND SIGN TO 36" NCAC.

SIDEWALK BARRIER DETAIL

NOT TO SCALE

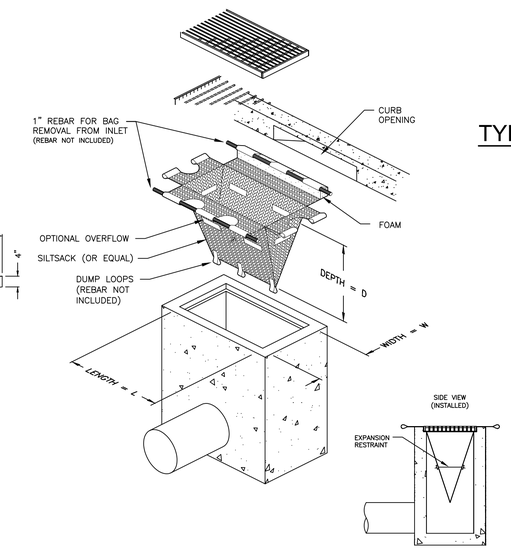

SEDIMENT CONTROL DEVICE WITH CURB DEFLECTOR

NOT TO SCALE

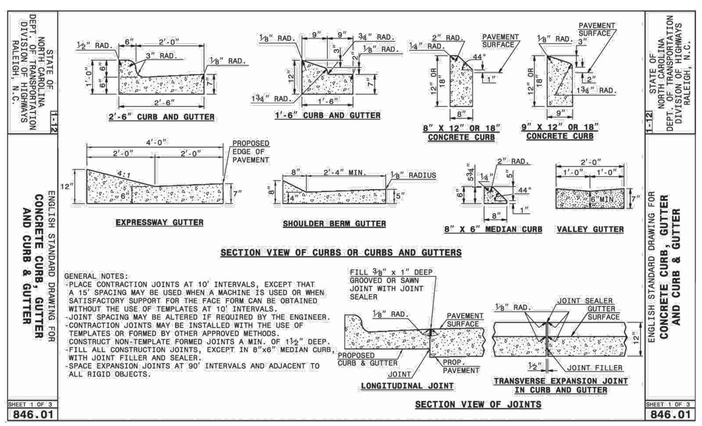

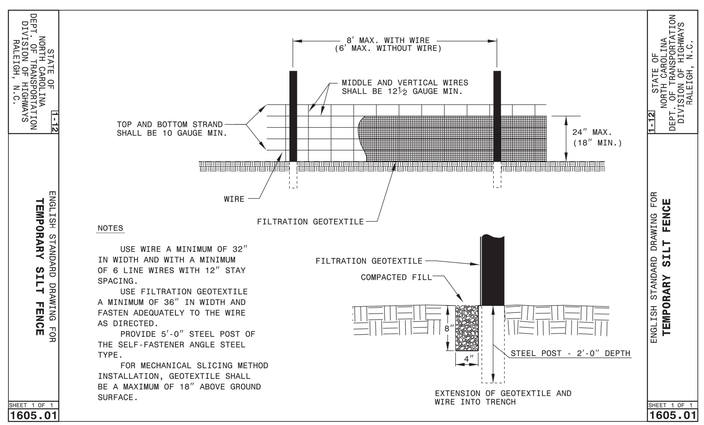

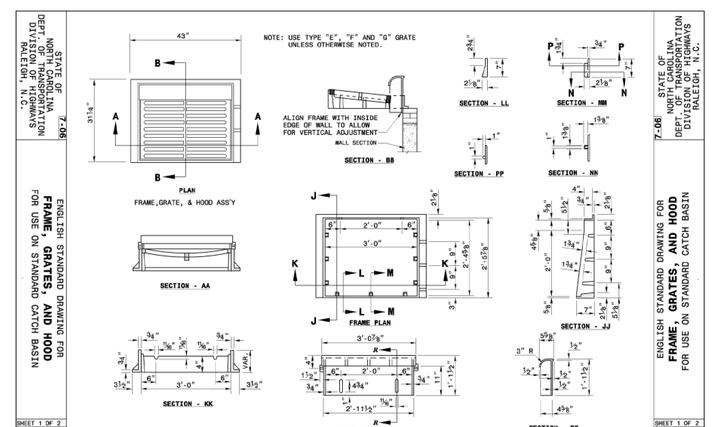

Concord
NORTH CAROLINA
High Performance Living

PREPARED BY
TRANSPORTATION DEPARTMENT
CITY OF CONCORD
P.O. BOX 308
CONCORD N.C. 28026
(704) 920-5362

NOT FOR CONSTRUCTION FOR QUOTE PURPOSES ONLY

KILLARNEY AVE RECONSTRUCTION
DETAILS
TRANSPORTATION FUND ACCOUNT #

BY	DESCRIPTION

DESIGNED BY: DH
DRAWN BY: DH
CHECKED BY: PG
SCALE: AS SHOWN
DATE: 08/22/2016
PROJECT NUMBER:
SHEET: 5 OF: 5

O:\transportation - streets division\city streets system\city streets files\streets - subdivisions\beginning k - cottonwood\killarney ave - recon\files\KILLARNEY DETAILS.dwg Aug 22, 2016 - 3:03pm