Project Manual For:

Concord City Hall

Concord, NC

Early Site and Foundation
June 6, 2014
Project Number **13065**

adwarchitects
environmentsforlife

architecture planning interiors

suite 270
101 w. worthington avenue
charlotte, nc 28203

704 379 1919 tel
704 379 1920 fax

adwarchitects.com

Division 00 – Procurement and Contracting Requirements

SECTION 00 01 10 – TABLE OF CONTENTS

CONCORD CITY HALL
Concord, NC
ADW Project Number: 13065

DIVISION 00	**- PROCUREMENT AND CONTRACTING REQUIREMENTS**
Section 00 01 01	- Project Title Page
Section 00 01 10	- Table of Contents
Section 00 01 15	- List of Drawings
Section 00 31 32	- Geotechnical Data
Section 00 72 00	- General Conditions of the Contract for Construction – 2007 AIA Document A201
Section 00 73 00	- Supplementary General Conditions
DIVISION 01	**- GENERAL REQUIREMENTS**
Section 01 10 00	- Summary of Work
Section 01 21 00	- Allowances
Section 01 22 00	- Unit Prices
Section 01 23 00	- Alternates
Section 01 25 00	- Product Substitutions – Prior to Bid
Section 01 25 13	- Product Substitutions – Post Bid
Section 01 29 13	- State and County Tax Form
Section 01 31 00	- Project Management and Coordination
Section 01 32 00	- Construction Progress Documentation
Section 01 33 00	- Submittal Procedures
	- ADW Electronic Machine-Readable File Release Form
Section 01 40 00	- Quality Requirements
Section 01 42 00	- References
Section 01 45 29	- Testing Laboratory Services
Section 01 50 00	- Temporary Facilities and Controls
Section 01 58 00	- Project Identification
Section 01 60 00	- Product Requirements
Section 01 73 00	- Execution Requirements
Section 01 73 29	- Cutting and Patching
Section 01 77 00	- Closeout Procedures
DIVISION 02	**- EXISTING CONDITIONS**
Section 02 41 19	- Selective Structure Demolition
Section 02 80 00	- PSI - Sub-Slab Vapor Mitigation System Option A
Section 02 80 00	- PSI - Sub-Slab Vapor Mitigation System Option B (Alternate #3)
DIVISION 03	**- CONCRETE**
Section 03 15 00	- Hydrophilic Waterstop
Section 03 30 00	- Cast-in-place Concrete

DIVISION 04 **- MASONRY**

Section 04 20 00 - Unit Masonry

DIVISION 07 **- THERMAL AND MOISTURE PROTECTION**

Section 07 14 16 - Fluid-Applied Waterproofing
Section 07 62 00 - Sheet Metal Flashing and Trim

DIVISION 22 **-PLUMBING**

Section 22 05 00 Plumbing General
Section 22 05 03 Plumbing Pipe, Tube and Fittings
Section 22 05 23 General Duty Valves for Plumbing Piping
Section 22 11 13 Facility Water Distribution Piping
Section 22 13 13 Facility Sanitary Sewers

DIVISION 26 **-ELECTRICAL**

Section 26 05 33 RACEWAY AND BOXES FOR ELECTRICAL SYSTEMS

DIVISION 31 **- EARTHWORK**

Section 31 10 00 Site Clearing
Section 31 20 00 Earth Moving
Section 31 23 19 Dewatering
Section 31 31 00 Soil Treatment
Section 31 50 00 Excavation Support and Protection

DIVISION 32 **- EXTERIOR IMPROVEMENTS**

Section 32 12 16 Asphalt Paving
Section 32 13 13 Concrete Paving
Section 32 13 73 Concrete Paving Joint Sealants
Section 32 93 00 Plants

DIVISION 33 **- UTILITIES**

Section 33 41 00 Storm Utility Drainage Piping
Section 33 46 00 Subdrainage

END OF SECTION 00 01 10

CONCORD CITY HALL

GENERAL

G001	COVER SHEET

CIVIL

C100	EXISTING CONDITIONS
C200	DEMOLITION PLAN
C300	SITE PLAN
C310	TRAFFIC CONTROL PLAN PHASE 1
C320	TRAFFIC CONTROL PLAN PHASE 2
C400	SEDIMENTATION AND EROSION CONTROL PLAN PHASE 1
C410	SEDIMENTATION AND EROSION CONTROL PLAN PHASE 2
C500	GRADING AND DRAINAGE PLAN PHASE 1
C510	GRADING AND DRAINAGE PLAN PHASE 2
C600	UTILITY PLAN
C900	SITE DETAILS
C901	SITE DETAILS
C910	SEDIMENTATION AND EROSION CONTROL DETAILS
C920	GRADING AND DRAINAGE DETAILS
C930	UTILITY DETAILS
C931	UTILITY DETAILS

ARCHITECTURAL

A000	APPENDIX B
A001	LIFE SAFETY PLANS
A002	LIFE SAFETY PLANS
A003	UL DETAILS
A004	UL DETAILS
A005	UL DETAILS
A101	LEVEL 1 PLAN
A102	LEVEL 2 PLAN
A103	LEVEL 3 PLAN
A104	LEVEL 4 PLAN
A105	ROOF PLAN
A106	ENLARGED LEVEL 1 PLAN
A107	ENLARGED LEVEL 1 PLAN
A108	ENLARGED LEVEL 2 PLAN
A109	ENLARGED LEVEL 2 PLAN
A110	ENLARGED LEVEL 3 PLAN
A111	ENLARGED LEVEL 3 PLAN
A112	ENLARGED LEVEL 4 PLAN
A113	ENLARGED LEVEL 4 PLAN
A200	BUILDING ELEVATIONS
A201	BUILDING ELEVATIONS
A400	WALL SECTIONS
A401	WALL SECTIONS
A402	WALL SECTIONS
A403	WALL SECTIONS
A404	WALL SECTIONS
A510	ENLARGED STAIR PLANS, SECTIONS, AND DETAILS
A511	ENLARGED STAIR PLANS

A512	STAIR SECTIONS AND DETAILS
A513	ELEVATOR PLANS AND SECTION
A514	ELEVATOR PLANS AND SECTION

STRUCTURAL

S001A	GENERAL NOTES AND ABBREVIATIONS
S002	GENERAL NOTES AND STATEMENT OF SPECIAL INSPECTIONS
S101	FOUNDATION PLAN
S101A	CONCRETE WALL DIMENSION PLAN
S101B	CONCRETE SHELF PLAN
S102	SECOND FLOOR FRAMING PLAN
S103	THIRD FLOOR FRAMING PLAN
S104	FOURTH FLOOR FRAMING PLAN
S105	ROOF FRAMING PLAN
S200	TYPICAL FOUNDATION DETAILS
S201	TYPICAL FOUNDATION DETAILS
S202	TYPICAL FOUNDATION DETAILS
S203	PIER DETAILS
S204	PIER & MISC. FOUNDATION DETAILS

PLUMBING

P001	SCHEDULES, NOTES - PLUMBING
P101	FOUNDATION PLAN PLUMBING

ELECTRICAL

E401	SITE PLAN ELECTRICAL

END OF SECTION 00 01 15

SECTION 00 31 32 - GEOTECHNICAL DATA

The following geotechnical information was compiled by:

PFESSIONAL SERVICES INDUSTRIES, INC (PSI)
5021 WEST W.T. HARRIS BLVD.
CHARLOTTE, NC 28269
704/598-2234

The enclosed soil reports are meant only as an aid to the Contractor during the bidding and construction phases and do not guarantee the soil conditions at the project site. Unit prices for unsuitable soil, in-place structural fill and rock removal are required of the Contractor on the Bid Form to cover actual soil conditions and soil encountered during construction.

Information To Build On
Engineering • Consulting • Testing

April 30, 2014

Ms. Sue Hyde, P.E.
Engineering Director
City of Concord
Alfred M. Brown Operations Center
850 Warren C. Coleman Boulevard
PO Box 308
Concord, North Carolina 28026-0308

hydes@concordnc.gov

Subject: Report of Geotechnical Exploration and Assessment
Proposed Concord City Hall
Cabarrus Avenue West at Market Street SW
Concord, North Carolina
PSI Project No: 0511559

Dear Ms. Hyde:

Professional Service Industries, Inc. is pleased to provide our Geotechnical Engineering Services Report for the proposed City Hall in Concord, North Carolina. This report includes the results of field and laboratory testing, and recommendations for foundation design, as well as general site development.

PSI appreciates the opportunity to perform this Geotechnical Study and look forward to continued participation during the design and construction phases of this project. If you have any questions pertaining to this report, or if PSI may be of further service, please contact our office at 704-598-2234.

PSI also has great interest in providing materials testing and inspection services during the construction of this project. If you will advise us of the appropriate time to discuss these engineering services, we will be pleased to meet with you at your convenience.

Very truly yours,
PROFESSIONAL SERVICE INDUSTRIES, INC.

Andrew O. Steege, PG
Senior Geologist

Richard E. Finnen, Jr., PE
Vice President/Principal Consultant

NORTH CAROLINA PROFESSIONAL SEAL 039492 ENGINEER RICHARD E. FINNEN, JR.
4/30/2014

TABLE OF CONTENTS

1 PROJECT INFORMATION 1
1.1 PROPOSAL AND PROJECT AUTHORIZATION 1
1.2 PROJECT DESCRIPTION 1
1.3 PURPOSE AND SCOPE OF WORK 2
2 EXPLORATION PROCEDURES 2
2.1 FIELD SERVICES 2
2.2 LABORATORY TESTING 3
3 SITE AND SUBSURFACE CONDITIONS 3
3.1 SITE DESCRIPTION 3
3.2 SITE GEOLOGY 4
3.3 SUBSURFACE CONDITIONS 5
3.4 LABORATORY TEST RESULTS 7
4 GEOTECHNICAL EVALUATION AND RECOMMENDATIONS 8
4.1 GEOTECHNICAL ASSESSMENT 8
4.2 SITE PREPARATION AND EARTHWORK 10
4.3 SEISMIC CONSIDERATIONS 12
4.4 FOUNDATION RECOMMENDATIONS 13
4.5 FLOOR SLAB RECOMMENDATIONS 15
4.6 RETAINING WALL DESIGN GUIDELINES AND PARAMETERS 17
4.7 PAVEMENT SUBGRADE CONSIDERATIONS 18
5 CONSTRUCTION CONSIDERATIONS 19
5.1 GROUNDWATER 19
5.2 EXCAVATION AND SAFETY 19
6 REPORT LIMITATIONS 21

APPENDIX
Boring Location Plan
Site Vicinity Map
General Notes and Soil Classification Chart
Boring Logs
Subsurface Profiles
Foundation Plan

1 PROJECT INFORMATION

1.1 PROPOSAL AND PROJECT AUTHORIZATION

This report presents our findings and recommendations of a geotechnical exploration and assessment performed by Professional Service Industries, Inc. (PSI) for the proposed City Hall in Concord, North Carolina. These services were performed in accordance with a Standard Form of Agreement for Professional Services (dated March 27, 2014) that references PSI Proposal No. 0511-116117 (Revised) dated February 28, 2014.

1.2 PROJECT DESCRIPTION

Information used to prepare this report was provided to PSI through an emailed request for proposal (RFP) sent on February 12, 2014. The RFP was prepared by Stewart Engineering, Inc. and dated November 21, 2013, and included a "Site Plan" presenting proposed construction, existing site features and thirteen requested boring locations. The "Site Plan" was prepared by ADW Architects and dated January 17, 2011. On April 2, 2014, we were also provided with a drawing titled "Existing Conditions", prepared by ADW. This drawing presents existing topographic information for the site. Finally, on April 28, 2014, Stewart Engineers provided us with a foundation drawing for the project (with no title block or date).

Based on the information provided, we understand that the proposed project will consist of the construction of a new building with a footprint area of about 20,000 square feet (approximately 100 feet by 200 feet). We understand the building will be a steel frame, three-story structure with a basement. The RFP indicates the building will have maximum column and wall loads of about 500 kips and 2.5 to 3 kips per foot, respectively. Proposed construction will also include a paved parking area to the southwest of the proposed building and landscaped areas.

Specific site grading information was not provided to us. However, we understand that the new City Hall will have a finished floor elevation (FFE) of 685.36 feet, which will essentially match the adjacent Police Station building. Based on this FFE and the provided existing topographic information, cut depths ranging from about 0 to 17 feet will be needed for the basement excavation.

PSI performed geotechnical and environmental engineering services for the adjacent police station building about 10 years ago. Based on this past experience, as well as information included in the RFP, we understand the police station building is supported by a deep foundation system (steel H piles) and incorporates a vapor mitigation system.

The information presented in this section was used in the evaluation. Estimated loads and corresponding foundation sizes have a direct effect on the recommendations, including the type of foundation, the allowable soil bearing pressure, and the estimated settlement. In addition, estimated subgrade elevations and cut/fill quantities can have a direct effect on the provided recommendations. If any of the noted information is incorrect or has changed, please inform PSI so that we may amend the recommendations presented in this report, if appropriate. If PSI is not retained to perform this function, PSI cannot be responsible for the impact of the changes on the performance of the project.

1.3 PURPOSE AND SCOPE OF WORK

The purpose of this study was to obtain information regarding the general subsurface conditions within the proposed construction area, to assess the engineering characteristics of the subsurface materials, and to provide general design recommendations regarding the geotechnical aspects of the proposed construction.

To accomplish this, PSI performed a site reconnaissance, drilled eleven soil test borings within the proposed building addition footprint area, conducted laboratory classification testing and prepared this report summarizing the findings, as well as our conclusions and recommendations.

The scope of our geotechnical services also included a limited environmental assessment for determining the presence or absence of hazardous or toxic materials in the soil and groundwater within the site area. The results of this assessment are discussed further under a separate cover. Any statement in this report or on the boring logs regarding odors, colors, unusual or suspicious items, or conditions are strictly for the information of our client.

PSI did not provide nor was it requested to provide any service to investigate or detect the presence of moisture, mold or other biological contaminants in or around any structure, or any service that was designed or intended to prevent or lower the risk of the occurrence of the amplification of the same. Client acknowledges that mold is ubiquitous to the environment with mold amplification occurring when building materials are impacted by moisture. Client further acknowledges that site conditions are outside of PSI's control, and that mold amplification will likely occur, or continue to occur, in the presence of moisture. As such, PSI cannot and shall not be held responsible for the occurrence or recurrence of mold amplification.

2 EXPLORATION PROCEDURES

2.1 FIELD SERVICES

PSI advanced eleven soil test borings (Borings B-3 through B-13) within the proposed areas of site improvement. Two additional borings were included within our original proposed scope of work for this project (B-1 and B-2). However, based on potential underground utility conflicts and access limitations, and as directed by Ms. Hyde of the City of Concord, B-1 and B-2 were deleted. The approximate boring locations are shown on the attached "Boring Location Plan" (Figure 2). Horizontal and vertical survey control was not performed for the test boring locations prior to our field exploration program. The borings were located based upon measured distances and relationships to obvious landmarks and the Site Plan provided by the client. The boring locations are considered accurate to the degree implied by these methods.

Soil test borings were advanced at this site by HPC Land Services, a subcontractor hired by PSI, utilizing an ATV-mounted CME 550 drilling rig using hollow-stem, continuous-flight augers. All boring and sampling operations were conducted in general compliance with ASTM D 1586. At regular intervals, soil samples were obtained with a standard 2-inch O.D. split-barrel sampler.

An automatic trip drop hammer was used for the standard penetration testing, which has a higher efficiency than a manual cathead-and-rope hammer. Typically, the automatic hammer yields lower standard penetration test resistances (N-values) than a manual cathead-and-rope hammer. This reduction has been taken into account in our evaluation. However, the N-values reported on the logs, and the consistency descriptions on the boring logs are based on the field-recorded values.

The recovered soil samples were transported to our laboratory where they were visually classified by a geologist. A "Boring Log" was prepared for each boring and the "Logs" are included in the Appendix of the report. The logs were prepared using the observations made in the field by the driller, as well as the classifications in the laboratory and the laboratory test results. Strata descriptions, presented on the logs, were based on visual-manual evaluations by our geologist and include the classifications in general accordance with the Unified Soil Classification System (USCS). The "Soil Classification Chart", included in the Appendix, illustrates the USCS legend depicted on the logs. Neither ground surface elevations nor a detailed topographic map of the site from which to estimate the ground surface elevations at the boring locations performed was provided. Prior to final design and construction, PSI recommends that these elevations be determined by a professional surveyor licensed in the state of North Carolina.

Headspace analysis was performed on the recovered soil samples in the field using soil with a photo-ionization detector (PID) instrument. The results of these tests are presented on the boring logs, and are discussed further under separate cover.

Groundwater level measurements and caved depths were measured in the boreholes at the time of boring, upon completion of drilling, and after a period of approximately 24 hours. The results of the readings are included on the soil test boring logs. The borings were backfilled with the auger cuttings or bentonite after the delay groundwater level measurement.

2.2 LABORATORY TESTING

A geologist visually-manually classified the soil samples in the laboratory in general accordance with the Unified Soil Classification System (USCS) (ASTM D2487 and D2488). Percent finer than the No. 200 sieve (ASTM D1140), Atterberg limits tests (ASTM D4318), and natural water content determinations (ASTM D2216) were conducted on representative samples recovered from the test boring locations. The laboratory test results are presented in Section 3.4 and are shown on the individual boring logs.

3 SITE AND SUBSURFACE CONDITIONS

3.1 SITE DESCRIPTION

The site lies in the south quadrant of the intersection of Cabarrus Avenue West and Market Street SW in Concord, North Carolina. An unnamed, one-way access roadway bounds the site to the southeast. The approximate site location is depicted on the Site Vicinity Map (Figure 1) included in the Appendix.

The approximately 20,000 square foot site (approximately 200 feet by 100 feet) consists of a grass-covered area immediately adjacent to the northeast side of the existing Police Station. However, ornamental trees and landscaped areas were noted along the northwest and northeast site boundaries (adjacent to Cabarrus Avenue and Market Street, respectively). A round, level area constructed of retaining wall blocks and brick pavers, used for Christmas tree display, was observed in the northwest-central site area, and a brick paver sidewalk along with lighting and flagpoles was noted along the southwest edge of the site (adjacent to the Police Station).

The ground surface across the site generally slopes downward from north to south. Based on the provided topographic information, relief across the site is on the order of 17 feet. As such, the Cabarrus Avenue entrance to the Police Station in on the first floor level, and the rear or southeast entrance (from the unnamed access roadway) is at the basement level. Utilities within the site area include buried power, sewer, phone, and water near the roadway boundaries. Additional buried power for the Christmas tree display area and lighting was noted in the northern site area. At the time of our field work (April 1 and 2, 2014) the ground surface was firm and our equipment experienced no apparent difficulty moving across the site.

3.2 SITE GEOLOGY

The project site is located within Cabarrus County, North Carolina, and lies within the Charlotte Belt of the Piedmont Physiographic Province of the eastern United States. This province is characterized by broad, gently rolling ridges formed on the stronger bedrock of the area. Between these ridges, lowlands and drainage areas are formed on the less resistant bedrock. The Piedmont is a complex assemblage of igneous (volcanic and plutonic) and sedimentary rocks that were generally formed during the Late Proterozoic Era and the Early Cambrian Period (approximately 550 to 900 million years ago). During and subsequent to formation these rocks were subjected to several major tectonic events, including plate collisions, folding, faulting, and igneous intrusions, that resulted in the uplift and metamorphism of the preexisting rocks. The tectonic activity generally stopped about 200 to 250 million years ago and erosional forces have formed the current ground surface. Review of the USGS Geologic Map of the Charlotte 1° by 2° Quadrangle (1988, by Goldsmith, Milton and Horton) indicates that the site area is underlain by meta quartz diorite of late Proterozoic to early Cambrian age. In addition, large masses of plutonic, intrusive, igneous rock comprised of Devonian, Silurian, and Pennsylvanian to Permian age granite outcrop across much of the Concord, North Carolina area.

Residual soils are the result of in-place physical and chemical weathering of the parent bedrock. In this area, residual soils generally consist of an upper layer of fine-grained SILT or CLAY underlain by Sandy SILT or Silty SAND. The sand content generally increases with depth. Separating the residual soil from the underlying parent bedrock is typically a transition zone of high consistency material referred to as partially weathered rock. Partially weathered rock is defined as residual material with Standard Penetration Resistance (ASTM D1586) in excess of 50 blows per 6-inches penetration.

The weathering processes that produced the residual soils and partially weathered rock were extremely variable, due to such factors as rock type and mineralogy, past groundwater conditions, and the tectonic history of the specific area (resulting in localized fractures, joints and faults within the bedrock). Differential weathering of the parent bedrock has resulted in highly variable subsurface conditions, and can include abrupt changes in soil type and consistency over relatively short horizontal and vertical distances. Furthermore, depths to rock can also be highly variable; and suspended boulders, discontinuous rock layers/lenses, or rock pinnacles can be present within the residual soils and transitional zones of partially weathered rock.

Existing fill materials were encountered at the site. The quality and suitability of exiting fill can vary significantly. It is not uncommon to encounter deeper depth so existing fill, unsuitable materials, debris, buried foundations and slabs or other undesirable materials on previously developed sites.

3.3 SUBSURFACE CONDITIONS

General subsurface conditions encountered during the subsurface exploration are described below. For more detailed soil descriptions and stratifications at the boring locations, the Boring Logs and Subsurface Profiles included in the Appendix should be reviewed. The Boring Logs represent our interpretation of the subsurface conditions based on a review of the field logs and an engineering examination of the samples. The horizontal stratification lines designating the interface between various strata represent approximate boundaries. Transition between different strata in the field may be gradual in both the horizontal and vertical directions. Groundwater, or lack thereof, encountered in the borings and noted on the "Boring Logs" represents conditions only at the time of the exploration.

3.3.1 SURFACE

Initially, all of the borings except B-11 encountered a layer of topsoil ranging from approximately 2 to 4 inches in thickness. Deeper pockets of topsoil may be encountered at the site. The term topsoil, as used in this report, is a general designation given to the surface horizon of soil which appears to have an elevated organic content. No laboratory testing was performed on the topsoil to determine its suitability for supporting plant life, or ability to satisfy a particular specification. At B-11 brick pavers were observed at the ground surface (these were removed by our field crew prior to drilling and replaced afterward) underlain by about 8 inches of gravel.

3.3.2 FILL

Fill soils were encountered beneath the topsoil layer in all eleven of the borings to depths ranging from approximately 6 to 19 feet. The fill encountered generally consisted of Sandy SILT (ML), Silty SAND (SM), Clayey SAND (SC), Sandy GRAVEL (GW) and Elastic SILT (MH). The fill was also noted to contain varying amounts of rock fragments, bricks, concrete, coal, topsoil and wood. These materials appeared to range in size from less than about ½ inch in diameter up to boulder size; however, the size of the larger rock fragments and other material within the fill could not be accurately assessed due to the method of investigation (soil test drilling). In addition, at boring B-11 clean gravel fill was encountered from a depth of approximately 2 to 9½ feet. The Standard Penetration Test resistances (N-values) recorded in the fill ranged from 3 to 23 blows per foot (bpf), suggesting a variable level of compaction. The higher N-values likely resulted from encountering rocks or other debris within the fill. In addition, N-values of greater than 100 bpf were recorded at B-7 and B-10, where the sampling spoon is presumed to have encountered boulders.

Boring B-12 was terminated in the fill upon auger refusal at a depth of about 8½ feet. Refusal appeared to occur on concrete. As such, B-12 was offset approximately 6 feet southeast and re-drilled, and the offset boring also encountered auger refusal at a depth of about 8½ feet. These refusals may represent a buried slab, footing or other remnant from a former building, and generally occurred at the approximate elevation in which residuum would initially be expected based on results of nearby borings B-11 and B-13. However, additional investigation such as test pits will be required to verify this assumption.

3.3.3 RESIDUUM

Residual soils were encountered beneath the fill at all of the borings except B-12. The sampled residual soils generally consisted of stiff Elastic SILT (MH), very stiff Fat CLAY (CH), stiff Lean CLAY (CL), medium stiff to stiff Sandy SILT (ML), loose to medium dense Clayey SAND (SC), and loose to

very dense Silty SAND (SM). The N-values recorded in the residual soils ranged from 7 to 62 bpf but generally were typically in the 10 to 25 bpf range. Borings B-3 and B-4 were terminated in residual soil at a depth of approximately 15 feet.

3.3.4 PARTIALLY WEATHERED ROCK AND AUGER REFUSAL MATERIAL

Partially weathered rock (PWR) was encountered in seven of the borings (B-5 through B-10 and B-13) at depths ranging from approximately 22 to 33 feet beneath the existing ground surface (approximate elevations ranging from 662 to 674 feet). Partially weathered rock is defined as material having a Standard Penetration Test value of 50 blows per 6 inches or less of penetration. Where encountered, the PWR was generally sampled as Silty SAND with weathered rock fragments.

Auger refusal occurred in eight of the borings (B-5 through B-11 and B-13) at depths ranging from about 18½ to 34 feet beneath the existing ground surface (approximate elevations ranging from 660 to 683.5 feet). The shallowest auger refusal occurred at boring B-11, located in the northwest corner of the proposed building footprint (at approximate elevation 683.5 feet). If B-11 is not considered, the remaining borings encountered auger refusal at elevations ranging from about 660 to 670 feet. Auger refusal is a term that describes subsurface materials sufficiently competent to prevent auger penetration with geotechnical drilling equipment. Auger refusal likely occurred on the surface of continuous bedrock or suspended boulders. Core sampling of the refusal materials to determine their consistency and composition was beyond the scope of services for this project.

3.3.4 GROUNDWATER INFORMATION

Groundwater infiltration was measured in seven of the eleven borings at the time of drilling and/or approximately 24 hours afterward. The borings that encountered groundwater infiltration, along with the approximate measured depths and elevations of the groundwater in the borings, are presented in the following table.

Groundwater Depths

Boring	Approximate Depth to Groundwater at Time of Drilling (feet)	Approximate Depth to Groundwater Upon Completion of drilling (feet)	Approximate Stabilized Depth to Groundwater (feet)	Approximate Groundwater Elevation (feet MSL)
B-3	14	None, Caved at 9	None, Caved at 9	675
B-4*	None	None	None	---
B-5	32.5	32.1	None, Caved at 22	663
B-6*	17	19½	16	675
B-7	10	21, Caved at 21.2	21, Caved at 21.2	673
B-8	31	31½	None, Caved at 12.5	669
B-9*	27	25½	22½	674
B-10	28	None, Caved at 21	None, Caved at 21	671
B-11	None	None	None, Caved at 9	---
B-12	None	None	NM	---
B-13	None	None	None, caved at 20.5	---

NM – Not Measured *Temporary piezometer installed

Subsurface water levels within this region tend to fluctuate with seasonal and climatic changes, as well as with some types of construction operations. Generally, the highest groundwater levels occur in late winter and early spring; and the lowest levels in late summer and early fall. Therefore, water may be encountered during construction at depths not indicated during this study.

Fill soils saturated with apparent perched water were encountered in boring B-7 from about 8 to 12 feet (approximate elevation 682 to 686 feet). Additionally, perched groundwater conditions can develop over low permeability soil or weathered rock following periods of heavy or prolonged precipitation. Groundwater may be encountered during construction at depths not indicated during this exploration.

The groundwater levels presented in this report are the levels that were measured at the time of the field activities and fluctuation should be anticipated. Subsurface water levels within this region tend to fluctuate with seasonal and climatic changes, as well as with some types of construction operations. Further, groundwater in the Piedmont Province is often localized and frequently travels along the top of rock or very dense weathered rock strata. Generally, the highest groundwater levels occur in late winter and early spring; and the lowest levels in late summer and early fall. Therefore, water may be encountered during construction at depths not indicated during this study. We recommend that the Contractor determine the actual groundwater levels at the time of construction to determine groundwater impact on the construction procedures.

3.4 LABORATORY TEST RESULTS

The results of the laboratory testing program are summarized in the following table.

Sample Location	Sample Depth (ft)	Moisture Content (%)	Percent Fines (%)	ATTERBERG LIMITS			USCS Soil Classification
				LL	PL	PI	
B-7	13.5 – 15	16.5	39.9	53	27	26	SC
B-8	13.5 – 15	24.0	59.7	52	28	24	CH*
B-9	8.5 - 10	24.4	62.3	66	33	33	MH*
B-9	13.5 – 15	21.4	46.1	67	42	25	SC

*Not recommended for direct support of foundations

3.5 INFILTRATION TEST RESULTS

PSI performed testing to evaluate the infiltration rate of water (in-situ saturated hydraulic conductivity – K_{SAT}) at the approximate basement level of the proposed building. PSI performed the infiltration testing using a Precision Permeameter™, an instrument used to measure K_{SAT} of soils in the vadose zone (earth and rock zone above the permanent water table) by establishing a constant head of water at a predetermined depth in a borehole, then measuring the rate of water flow into the borehole required to maintain the constant head. In order to conduct the test, an open borehole was required to maintain the constant head. The testing was performed in the south area of the proposed building footprint at the approximate location denoted as HA-1 on the Boring Location Plan (included in the Appendix) at a depth of approximately 3 feet. The results of the soil infiltration test indicate a K_{SAT} value of 0.57 feet/day (1.78 cm/day).

An appropriate factor of safety should be utilized when using this value. Furthermore, due to the varying soil types encountered at the subgrade elevation for the building, this value is not considered representative for the entire building footprint and additional testing should be considered.

4 GEOTECHNICAL EVALUATION AND RECOMMENDATIONS

4.1 GEOTECHNICAL ASSESSMENT

The following geotechnical design recommendations have been developed on the basis of the previously described project characteristics and subsurface conditions encountered. If there are any changes in these project criteria, including the proposed building location on the site or the anticipated structural loads, a review should be made by PSI to determine if modifications to the recommendations are warranted.

Once final design plans and specifications are available, a general review by PSI is recommended as a means to check that the evaluations made in preparation of this report are correct and that earthwork and foundation recommendations are properly interpreted and implemented.

Based on the results of the fieldwork, laboratory evaluation and engineering analyses, we have identified the following potential constraints to the development of this site; the presence of previously placed, variable consistency fill soils. However, we believe with proper planning and execution, the site can be adapted for the proposed structure and associated improvements.

4.1.1 FILL SOILS

Subsurface conditions consisting of variably compacted fill soils containing rock fragments, bricks, concrete, coal, topsoil and wood were encountered across the entire proposed building area. The fill extended to depths ranging from about 6 to 19 feet. The Standard Penetration Test resistances (N-values) recorded in the fill ranged from 3 to 23 blows per foot (bpf), suggesting a variable level of compaction. The higher N-values likely resulted from encountering rocks or other debris within the fill. In addition, N-values of greater than 100 bpf were recorded at B-7 and B-10 when the sampling spoon is assumed to have encountered boulders.

The quality of man-made fills can vary significantly over short distances (i.e. between test locations) and with depth which makes it difficult, if not impossible, to accurately assess the engineering properties of existing fills. Furthermore, there is no specific correlation between N-values from Standard Penetration Tests (SPT) performed in soil borings and the degree of compaction of existing fill soils. As such, there is some risk in building over unmonitored and undocumented fill. Typical distress associated with the building on uncontrolled fills may include but not be limited to differential settlement of the slab over short distances, cracked drywall, cracked slabs, racked door frames, windows and doors that don't open and close properly, bird baths in pavements, damage and distress to site utilities, etc.

A broad qualitative assessment of existing fills can sometimes be made based on the N-values obtained and observations of the materials sampled in the test borings. The Standard Penetration Test resistances (N-values) recorded in the fill ranged from 3 to 23 blows per foot, which would generally suggest the fill at the site received a variable level of compaction.

The boring data and the proposed grading information indicates the existing fill soils will be removed over the northwest portion of the building footprint during the basement excavation to approximate elevation 685 feet. However, up to about 10 feet of fill soils will remain in the southeast building footprint area after the basement excavation. Based on the composition and low N-values, it is PSI's opinion that these remaining fill soils are currently unsuitable for support of the proposed building without remedial measures. In order to control long-term total and differential settlements to tolerable levels, we recommend that the southeast portion of the proposed building be supported on shallow spread footings in conjunction with an intermediate foundation support system [i.e. aggregate piers (Impact Piers)]. The northwest portion of the building may be supported on conventional shallow spread footings bearing in the residual soils underlying the fill. The Boring Location Plan and the Foundation Drawing, included in the Appendix, present the approximate boundary line between these two types of foundation support. However, the final determination of this boundary should be made by PSIs geotechnical engineer after removal of the over burden soils.

4.1.2 PAVEMENTS AND LANDSCAPED AREAS

Detailed plans depicting proposed pavement and landscaped areas in the immediate vicinity of the proposed building were not provided to us at the time of this report. However, we understand these will be incorporated into the final design, and may include small retaining walls (with maximum heights on the order of 3 to 4 feet). As such, the following general subgrade preparation recommendations are provided for use in these areas.

Initially, existing site improvements including foundations, slabs, pavements, and utilities, as well as wet soils, topsoil, organics, and other unsuitable materials, should be stripped from an area extending at least 5 feet beyond the outline of proposed construction, if possible. Depressions or low areas resulting from stripping, grubbing, demolition of buildings, utility lines and other subsurface appurtenances should be backfilled with compacted structural fill in accordance with the recommendations presented in the following section.

After stripping and demolition as required, removal of unsuitable surface soils, and rough excavation grading, we recommend that areas to provide structural support for the retaining walls, pavements, and/or structural fill be evaluated carefully for the presence of soft, surficial soils, loose fill soils and/or elastic soils, by proof-rolling and inspection by the geotechnical engineer. It is assumed that the near-surface soils in these areas will consist of previously placed fill material similar to that encountered at the borings discussed herein. As such, we anticipate that undercutting of poorly compacted fill soils will be required over portions of these areas. Actual extents and depths of required undercut will be dependent upon final site grades and the composition and consistency of the fill material encountered, and will be determined in the field by PSI personnel during grading operations. However, we anticipate undercutting depths on the order of 2 feet will be adequate. The undercut material should be replaced with structural fill or ABC stone, placed and compacted as discussed in the following section.

Based on the borings and our understanding that maximum retaining wall heights will not exceed about 3 to 4 feet, we recommend the retaining wall foundations be designed for a maximum net allowable soil bearing pressure of 1,500 pounds per square foot or less. The recommended foundation depth is at least 24 inches below final finished grades. All foundation excavations should be evaluated for the presence of organic-laden, plastic/elastic, and/or poorly compacted fill soils. Should these materials be encountered in foundation excavations, they should be removed

and replaced with structural fill, placed and compacted as described in Section 4.2. Additional information regarding recommended footing evaluations in presented in Section 4,4,1.

Relatively clean granular sand or aggregate (no greater than 15 percent fines) is typically recommended by manufacturers for backfill within the reinforced zone behind MSE or modular block walls. Specific backfill and placement requirements within the reinforced zone of the wall fill will be provided by the wall designer. Based on the borings and past experience, PSI anticipates that existing on-site soil will not meet this backfill requirement and that granular import will be needed to meet the manufacturer's specifications. It is recommended that all walls have permanent drainage structures behind the walls to increase stability and provide added protection against piping failures within the wall backfill material.

Backfill placed around the retaining wall (outside the reinforced zone) should be placed in loose layers not exceeding eight inches in thickness. The fill can be compacted using a small walk-behind vibratory plate or steel drum roller having a minimum impact force of 3,000 pounds. The controlled fill should be compacted as indicated in the site preparation section of the report. No heavy construction equipment should be allowed within five feet of the retaining wall.

In order to reduce undercutting volumes (and the potential off-site disposal of these soils), pavements in the vicinity of the building can be grade supported following compaction of the near surface soils and fill placement. There is a potential for development of depressions or "bird baths" in the pavement over time as the existing fill settles, however, the cost of removal and replacement of the fill may not be warranted as compared to periodic maintenance of the pavement areas.

Detailed discussion of our recommendations for building design and construction are presented in the following sections of this report.

4.2 SITE PREPARATION AND EARTHWORK

4.2.1 GENERAL SITE PREPARATION

Initially, all vegetation, organic laden soil, debris, building foundations, and any other deleterious materials must be removed from the proposed building area.

After achieving finished subgrade in cut areas and prior to placing fill in any areas below finished subgrade, it is recommended that the exposed subgrade be evaluated to confirm that any unsuitable materials have been removed by PSI's geotechnical engineer. During this evaluation, those areas that are at finished subgrade or areas to receive fill should be proofrolled with a loaded tandem-axle dump truck or similar pneumatic-tired equipment with a minimum weight of 15 tons and a maximum weight of 20 tons. The vehicle should make at least four passes over each location, with the last two passes perpendicular to the first two. Areas that wave, rut, or deflect significantly and continue to do so after several passes of the proof-roller should be undercut to firmer soils. Undercut areas should be backfilled in thin lifts with approved, compacted fill materials. Proof-roll operations should be monitored carefully by PSI's Project Geotechnical Engineer.

Drying soils for re-use as structural fill is often considered a routine aspect of typical grading operations and is not considered a pay item. If unit prices for earthwork operations are established, they should be examined closely before the contract is executed. If undercutting is a pay item, then

undercut volumes should be determined by field measurement. Methods such as counting trucks should not be used for determination of undercut volume, as they are less accurate.

Recommended criteria for soil fill characteristics (both on-site and imported materials) and compaction procedures are listed below. The project design documents should include the following recommendations to address proper placement and compaction of project fill materials. Earthwork operations should not begin until representative samples are collected and tested and the maximum dry density and optimum moisture content are determined.

EARTH FILL MATERIALS

- Imported fill material satisfactory for structural fill should include clean soil material with USCS classifications of (GW, GM, SW, SP, SM, and some SC, CL or ML). The fill material should have a Standard Proctor (ASTM D698) Maximum Dry Density of at least 100 pcf, a maximum Liquid Limit of 40 and a Plasticity Index of 20 or less.

- Organic content or other foreign matter (debris) should be no greater than 3 percent by weight, and no large roots (greater than ¼ inch in diameter) should be allowed. Organic materials should not be intentionally mixed into structural fill.

- Material utilized as fill should not contain rocks greater than 3 inches in diameter or greater than 30 percent retained on the ¾-inch sieve.

COMPACTION RECOMMENDATIONS

- Maximum loose lift thickness – 8 inches, mass fill. Loose lifts of 4 to 6 inches in trenches and other confined spaces where hand operated equipment is used.

- Compaction requirements – 95 percent of the maximum dry density and 98 percent within the upper 12 inches as determined by the standard Proctor (ASTM D698) compaction test.

- Soil moisture content at time of compaction – within ±3 percent of the optimum moisture content.

TEST CRITERIA TO EVALUATE FILL AND COMPACTION

- One standard Proctor compaction test and one Atterberg limits test for each soil type used as project fill. Gradation tests may be necessary and should be performed at the geotechnical engineer's discretion.

- One density test every 2,500 square feet for each lift or two tests per lift, whichever is greater (for preliminary planning only; the test frequency should be determined by our engineering staff.

- Trench fill areas – one density test every 75 linear feet at vertical intervals of 2 feet or less.

It will be very important to divert drainage prior to the outset of construction and maintain positive site drainage throughout construction. Storm water runoff should be diverted around the building area.

The site should be graded at all times such that water is not allowed to pond. The surface should be sealed with a smooth drum roller to enhance drainage if precipitation is expected. Subgrades damaged by construction equipment should be repaired immediately to avoid further degradation in adjacent areas and to help prevent water ponding.

Should there be a significant time lag or period of inclement weather between site grading and the fine grading of the slab prior to the placement of stone or concrete, PSI should assess the condition of the prepared subgrade. The subgrade may require scarification and recompaction or other remedial measures to provide a firm and unyielding subgrade prior to final slab construction.

4.3 SEISMIC CONSIDERATIONS

The project site is located within a municipality that employs the 2009 International Building Code® (IBC). As part of this Code, the design of structures must consider dynamic forces resulting from seismic events. These forces are dependent upon the magnitude of the earthquake event, as well as the properties of the soils that underlie the site. As part of the procedure to evaluate seismic forces, the Code requires the evaluation of the Seismic Site Class, which categorizes the site based upon the characteristics of the subsurface profile within the upper 100 feet of the ground surface.

To define the Site Class for this project, we first interpreted the results of soil test borings drilled within the project site and estimated appropriate soil properties below the base of the borings to a depth of 100 feet, as permitted by the Code. The estimated soil properties were based upon our experience with subsurface conditions in the general site area.

Based upon the SPT N-values recorded during the field exploration, and assuming that ground improvement (impact piers) discussed in the following section are implemented, the subsurface conditions within the site are consistent with the characteristics of a ***Site Class "C"*** as defined in the Code. The associated IBC (2012) probabilistic ground acceleration values and site coefficients for the general site area can be obtained from the USGS geohazards web page http://earthquake.usgs.gov/designmaps/us/application.php.

Qualitative Seismic Site Assessments

Hazard	Relative Risk	Comments
Liquefaction	Low	The subsurface profile within the upper 25 feet of the ground surface contains materials with sufficient fines and density that are not susceptible to liquefaction.
Slope Stability*	Low	Permanent slopes are not included in site design.
Surface Rupture	Low	No known active faults underlie the site.

*A slope stability analysis, including its stability during a seismic event, was beyond the scope of work.

4.4 FOUNDATION RECOMMENDATIONS

The boring data and the proposed grading information indicates the existing fill soils will be removed over the northwest portion of the building footprint during the basement excavation to approximate elevation 685 feet. However, up to about 10 feet of fill soils will remain in the southeast building footprint area after the basement excavation. Based on the composition and low N-values, it is PSI's opinion that these remaining fill soils are currently unsuitable for support of the proposed building without remedial measures. In order to control long-term total and differential settlements to tolerable levels, we recommend that the southeast portion of the proposed building be supported on shallow spread footings in conjunction with an intermediate foundation support system [i.e. aggregate piers (Impact Piers)]. The northwest portion of the building may be supported on conventional shallow spread footings bearing in the residual soils underlying the fill. The Boring Location Plan and the Foundation Plan, included in the Appendix, present the approximate boundary line between these two types of foundation support. However, the final determination of this boundary should be made by PSIs geotechnical engineer after removal of the over burden soils.

4.4.1 SHALLOW FOUNDATIONS

Based on the results of the geotechnical exploration, we recommend that the northwest portion of the proposed structure be supported on conventional shallow spread footings. We recommend that footings be designed for a maximum allowable soil bearing pressure of 5,000 pounds per square foot. This recommendation assumes that the building foundations will bear in sandy residual soils and the column loading is at or less than 500 kips and wall loads on the order of 3 kips per linear foot or less. If the actual structural loading is greater than discussed above, a lesser net allowable soil bearing pressure may be required and PSI should be contacted for additional analysis. Foundations should not bear in existing fill or residuum consisting of Fat CLAY (CH) or Elastic SILT (MH). We recommend continuous wall and column footings with minimum widths of at least 18 inches and 24 inches, respectively regardless of the actual resulting bearing pressure.

All foundation excavations should be evaluated for the presence of organic-laden, plastic/elastic, and/or existing fill soils. Should these materials be encountered in foundation excavations, they should be removed and replaced with structural fill, placed and compacted as described in Section 4.2. All foundations should bear at a minimum depth of 18 inches below the lowest adjacent final ground surface for frost penetration and protective embedment. PSI recommends that the foundations be designed in accordance with the 2009 International Building Code.

We estimate that foundations designed and constructed in accordance with the recommendations herein will experience post-construction total settlements generally less than 1-inch with differential settlement along a 40-foot long portion of a continuous footing, or similarly spaced column footings generally less than ½-inch. Total and differential settlements of these magnitudes are usually considered tolerable for the anticipated construction. However, the tolerance of the proposed structure to the predicted total and differential settlements should be confirmed by the structural engineer.

New foundations constructed in areas adjacent to the existing structure will require special consideration. Footings that are constructed within 5 feet or less of each other will induce overlapping stresses in the subgrade soils that may lead to additional settlement of the existing building, excessive differential settlement (possibly as much as total settlement), and unsightly cracking. If adjacent foundations bear at different levels there is a greater potential for excessive differential settlement. Therefore, new foundations should be located in such a way that the stresses under the new footings will not overstress the soil under the existing footings, or the foundation systems should be combined structurally.

Foundation concrete should be placed as soon as possible after excavation. If foundation excavations must be left open overnight, or exposed to inclement weather, the base of the excavation should be protected with a mat a couple of inches of lean concrete. Footing excavations should be protected from surface water run-off and freezing. If water is allowed to accumulate within a footing excavation and soften the bearing soils, or if the bearing soils are allowed to freeze, the deficient soils should be removed from the excavation prior to concrete placement.

Footing excavations should be evaluated by PSI to determine that soils capable of supporting the recommended design bearing pressures are present at and immediately below the bearing level. We recommend that the bearing soils at the bottom of and below the footing excavations be checked with a dynamic cone penetrometer to assess the suitability of the soils. A hand auger should be used to advance a borehole for this evaluation to a depth equal to at least the foundation width, or 3 feet whichever is greater. Footing evaluations should be performed prior to reinforcement and concrete placement. If unsuitable bearing soils are encountered, these soils will need to be removed. The foundations can then be established at the new, lower bearing elevation, or the unsuitable material replaced with properly compacted fill, flowable fill, or lean concrete. If compacted structural fill is used as backfill, the undercut excavations to remove unsuitable materials should be centered beneath the footing and widened 1/2 foot for each foot of undercut depth. If lean concrete or flowable fill is used as backfill, the foundation excavation need not be widened. Open graded stone such as No. 57 stone should not be used to backfill foundation excavations.

4.4.2 SHALLOW FOUNDATIONS WITH GROUND IMPROVEMENT

Due to the depth, apparent composition, and level of compaction of the fill material, improvement of this layer through over-excavation and replacement to reduce the potential for excessive differential settlement is probably not practical and cost effective. Therefore, it is PSI's recommendation that the southeast portion of the proposed steel frame building structure can be supported by shallow foundations supported on existing soil reinforced by compacted aggregate piers. Based upon our experience, it is our opinion that use of aggregate piers will be more economical than undercutting to the depth of the soft fill material necessary to ensure the satisfactory long-term foundation performance for the proposed structure or by using a deep foundation system, such as driven piles or auger cast-in-place piles.

In order to reduce the amount of spoils generated by the traditional drilled-in compacted pier installation, we recommend utilizing the "Impact Pier" (IP) installation method. Impact Piers are constructed by using displacement methods through a specialized mandrel to introduce compacted aggregate piers into the soil profile. The aggregate is compacted in thin lifts using crowd pressure and a high energy vibratory hammer with a specialized tamper to densify the aggregate vertically and increase lateral stress in the soil matrix. The construction process

results in a reinforced soil profile with less compressibility than the existing soil. Constructed IP elements typically range from 18- to 24-inch diameter and extend to depths of up to 50 feet for displacement techniques. However maximum IP depths on the order of 20 to 25 feet would likely apply to this project.

We have spoken to GeoStructures, Inc., regarding the suitability of installing rammed impact piers at the project site. GeoStructures considers Impact Piers to be a viable option and recommends utilizing a maximum allowable bearing capacity of up to 5,000 psf for this site.

Total settlement of the IP elements is a function of the design and will have a direct influence on the construction cost. Total settlement for foundations supported by Geopier IP elements will be designed for a tolerance of 1 inch with ½ inch differential settlement over a span of 50 feet. GeoStructures can provide pricing options for different settlement criteria upon request.

The IP installer should provide one Geopier Modulus Test for the project at a location approved by the Geotechnical Engineer of Record. The Modulus Test should include a test pier designed and constructed similar to the production piers and should be loaded to 150% of the design load.

GeoStructures, Inc. of Graham, North Carolina (919) 410-2545, can provide final design and construction of the IP foundation system. We recommend that you contact them to review and analyze the subsurface data in this report, as well as the proposed structural loads for the project, and provide you with a cost estimate for IP installation.

The IP design should be reviewed by PSI. Furthermore, we recommend that the IP installation quality control (QC) program be monitored full time by PSI. The QC program includes conducting verification of crowd stabilization, measurement of drill depths and aggregate lift thickness. These items should be documented for each IP element installed to provide a complete record of foundation quality.

Other ground improvement techniques, such as control modulus piers, GeoPiers and other drilled in place compacted piers could be considered for this project. However, we anticipate that the added cost of spoils removals may off-set savings due environmental disposal costs due to site impacts. PSI would be pleased to discuss these issues with you in order to develop efficient foundation designs and costs savings for this project.

4.5 FLOOR SLAB RECOMMENDATIONS

Floor slabs may be supported on subgrades prepared in accordance with the SITE PREPARATION AND EARTHWORK section (Section 4.2) of this report. We anticipate some undercutting may be required in areas where existing fill is still present below the proposed finished floor elevation (in the southeast portion of the proposed building footprint). Selective removal and replacement may be required to provide sufficient, non-yielding subgrade support for the basement slab in these areas. Where concrete slabs are designed as beams on an elastic foundation, the soils that will comprise the subgrade soils should be assumed to have a modulus of subgrade reaction (k) of 100 pounds per cubic inch (pci). This value is estimated based on the expected results of a plate load test using a nominal 30-inch plate.

In order to provide uniform support beneath any proposed floor slab-on-grade, we recommend that floor slabs be underlain by a minimum of 4 inches of compacted aggregate base course material. The estimated modulus of subgrade reaction after the addition of 4 inches of aggregate subbase material is 140 pci.

The aggregate base course material should be compacted to at least 98 percent of its Standard Proctor maximum dry density. Open-graded crushed stone, such as No. 57 stone may also be used; however, it is our experience that open graded crushed stone can collect water during periods of rain and cause saturation and softening of the subgrade soils prior to placement of the floor slab concrete. Therefore, construction sequencing/timing, and the season in which the stone is placed, should be taken into consideration.

The crushed rock is also intended to provide a capillary break to limit migration of moisture through the slab. If additional protection against moisture vapor is desired, a vapor retarding membrane may also be incorporated into the design; however, there are no specific conditions that mandate its use. Factors such as cost, special considerations for construction, and the floor coverings suggest that decisions on the use of vapor retarding membranes be made by the architect and owner. Based on the subsurface materials and the intended use of the structure, we recommend the use of a vapor retarding membrane. Vapor retarders, if used, should be installed in accordance with ACI 302.1, Chapter 3.

The precautions listed below should be closely followed for construction of slabs-on-grade. These details will not prevent the amount of slab movement, but are intended to reduce potential damage should some settlement of the supporting subgrade take place.

- Cracking of slabs-on-grade is normal and should be expected. Cracking can occur not only as a result of heaving or compression of the supporting soil, but also as a result of concrete curing stresses. The occurrence of concrete shrinkage cracks, and problems associated with concrete curing may be reduced and/or controlled by limiting the water to cement ratio of the concrete, proper concrete placement, finishing, and curing, and by the placement of crack control joints at frequent intervals, particularly, where re-entrant slab corners occur. The American Concrete Institute (ACI) recommends a maximum panel size (in feet) equal to approximately three times the thickness of the slab (in inches) in both directions. For example, joints are recommended at a maximum spacing of 12 feet assuming a four-inch thick slab. We also recommend that control joints be scored three feet in from and parallel to all foundation walls. Using fiber reinforcement in the concrete can also control shrinkage cracking.

- Some increase in moisture content is inevitable as a result of development and associated landscaping; however, extreme moisture content increases can be largely controlled by proper and responsible site drainage, building maintenance and irrigation practices.

- All backfill in areas supporting slabs should be moisture conditioned and compacted as described earlier in this report. Backfill in all interior and exterior utility line trenches should be carefully compacted.

- Exterior slabs should be isolated from the building. These slabs should be reinforced to function as independent units. Movement of these slabs should not be transmitted to the building foundation or superstructure.

PSI will prepare recommendations for vapor mitigation under separate cover if recommended for this project. Those supplement recommendations may supersede recommendations contained in this section of this report.

4.6 RETAINING WALL DESIGN GUIDELINES AND PARAMETERS

The provided site plan does not incorporate retaining walls; however, the below-grade walls for the basement of the proposed building will act as retaining walls. If needed, PSI recommends utilizing the following guidelines:

Retaining walls must be capable of resisting the lateral earth pressures that will be imposed on them. Shear strength testing was not performed on the soils sampled during this exploration. However, based on the material types and our experience, the earth pressure coefficients detailed below are recommended.

Walls that will be laterally restrained and not free to deflect or rotate (i.e., loading dock walls tied into existing slabs-on-grade) should be designed using the “at-rest” (Ko) earth pressure condition. Walls that are not restrained (retaining walls) and can tolerate the required movement can be designed using the “active” (Ka) earth pressure condition. A third condition, the "passive state" (Kp) represents the maximum possible pressure when a structure is pushed against the soil and is used in wall foundation design to help resist "active" or "at-rest" pressures. The earth pressure coefficients used in the design will depend upon the type of backfill used.

Imported No. 57 stone or approved free draining granular soil typically is suitable for use as backfill within the “active” zone of retaining walls. Soils with Plasticity Index values greater than 10 (PI>10) should not be used for backfill behind the walls within the “active” zone. Additionally, soils with high mica content should not be considered for use as backfill behind the walls within the “active” zone. The active zone is typically modeled by an area extending rearward one foot from the base of the wall footing and then extending upward toward the ground surface at an inclination of 45 degrees plus one-half of the internal angle of friction ($45^\circ + \Phi/2$).

Based on the results of our geotechnical exploration, we recommend the following lateral earth pressure coefficients be used for design purposes:

Lateral Earth Pressure Parameters

Material Group Symbol	Internal Friction Angle ϕ	Moist Unit Weight, γ (pcf)	Earth Pressure Coefficients		
			Active (K_a)	At-Rest (K_o)	Passive (K_p)
Free draining granular soil – Medium dense or greater	30	110	0.33	0.50	3.0
No. 57 Stone	36	120	0.26	0.41	3.88

Passive earth pressure of the soil adjacent to the footing, as well as soil friction at the footing base, may be used to resist sliding. Because significant wall movements are required to develop the "passive" earth pressure, the total calculated "passive" pressure may be reduced by one-half to two-thirds for design purposes. A coefficient of 0.30 could be reasonably assumed for evaluating allowable frictional resistance to sliding at the foundation (concrete)-soil contact. The design bearing pressure for the retaining wall foundations should correspond to the value provided earlier in this report.

The recommended earth pressure coefficients assume horizontal backfill and that constantly functioning drainage systems are installed between walls and soil backfill to prevent the build-up of hydrostatic pressures and lateral stresses in excess of those stated.

Even though shallow groundwater may not be encountered, wall drainage is very important because of the potential for infiltration of surface water and water from other sources (leaks, irrigation, etc.). In addition, damp proofing should be applied to the outside of below grade walls. If a sufficient drainage system is not installed, the lateral earth pressures should be computed using the buoyant weight of the soil and the hydrostatic pressure due to the water must be added to the earth pressure to estimate the lateral earth pressure for design. A water collection system consisting of 4- to 6-inch diameter, slotted, corrugated polyethylene tubing per ASTM F405 (Standard Specification for Corrugated Polyethylene Pipe and Fittings), surrounded by at least 12 inches of No. 57 stone can be used. The aggregate should be wrapped with drainage geotextile such as Mirafi® 140N or equivalent. These pipes should then discharge by gravity to a lower lying area of the site beyond the building and pavement limits, or to a sump with a pump.

Special care should be taken while compacting the backfill behind below grade and retaining walls. Over-compaction of backfill behind retaining walls may result in the buildup of excessive lateral pressures, and potential structural distress. To avoid over-compaction of the backfill behind walls, we recommend that the backfill within 5 feet of the wall be compacted with small hand operated equipment to at least 95 percent of the maximum dry density of the standard Proctor as determined by ASTM D698. Heavy compactors and large pieces of construction equipment should not operate within 5 feet of the embedded wall to avoid the buildup of excessive lateral pressures unless the walls have been designed to accommodate these forces.

4.7 PAVEMENT SUBGRADE CONSIDERATIONS

Following the stripping of deleterious materials, the proposed pavement subgrade should be prepared and compacted in accordance with the recommendations provided in Section 4.2 “SITE PREPARATION AND EARTHWORK” section of this report. Proof-rolling and recompacting the upper 8 inches of subgrade should be performed immediately prior to placement of the pavement section. The exposed pavement subgrade should also be evaluated by a representative of the construction materials testing firm immediately prior to placing the pavement section. If low consistency soils are encountered which cannot be adequately densified in place, such soils should be removed and replaced with well-compacted soil fill or crushed stone materials.

Based upon the findings of our borings, the recommendations presented herein, and the assumed grading, we anticipate the on-site fill soils (including SM and ML), or newly placed structural fill soils, will be present at the subgrade elevation. A California Bearing Ratio (CBR) value of about 5 can be reasonably assumed for these materials at compaction levels of about 98 percent of the standard Proctor maximum dry density within about 3 percent of optimum moisture.

Site grading is generally accomplished early in the construction phase. Subsequently as construction proceeds the subgrade may be disturbed due to utility excavations, construction traffic, desiccation, and rainfall. As a result, the pavement subgrade may not be suitable for pavement construction and corrective action will be required. The subgrade should be carefully evaluated at the time of pavement subgrade areas should be reworked, moisture conditioned, and property compacted to the recommendations in this report immediately prior to paving.

Prevention of infiltration of water into the subgrade is essential for the successful long-term performance of any pavement. Both the subgrade and the pavement surface should be sloped to promote surface drainage away from the pavement structure.

5 CONSTRUCTION CONSIDERATIONS

5.1 GROUNDWATER

Groundwater infiltration was encountered in seven of the eleven borings at elevations ranging from about 663 to 675 feet. Therefore, based on a proposed finished floor elevation of 685 feet, it appears that groundwater will not significantly impact the proposed construction. However, a volume of apparent perched water was encountered within fill soils in boring B-7 from approximate elevation 682 to 686, and additional perched water zones may be encountered during the excavation for the building basement. If encountered, we recommend that the groundwater table be lowered and maintained at a depth of at least 2 feet below bearing levels and excavation bottoms during construction. Adequate control of groundwater could likely be accomplished by means of pumping from gravel-lined, cased sumps. However, the contractor should be responsible for selecting the most optimal dewatering method. Furthermore, we recommend that the Contractor determine the actual groundwater levels at the time of construction to determine the groundwater impact on the construction procedures.

Groundwater levels within this region tend to fluctuate with seasonal and climatic changes, and confined pockets of perched water often occur above the groundwater table. Generally, the highest groundwater levels occur in late winter and early spring; and the lowest levels in late summer and early fall. Therefore, water may be encountered during construction at depths not indicated during this study.

5.2 EXCAVATION AND SAFETY

The proposed development will include construction of a basement structure of approximately 20,000 square feet in plan area. The basement level slab will be constructed at depths ranging from approximately 0 to 20 feet below the existing grade. As the site is bordered by the adjacent Police Station structure to the southwest, and local streets along the northwest, northeast and southeast sides, stepping back the side slopes will not be a viable option. As such, a soil retention system will be required during the construction phase of the project. A permanent soil retention system consisting of cantilever soldier piers or a temporary soil retention system consisting of soil nail walls and/or soldier pile (H-piles) with wood lagging can be installed during the construction phase of the project.

Once the selection of the support the excavation system is finalized, PSI should be given an opportunity to review the conceptual design plans of the soil retention system and to evaluate its impact on the recommended foundation systems. These designs should be provided to the design

team as a submittal for review. If requested, PSI would be pleased to assist in the design of the earth retention system for the proposed below grade level construction.

Based on the data available from the borings, anticipated excavations during grading across most of the site will generally encounter very stiff and medium dense soils that can typically be removed by conventional earthmoving equipment such as pans, scrapers, and trackhoes. Some localized pre-loosening of higher consistency soils may be necessary. However, boring B-11, located at the northwest corner of the proposed building footprint, encountered auger refusal material at approximate elevation 683½ feet, or about 1½ feet below the proposed basement FFE. Therefore, difficult excavation material will likely be encountered within the northwest portion of the basement excavation. Due to the close proximity of this area to the existing Police Station building, blasting to facilitate rock removal will likely not be a feasible option.

Based on our experience in the Piedmont Physiographic Province, PWR with N-values of 50 blows per 3 inches penetration or greater can generally be removed with moderate difficulty after loosening with a large (Caterpillar D-8 or larger) tractor-drawn ripper in mass grading operations. To remove the PWR within trenches and excavation a Caterpillar 325 or larger hydraulic excavator with rock teeth may be used. Higher consistency PWR (N-values of 50 blows per 2 inches or less, and rock (defined as auger refusal material), would likely require splitting or jack-hammering to facilitate removal. As depth increases, excavation is expected to become more difficult. Additionally, narrow excavations, such as utility trenching, will be much more difficult.

Rock coring to evaluate the character and continuity of the refusal material was beyond our scope of services for this project. However, details noted at the time of drilling (such as the sound of the auger bit when auger refusal material was encountered and the split spoon bouncing in the refusal material) suggest the refusal material is quite hard; however, rock bedding, jointing and fractures can contribute significantly to the difficulties associated with removal Rock pneumatic jack hammers (hoe rams) can be used on an excavator to break up and loosen rock for removal. Line drilling by utilizing a pneumatic drill and placing holes along the boundaries of the proposed excavation area is another option.

If the rock removal options discussed above are not effective, expansive resin may be considered to assist in the removal of the rock at this site. Expansive resins are used to break and fracture sound bedrock and generally consists of injecting high-pressure foam resins to initiate, pressurize and propagate controlled fracturing in rock. The resin is injected into a pre-drilled hole. The high viscosity of the foam combined with its stored energy result in a consistent and controlled breakage. Airblast and flyrock are reduced, allowing the method to be applied in a continuous manner and to be used in urban and other sensitive environments. The fractured bedrock is then reduced to smaller more manageable size by utilizing hoe rams mounted on hydraulic excavators.

In addition, boring B-12, located near the northern edge of the proposed building footprint and about 40 feet northeast of B-11, encountered auger refusal material at approximate elevation 692½ feet. At B-12 the refusal material appeared to consist of concrete and is thought to represent a buried slab, footing or some other remnant from a former building. However, difficult excavations should also be expected in the area of B-12.

In evaluating grading considerations, please keep in mind that subsurface conditions, particularly the level and location of rock, whether in boulder or massive form, vary erratically in the Piedmont Geologic Province of which Cabarrus County and this site are parts. Therefore, additional rock may be encountered at shallow depths, particularly in the northwest site area. If large boulders or massive rock is encountered during the grading operations between boring locations, rock removal techniques as discussed above may be necessary to perform the planned excavation. In addition, confined excavations such as utility trenches are more likely to require rock excavation techniques than large open cuts. All excavations should be sloped or shored in accordance with applicable OSHA regulations.

In Federal Register, Volume 54, No. 209 (October 1989), the United States Department of Labor, Occupational Safety and Health Administration (OSHA) amended its "Construction Standards for Excavations, 29 CFR, Part 1926, Subpart P". This document was issued to better allow for the safety of workers entering trenches or excavations. It is mandated by this federal regulation that excavations, whether they be utility trenches, basement excavations or footing excavations, be constructed in accordance with the new OSHA guidelines. It is our understanding that these regulations are being strictly enforced and if they are not closely followed, the owner and the Contractor could be liable for substantial penalties.

The Contractor is solely responsible for designing and constructing stable, temporary excavations and should shore, slope, or bench the sides of the excavations as required to maintain stability of both the excavation sides and bottom. The Contractor's "responsible person", as defined in 29 CFR Part 1926, should evaluate the soil exposed in the excavations as part of the Contractor's safety procedures. In no case should slope height, slope inclination, or excavation depth, including utility trench excavation depth, exceed those specified in all local, state, and federal safety regulations.

We are providing this information solely as a service to our client. PSI does not assume responsibility for construction site safety or the Contractor's or other parties' compliance with local, state, and federal safety or other regulations. Groundwater control is critical to excavation safety and is described above.

6 REPORT LIMITATIONS

The recommendations submitted are based on the available subsurface information obtained by PSI and design details furnished by **Stewart Engineering and the City of Concord** for the proposed project. If there are any revisions to the plans for this project or if deviations from the subsurface conditions noted in this report are encountered during construction, PSI should be notified immediately to determine if changes in the foundation recommendations are required. If PSI is not retained to perform these functions, we will not be responsible for the impact of those conditions on the geotechnical recommendations for the project.

PSI warrants that the findings, recommendations, specifications, or professional advice contained herein have been made in accordance with generally accepted professional geotechnical engineering practices in the local area at the date of this report. No other warranties are implied or expressed.

After the plans and specifications are more complete, PSI should be retained and provided the opportunity to review the final design plans and specifications to check that our engineering recommendations have been properly incorporated into the design documents. At that time, it may be necessary to submit supplementary recommendations. This report has been prepared for the exclusive use of **the City of Concord** and their consultants for the specific application to the proposed **City Hall in Concord, North Carolina**.

APPENDICES

SITE VICINITY MAP

Aerial photo obtained from the Cabarrus County GIS website.

Approximate Scale

0 285 feet

North

Project Name:	FIGURE 1 – SITE VICINITY MAP
Proposed City Hall Cabarrus Avenue W and Market Street SW Concord, North Carolina	psi Information To Build On Engineering • Consulting • Testing
Project No.: 0511-559 / **Date:** April, 2014	

BORING LOCATION PLAN

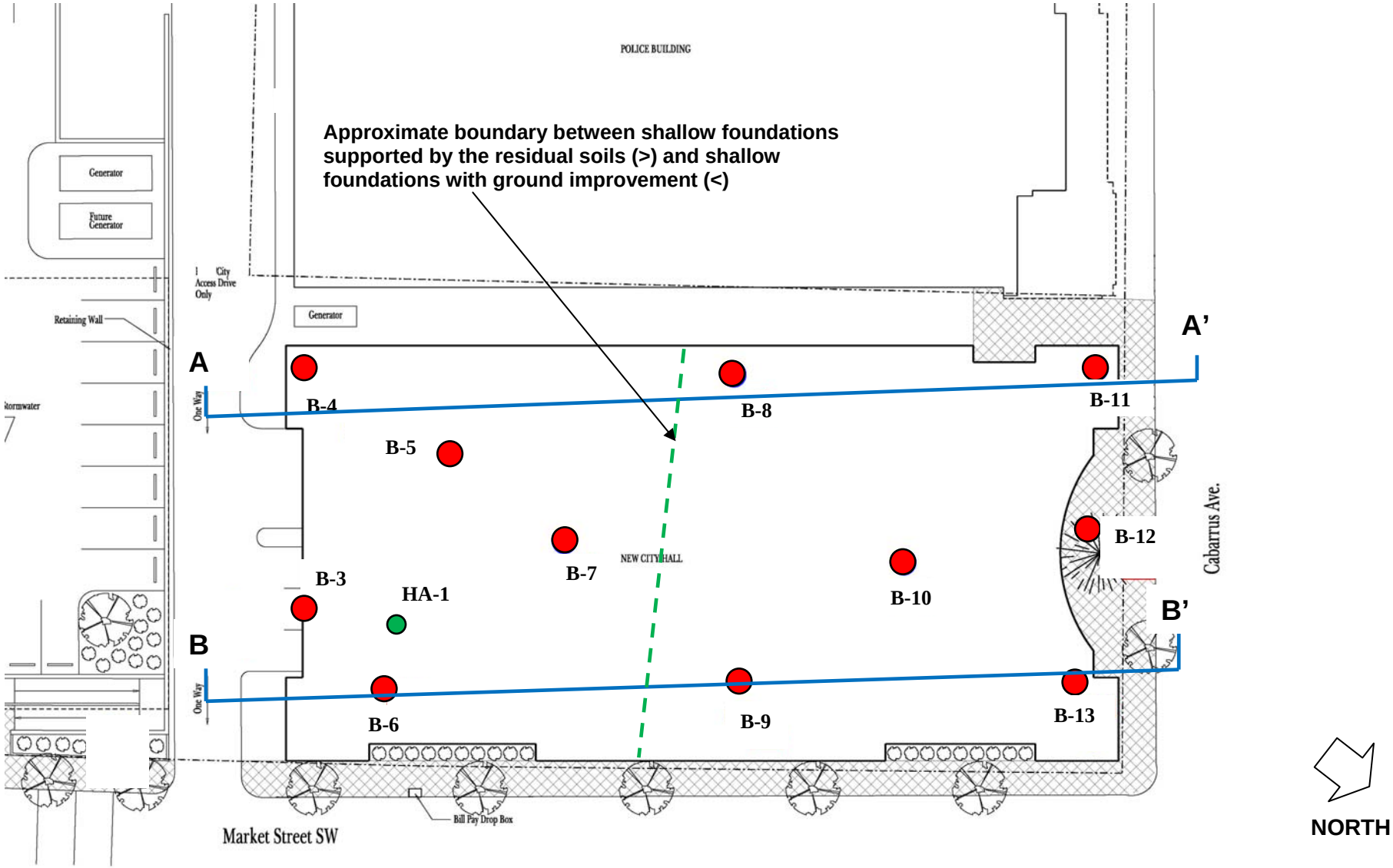

Project Name: Concord City Hall Cabarrus Avenue W and Market Street SW Concord, North Carolina	Base Drawing "Site Plan" prepared by ADW Architects and dated January 1, 2011	Approximate Scale 0 — 37 feet
Project No.: 0511559 **Date:** April, 2014	**Figure 2** **Boring Location Plan**	Approximate Boring Location Approx. Infiltration Test Location Approximate Subsurface Profile Location

GENERAL NOTES AND
SOIL CLASSIFICATION CHART

GENERAL NOTES

SAMPLE IDENTIFICATION

The Unified Soil Classification System (USCS), AASHTO 1988 and ASTM designations D2487 and D-2488 are used to identify the encountered materials unless otherwise noted. Coarse-grained soils are defined as having more than 50% of their dry weight retained on a #200 sieve (0.075mm); they are described as: boulders, cobbles, gravel or sand. Fine-grained soils have less than 50% of their dry weight retained on a #200 sieve; they are defined as silts or clay depending on their Atterberg Limit attributes. Major constituents may be added as modifiers and minor constituents may be added according to the relative proportions based on grain size.

DRILLING AND SAMPLING SYMBOLS

SFA: Solid Flight Auger - typically 4" diameter flights, except where noted.
HSA: Hollow Stem Auger - typically 3¼" or 4¼ I.D. openings, except where noted.
M.R.: Mud Rotary - Uses a rotary head with Bentonite or Polymer Slurry
R.C.: Diamond Bit Core Sampler
H.A.: Hand Auger
P.A.: Power Auger - Handheld motorized auger

SS: Split-Spoon - 1 3/8" I.D., 2" O.D., except where noted.
ST: Shelby Tube - 3" O.D., except where noted.
RC: Rock Core
TC: Texas Cone
BS: Bulk Sample
PM: Pressuremeter
CPT-U: Cone Penetrometer Testing with Pore-Pressure Readings

SOIL PROPERTY SYMBOLS

N: Standard "N" penetration: Blows per foot of a 140 pound hammer falling 30 inches on a 2-inch O.D. Split-Spoon.
N_{60}: A "N" penetration value corrected to an equivalent 60% hammer energy transfer efficiency (ETR)
Q_u: Unconfined compressive strength, TSF
Q_p: Pocket penetrometer value, unconfined compressive strength, TSF
w%: Moisture/water content, %
LL: Liquid Limit, %
PL: Plastic Limit, %
PI: Plasticity Index = (LL-PL),%
DD: Dry unit weight, pcf
▼,▽,▼ Apparent groundwater level at time noted

RELATIVE DENSITY OF COARSE-GRAINED SOILS

Relative Density	N - Blows/foot
Very Loose	0 - 4
Loose	4 - 10
Medium Dense	10 - 30
Dense	30 - 50
Very Dense	50 - 80
Extremely Dense	80+

ANGULARITY OF COARSE-GRAINED PARTICLES

Description	Criteria
Angular:	Particles have sharp edges and relatively plane sides with unpolished surfaces
Subangular:	Particles are similar to angular description, but have rounded edges
Subrounded:	Particles have nearly plane sides, but have well-rounded corners and edges
Rounded:	Particles have smoothly curved sides and no edges

GRAIN-SIZE TERMINOLOGY

Component	Size Range
Boulders:	Over 300 mm (>12 in.)
Cobbles:	75 mm to 300 mm (3 in. to 12 in.)
Coarse-Grained Gravel:	19 mm to 75 mm (¾ in. to 3 in.)
Fine-Grained Gravel:	4.75 mm to 19 mm (No.4 to ¾ in.)
Coarse-Grained Sand:	2 mm to 4.75 mm (No.10 to No.4)
Medium-Grained Sand:	0.42 mm to 2 mm (No.40 to No.10)
Fine-Grained Sand:	0.075 mm to 0.42 mm (No. 200 to No.40)
Silt:	0.005 mm to 0.075 mm
Clay:	<0.005 mm

PARTICLE SHAPE

Description	Criteria
Flat:	Particles with width/thickness ratio > 3
Elongated:	Particles with length/width ratio > 3
Flat & Elongated:	Particles meet criteria for both flat and elongated

RELATIVE PROPORTIONS OF FINES

Descriptive Term	% Dry Weight
Trace:	< 5%
With:	5% to 12%
Modifier:	>12%

GENERAL NOTES

(Continued)

CONSISTENCY OF FINE-GRAINED SOILS

Q_U - TSF	N - Blows/foot	Consistency
0 - 0.25	0 - 2	Very Soft
0.25 - 0.50	2 - 4	Soft
0.50 - 1.00	4 - 8	Firm (Medium Stiff)
1.00 - 2.00	8 - 15	Stiff
2.00 - 4.00	15 - 30	Very Stiff
4.00 - 8.00	30 - 50	Hard
8.00+	50+	Very Hard

MOISTURE CONDITION DESCRIPTION

Description	Criteria
Dry:	Absence of moisture, dusty, dry to the touch
Moist:	Damp but no visible water
Wet:	Visible free water, usually soil is below water table

RELATIVE PROPORTIONS OF SAND AND GRAVEL

Descriptive Term	% Dry Weight
Trace:	< 15%
With:	15% to 30%
Modifier:	>30%

STRUCTURE DESCRIPTION

Description	Criteria
Stratified:	Alternating layers of varying material or color with layers at least ¼-inch (6 mm) thick
Laminated:	Alternating layers of varying material or color with layers less than ¼-inch (6 mm) thick
Fissured:	Breaks along definite planes of fracture with little resistance to fracturing
Slickensided:	Fracture planes appear polished or glossy, sometimes striated
Blocky:	Cohesive soil that can be broken down into small angular lumps which resist further breakdown
Lensed:	Inclusion of small pockets of different soils
Layer:	Inclusion greater than 3 inches thick (75 mm)
Seam:	Inclusion 1/8-inch to 3 inches (3 to 75 mm) thick extending through the sample
Parting:	Inclusion less than 1/8-inch (3 mm) thick

SCALE OF RELATIVE ROCK HARDNESS

Q_U - TSF	Consistency
2.5 - 10	Extremely Soft
10 - 50	Very Soft
50 - 250	Soft
250 - 525	Medium Hard
525 - 1,050	Moderately Hard
1,050 - 2,600	Hard
>2,600	Very Hard

ROCK BEDDING THICKNESSES

Description	Criteria
Very Thick Bedded	Greater than 3-foot (>1.0 m)
Thick Bedded	1-foot to 3-foot (0.3 m to 1.0 m)
Medium Bedded	4-inch to 1-foot (0.1 m to 0.3 m)
Thin Bedded	1¼-inch to 4-inch (30 mm to 100 mm)
Very Thin Bedded	½-inch to 1¼-inch (10 mm to 30 mm)
Thickly Laminated	1/8-inch to ½-inch (3 mm to 10 mm)
Thinly Laminated	1/8-inch or less "paper thin" (<3 mm)

ROCK VOIDS

Voids	Void Diameter
Pit	<6 mm (<0.25 in)
Vug	6 mm to 50 mm (0.25 in to 2 in)
Cavity	50 mm to 600 mm (2 in to 24 in)
Cave	>600 mm (>24 in)

GRAIN-SIZED TERMINOLOGY

(Typically Sedimentary Rock)

Component	Size Range
Very Coarse Grained	>4.76 mm
Coarse Grained	2.0 mm - 4.76 mm
Medium Grained	0.42 mm - 2.0 mm
Fine Grained	0.075 mm - 0.42 mm
Very Fine Grained	<0.075 mm

ROCK QUALITY DESCRIPTION

Rock Mass Description	RQD Value
Excellent	90 -100
Good	75 - 90
Fair	50 - 75
Poor	25 -50
Very Poor	Less than 25

DEGREE OF WEATHERING

Slightly Weathered:	Rock generally fresh, joints stained and discoloration extends into rock up to 25 mm (1 in), open joints may contain clay, core rings under hammer impact.
Weathered:	Rock mass is decomposed 50% or less, significant portions of the rock show discoloration and weathering effects, cores cannot be broken by hand or scraped by knife.
Highly Weathered:	Rock mass is more than 50% decomposed, complete discoloration of rock fabric, core may be extremely broken and gives clunk sound when struck by hammer, may be shaved with a knife.

SOIL CLASSIFICATION CHART

NOTE: DUAL SYMBOLS ARE USED TO INDICATE BORDERLINE SOIL CLASSIFICATIONS

MAJOR DIVISIONS			SYMBOLS GRAPH	SYMBOLS LETTER	TYPICAL DESCRIPTIONS
COARSE GRAINED SOILS MORE THAN 50% OF MATERIAL IS LARGER THAN NO. 200 SIEVE SIZE	GRAVEL AND GRAVELLY SOILS MORE THAN 50% OF COARSE FRACTION RETAINED ON NO. 4 SIEVE	CLEAN GRAVELS		GW	WELL-GRADED GRAVELS, GRAVEL - SAND MIXTURES, LITTLE OR NO FINES
		(LITTLE OR NO FINES)		GP	POORLY-GRADED GRAVELS, GRAVEL - SAND MIXTURES, LITTLE OR NO FINES
		GRAVELS WITH FINES		GM	SILTY GRAVELS, GRAVEL - SAND - SILT MIXTURES
		(APPRECIABLE AMOUNT OF FINES)		GC	CLAYEY GRAVELS, GRAVEL - SAND - CLAY MIXTURES
	SAND AND SANDY SOILS MORE THAN 50% OF COARSE FRACTION PASSING ON NO. 4 SIEVE	CLEAN SANDS		SW	WELL-GRADED SANDS, GRAVELLY SANDS, LITTLE OR NO FINES
		(LITTLE OR NO FINES)		SP	POORLY-GRADED SANDS, GRAVELLY SAND, LITTLE OR NO FINES
		SANDS WITH FINES		SM	SILTY SANDS, SAND - SILT MIXTURES
		(APPRECIABLE AMOUNT OF FINES)		SC	CLAYEY SANDS, SAND - CLAY MIXTURES
FINE GRAINED SOILS MORE THAN 50% OF MATERIAL IS SMALLER THAN NO. 200 SIEVE SIZE	SILTS AND CLAYS	LIQUID LIMIT LESS THAN 50		ML	INORGANIC SILTS AND VERY FINE SANDS, ROCK FLOUR, SILTY OR CLAYEY FINE SANDS OR CLAYEY SILTS WITH SLIGHT PLASTICITY
				CL	INORGANIC CLAYS OF LOW TO MEDIUM PLASTICITY, GRAVELLY CLAYS, SANDY CLAYS, SILTY CLAYS, LEAN CLAYS
				OL	ORGANIC SILTS AND ORGANIC SILTY CLAYS OF LOW PLASTICITY
	SILTS AND CLAYS	LIQUID LIMIT GREATER THAN 50		MH	INORGANIC SILTS, MICACEOUS OR DIATOMACEOUS FINE SAND OR SILTY SOILS
				CH	INORGANIC CLAYS OF HIGH PLASTICITY
				OH	ORGANIC CLAYS OF MEDIUM TO HIGH PLASTICITY, ORGANIC SILTS
HIGHLY ORGANIC SOILS				PT	PEAT, HUMUS, SWAMP SOILS WITH HIGH ORGANIC CONTENTS

psi

BORING LOGS

BORING B- 3

DATE STARTED:	4/2/14	**DRILL COMPANY:**	HPC
DATE COMPLETED:	4/2/14	**DRILLER:** J Cain	**LOGGED BY:** Steege
COMPLETION DEPTH	15.0 ft	**DRILL RIG:**	CME 550
BENCHMARK:	N/A	**DRILLING METHOD:**	Hollow Stem Auger
ELEVATION:	689 ft	**SAMPLING METHOD:**	2-in SS
LATITUDE:		**HAMMER TYPE:**	Automatic
LONGITUDE:		**EFFICIENCY**	N/A
STATION: N/A	**OFFSET:** N/A	**REVIEWED BY:**	AOS

Water

While Drilling	14 feet
Upon Completion	None feet
Delay	None feet

BORING LOCATION:
See Boring Location Plan

REMARKS: Boreholes backfilled with the auger cuttings after the delay water level measurement.

Elevation (feet)	Depth, (feet)	Graphic Log	Sample Type	Sample No.	Recovery (inches)	MATERIAL DESCRIPTION	USCS Classification	SPT Blows per 6-inch (SS)	Moisture, %	STANDARD PENETRATION TEST DATA N in blows/ft ◎ × Moisture ◪ PL ✚ LL (0 – 25 – 50) STRENGTH, tsf ▲ Qu ✳ Qp (0 – 2.0 – 4.0)	Additional Remarks
	0					**TOPSOIL** (3 inches)					
				1	16	**FILL** - Brown, Sandy SILT (ML) with rock and brick fragments, clay, trace roots - moist		3-4-5 N=9			PID=1.9 ppm
685	5			2	14	**FILL** - Brown/Dark Gray, Silty SAND (SM) with rock, brick, and coal fragments - moist		7-4-6 N=10			PID=2.2 ppm
				3	15			5-7-7 N=14			PID=3.4 ppm
680	10			4	16			2-1-2 N=3			PID=2.3 ppm
						RESIDUUM - Loose, Gray and Tan, Clayey SAND (SC) - moist, wet at about 14 feet					
675	15			5	18	Boring terminated at 15 feet.		3-4-4 N=8			PID=4.8 ppm

Professional Service Industries, Inc.
5021 West W.T. Harris Boulevard
Charlotte, NC 28269
Telephone: (704) 598-2234

PROJECT NO.: 0511559
PROJECT: Concord City Hall
LOCATION: Cabarrus Ave W at Market St SW
Concord, NC

The stratification lines represent approximate boundaries. The transition may be gradual.

BORING B- 4

DATE STARTED:	4/2/14	**DRILL COMPANY:**	HPC
DATE COMPLETED:	4/2/14	**DRILLER:** J Cain	**LOGGED BY:** Steege
COMPLETION DEPTH	15.0 ft	**DRILL RIG:**	CME 550
BENCHMARK:	N/A	**DRILLING METHOD:**	Hollow Stem Auger
ELEVATION:	686 ft	**SAMPLING METHOD:**	2-in SS
LATITUDE:		**HAMMER TYPE:**	Automatic
LONGITUDE:		**EFFICIENCY**	N/A
STATION: N/A	**OFFSET:** N/A	**REVIEWED BY:**	AOS

Water

While Drilling	None	feet
Upon Completion	None	feet
Delay	None	feet

BORING LOCATION:
See Boring Location Plan

REMARKS: Temporary piezometer installed to a depth of 15 feet. Borehole backfilled with bentinite after the delay water level measurement.

Elevation (feet)	Depth, (feet)	Graphic Log	Sample Type	Sample No.	Recovery (inches)	MATERIAL DESCRIPTION	USCS Classification	SPT Blows per 6-inch (SS)	Moisture, %	Additional Remarks
	0					**TOPSOIL** (3 inches)				
685				1	10	**FILL** - Brown, Sandy SILT (ML) with rock fragments, trace roots - moist		2-5-6 N=11		PID=1.6 ppm
	5			2	16	**FILL** - Brown/Gray, Silty SAND (SM) with rock, brick, and coal fragments - moist		3-9-14 N=23		PID=1.7 ppm
680				3	3	Poor recovery 6-7.5 and 8.5-10 feet		9-8-8 N=16		PID=2.1 ppm
	10			4	2			4-4-3 N=7		PID=2.2 ppm
675						**RESIDUUM** - Stiff, Tan/Gray, Clayey Sandy SILT (ML) - moist				
	15			5	16			3-4-5 N=9		PID=10.7 ppm

Boring terminated at 15 feet.

Impacted soils were noted within the cuttings upon retreival of the augers. The assumed impacted zone is from a depth of about 6 to 12 feet, in which poor split spoon sample recovery was obtained. A PID reading of 1070 ppm was recorded for a sample of the auger cuttings.

STANDARD PENETRATION TEST DATA
N in blows/ft ◎
× Moisture ◪ PL ✚ LL
0 25 50
STRENGTH, tsf
▲ Qu ✳ Qp
0 2.0 4.0

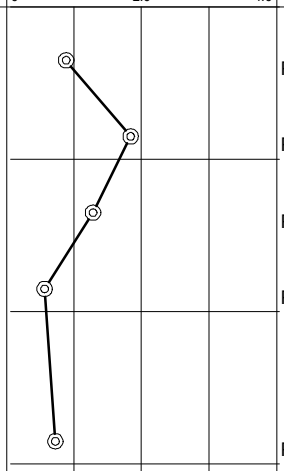

Professional Service Industries, Inc.
5021 West W.T. Harris Boulevard
Charlotte, NC 28269
Telephone: (704) 598-2234

PROJECT NO.: 0511559
PROJECT: Concord City Hall
LOCATION: Cabarrus Ave W at Market St SW
Concord, NC

The stratification lines represent approximate boundaries. The transition may be gradual.

BORING B- 5

DATE STARTED:	4/2/14	**DRILL COMPANY:**	HPC
DATE COMPLETED:	4/2/14	**DRILLER:** J Cain	**LOGGED BY:** Steege
COMPLETION DEPTH	33.5 ft	**DRILL RIG:**	CME 550
BENCHMARK:	N/A	**DRILLING METHOD:**	Hollow Stem Auger
ELEVATION:	695 ft	**SAMPLING METHOD:**	2-in SS
LATITUDE:		**HAMMER TYPE:**	Automatic
LONGITUDE:		**EFFICIENCY**	N/A
STATION: N/A	**OFFSET:** N/A	**REVIEWED BY:**	AOS

Water

While Drilling	32.5	feet
Upon Completion	32.1	feet
Delay	None	feet

BORING LOCATION:
See Boring Location Plan

REMARKS: Borehole backfilled with bentinite after the delay water level measurement.

Elevation (feet)	Depth, (feet)	Sample No.	Recovery (inches)	MATERIAL DESCRIPTION	SPT Blows per 6-inch (SS)	Additional Remarks
	0			**TOPSOIL** (3 inches)		
		1	14	**FILL** - Brown, Clayey Sandy SILT (ML), some rock and coal fragments, trace small wood fragments - moist	2-3-2 N=5	PID=0.3 ppm
		2	14	**FILL** - Gray/Brown, Silty SAND (SM) with rock and asphalt fragments - moist	4-4-5 N=9	PID=7.3 ppm
690	5	3	18		7-5-4 N=9	PID=9.4 ppm
		4	18	**FILL** - Broan/Tan, Clayey Silty Fine SAND (SM) with rock fragments - moist	4-8-10 N=18	PID=18.4 ppm
685	10					
		5	16	**FILL** - Brown/Red/Black, Clayey Sandy SILT (ML) with brick and rock fragments, trace wood fragments - moist to wet Wood noted in auger cuttings from 15-18 feet.	3-2-2 N=4	PID=12.7 ppm
680	15					
		6	18	**FILL** - Black, Topsoil and Wood Fragments - moist to wet **RESIDUUM** - Loose to Medium Dense, Tan/Gray, Clayey SAND (SC), pungent odor - moist to wet	0-3-4 N=7	PID=1110.0 ppm
675	20					
		7	18		4-6-8 N=14	PID=173.0 ppm
670	25					
		8	16	Medium Dense, Light Gray/Tan, Silty SAND (SM) with clay - moist Wet at 32.5 feet	5-7-7 N=14	PID=36.7 ppm
665	30					
		9	0	**PARTIALLY WEATHERED ROCK** - Not Recovered Boring terminated upon auger refusal at 33.5 feet.	10/0" * N=100	>>* Spoon Bouncing

STANDARD PENETRATION TEST DATA
N in blows/ft ◎
× Moisture ◪ PL ✚ LL
0 25 50
STRENGTH, tsf
▲ Qu ✳ Qp
0 2.0 4.0

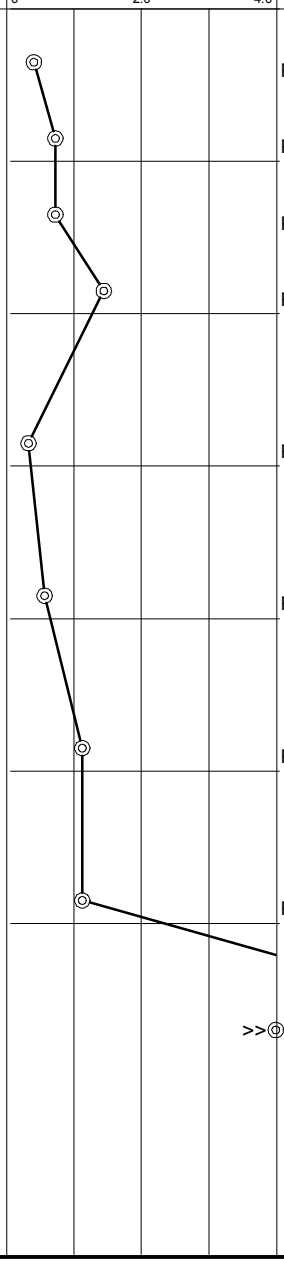

Professional Service Industries, Inc.
5021 West W.T. Harris Boulevard
Charlotte, NC 28269
Telephone: (704) 598-2234

PROJECT NO.: 0511559
PROJECT: Concord City Hall
LOCATION: Cabarrus Ave W at Market St SW
Concord, NC

The stratification lines represent approximate boundaries. The transition may be gradual.

BORING B- 6

DATE STARTED:	4/2/14	**DRILL COMPANY:**	HPC
DATE COMPLETED:	4/2/14	**DRILLER:** J Cain	**LOGGED BY:** Steege
COMPLETION DEPTH	23.5 ft	**DRILL RIG:**	CME 550
BENCHMARK:	N/A	**DRILLING METHOD:**	Hollow Stem Auger
ELEVATION:	691 ft	**SAMPLING METHOD:**	2-in SS
LATITUDE:		**HAMMER TYPE:**	Automatic
LONGITUDE:		**EFFICIENCY**	N/A
STATION: N/A	**OFFSET:** N/A	**REVIEWED BY:**	AOS

Water

While Drilling	17 feet
Upon Completion	19.3 feet
Delay	16 feet

BORING LOCATION:
See Boring Location Plan

REMARKS: Temporary piezometer installed to a depth of 23.5 feet. Borehole backfilled with bentinite after the delay water level measurement and collection of groundwater sample.

Elevation (feet)	Depth, (feet)	Sample No.	Recovery (inches)	MATERIAL DESCRIPTION	USCS Classification	SPT Blows per 6-inch (SS)	Moisture, %	Additional Remarks
	0			**TOPSOIL** (3 inches)				
690		1	15	**FILL** - Brown/Gray, Silty SAND (SM) with clay, rock fragments - moist		4-4-6 N=10		PID=14.0 ppm
	5	2	18	**FILL** - Brown/Red, Clayey Silty SAND (SM) and Sandy Elastic SILT (MH), some rock fragments - moist		2-2-2 N=4		PID=123.0 ppm
685		3	14	**FILL** - Brown/Red/Black, Clayey Silty SAND (SM) and topsoil, roots, rock fragments - moist		3-2-3 N=5		PID=110.0 ppm
	10	4	12	**FILL** - Red/Brown, Clayey SAND (SC) with rock fragments - moist		2-2-2 N=4		PID=10.3 ppm
680				**RESIDUUM** - Red/Tan, Sandy Elastic SILT (MH) - moist				
	15	5	18	Medium Dense, Light Gray and Tan, Clayey SAND (SC) - moist to wet		4-7-10 N=17		PID=44.7 ppm
675				Dense, Tan/White, Silty Fine to Coarse SAND (SM) - moist				
	20	6	18			9-13-18 N=31		PID=54.3 ppm
670				**PARTIALLY WEATHERED ROCK** - Not Recovered				
		7	0	Boring terminated upon auger refusal at 23.5 feet.		10/0" * N=100		>>* Spoon Bouncing

STANDARD PENETRATION TEST DATA
N in blows/ft ◎
× Moisture ◪ PL ✚ LL
0 25 50
STRENGTH, tsf
▲ Qu ✳ Qp
0 2.0 4.0

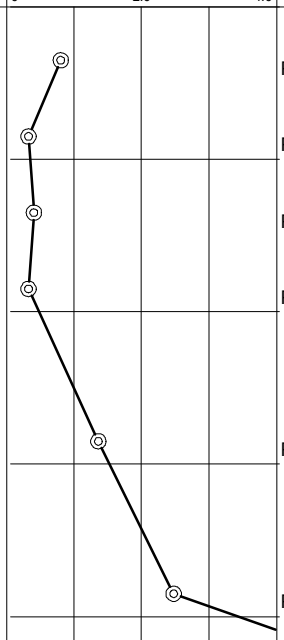

Professional Service Industries, Inc.
5021 West W.T. Harris Boulevard
Charlotte, NC 28269
Telephone: (704) 598-2234

PROJECT NO.: 0511559
PROJECT: Concord City Hall
LOCATION: Cabarrus Ave W at Market St SW
Concord, NC

The stratification lines represent approximate boundaries. The transition may be gradual.

BORING B- 7

DATE STARTED:	4/1/14	**DRILL COMPANY:**	HPC
DATE COMPLETED:	4/1/14	**DRILLER:** J Cain	**LOGGED BY:** Steege
COMPLETION DEPTH	34.0 ft	**DRILL RIG:**	CME 550
BENCHMARK:	N/A	**DRILLING METHOD:**	Hollow Stem Auger
ELEVATION:	694 ft	**SAMPLING METHOD:**	2-in SS
LATITUDE:		**HAMMER TYPE:**	Automatic
LONGITUDE:		**EFFICIENCY**	N/A
STATION: N/A	**OFFSET:** N/A	**REVIEWED BY:**	AOS

Water

While Drilling	10	feet
Upon Completion	21	feet
Delay	21	feet

BORING LOCATION:
See Boring Location Plan

REMARKS: Boreholes backfilled with the auger cuttings after the delay water level measurement.

Elevation (feet)	Depth, (feet)	Sample No.	Recovery (inches)	MATERIAL DESCRIPTION	USCS Classification	SPT Blows per 6-inch (SS)	Moisture, %	Additional Remarks
	0			**TOPSOIL** (2 inches)				
		1	10	**FILL** - Gray/Brown, Clayey Silty SAND (SM) with rock, brick, and coal fragments - moist		3-8-7 N=15		PID=0.5 ppm
690	5	2	16			4-4-8 N=12		PID=1.4 ppm
		3	15	**FILL** - Black, Gray and Brown, Silty SAND (SM) with coal, wood, and rock fragments - moist		8-11-10 N=21		PID=1.6 ppm
685	10	4	3	Hard drilling 7.5 - 8 feet **FILL** - Gray Boulders with soft layers and perched water - wet		50/4" N=100		>> PID=3.3 ppm
680	15	5	18	**RESIDUUM** - Medium Dense, Tan and Gray, Sandy Lean Clay (CL) - wet from perched water above		4-6-8 N=14	17	>> LL = 53 PL = 27 Fines = 39.9% PID=1.8 ppm
675	20	6	18			7-10-10 N=20		PID=1.4 ppm
670	25	7	18	Very Dense, Brown, Silty Fine to Coarse SAND (SM) - moist to wet		8-15-37 N=52		>> PID=3.0 ppm
665	30	8	9	**PARTIALLY WEATHERED ROCK** - Sampled as Brown Silty SAND with weathered rock fragments		8-50/4" N=100		>>
660		9	0	Boring terminated upon auger refusal at 34 feet.		20/0" * N=100		>> * Spoon Bouncing

STANDARD PENETRATION TEST DATA
N in blows/ft ◎
× Moisture ◪ PL ✚ LL
0 25 50
STRENGTH, tsf
▲ Qu ✳ Qp
0 2.0 4.0

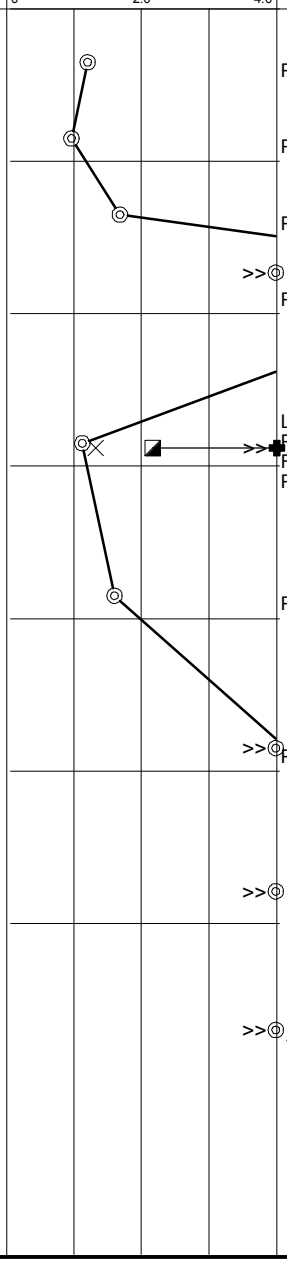

Professional Service Industries, Inc.
5021 West W.T. Harris Boulevard
Charlotte, NC 28269
Telephone: (704) 598-2234

PROJECT NO.: 0511559
PROJECT: Concord City Hall
LOCATION: Cabarrus Ave W at Market St SW
Concord, NC

The stratification lines represent approximate boundaries. The transition may be gradual.

BORING B- 8

DATE STARTED:	4/1/14	**DRILL COMPANY:**	HPC
DATE COMPLETED:	4/1/14	**DRILLER:** J Cain	**LOGGED BY:** Steege
COMPLETION DEPTH	32.0 ft	**DRILL RIG:**	CME 550
BENCHMARK:	N/A	**DRILLING METHOD:**	Hollow Stem Auger
ELEVATION:	700 ft	**SAMPLING METHOD:**	2-in SS
LATITUDE:		**HAMMER TYPE:**	Automatic
LONGITUDE:		**EFFICIENCY**	N/A
STATION: N/A	**OFFSET:** N/A	**REVIEWED BY:**	AOS

Water

While Drilling	31 feet
Upon Completion	31.3 feet
Delay	None feet

BORING LOCATION:
See Boring Location Plan

REMARKS: Borehole backfilled with bentinite after the delay water level measurement.

Elevation (feet)	Depth, (feet)	Sample No.	Recovery (inches)	MATERIAL DESCRIPTION	USCS Classification	SPT Blows per 6-inch (SS)	Moisture, %	Additional Remarks
	0			**TOPSOIL** (3.5 inches)				
		1	16	**FILL** - Brown, Clayey Silty SAND (SM) and Clayey Sandy SILT (ML) with rock fragments - moist		4-5-5 N=10		PID=12.0 ppm
				FILL - Bricks and Rock Fragments				
		2	14	**FILL** - Broan/Gray, Silty SAND (SM) and rock, brick fragments - moist		7-9-7 N=16		PID=7.8 ppm
695	5							
		3	8	**FILL** - Gray, GRAVEL and Silty Sand (GW) - moist		3-3-4 N=7		PID=1.8 ppm
		4	8	**FILL** - Brown/Gray, Clayey SAND (SC) with rock, coal and brick fragments, some wood fragments - moist		3-5-9 N=14		PID=1.5 ppm
690	10							
		5	18	**RESIDUUM** - Very Stiff, Red/Brown, Sandy Fat CLAY (CH) - moist		5-8-10 N=18	24	LL = 52 PL = 28 Fines = 59.7% PID=40.5 ppm
685	15							
				Dense to Very Dense, Brown, Silty Fine to Medium SAND (SM) - moist				
		6	18			10-16-24 N=40		PID=2.1 ppm
680	20							
		7	18			19-28-34 N=62		>> PID=11.5 ppm
675	25							
				Brown/Gray, Sandy SILT (ML) - moist				
		8	18	Very Dense, Brown, Silty Fine to Medium SAND (SM) - moist		6-39-50/6" N=89		>> PID=9.9 ppm
670	30							
		9	0	**PARTIALLY WEATHERED ROCK** - Sampled as Brown Silty SAND with weathered rock fragments - moist, wet at 31 feet		20/0" * N=100		>> * Spoon Bouncing
				Boring terminated upon auger refusal at 32 feet.				

STANDARD PENETRATION TEST DATA
N in blows/ft ◎
× Moisture ◪ PL ✚ LL
0 25 50
STRENGTH, tsf
▲ Qu ✳ Qp
0 2.0 4.0

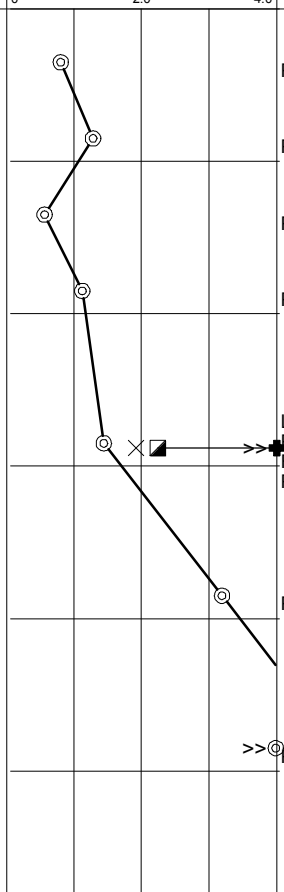

Professional Service Industries, Inc.
5021 West W.T. Harris Boulevard
Charlotte, NC 28269
Telephone: (704) 598-2234

PROJECT NO.: 0511559
PROJECT: Concord City Hall
LOCATION: Cabarrus Ave W at Market St SW
Concord, NC

The stratification lines represent approximate boundaries. The transition may be gradual.

BORING B- 9

DATE STARTED:	4/1/14	**DRILL COMPANY:**	HPC
DATE COMPLETED:	4/1/14	**DRILLER:** J Cain	**LOGGED BY:** Steege
COMPLETION DEPTH	28.5 ft	**DRILL RIG:**	CME 550
BENCHMARK:	N/A	**DRILLING METHOD:**	Hollow Stem Auger
ELEVATION:	696 ft	**SAMPLING METHOD:**	2-in SS
LATITUDE:		**HAMMER TYPE:**	Automatic
LONGITUDE:		**EFFICIENCY**	N/A
STATION: N/A	**OFFSET:** N/A	**REVIEWED BY:**	AOS

Water

While Drilling	27 feet
Upon Completion	25.4 feet
Delay	22.4 feet

BORING LOCATION:
See Boring Location Plan

REMARKS: Temporary piezometer installed to a depth of 28.5 feet. Borehole backfilled with bentinite after the delay water level measurement.

Elevation (feet)	Depth, (feet)	Sample No.	Recovery (inches)	MATERIAL DESCRIPTION	SPT Blows per 6-inch (SS)	Moisture, %	Additional Remarks
	0			**TOPSOIL** (3.5 inches)			
695		1	15	**FILL** - Brown, Silty SAND (SM) and Red/Brown, Elastic SILT (MH) with rock and brick fragments - moist	5-5-3 N=8		PID=3.5 ppm
		2	8	**FILL** - Black/Brown, Topsoil and wood, brick fragments - moist	2-1-8 N=9		PID=11.4 ppm
690	5	3	8	**FILL** - Brown and Red/Brown, Clayey SAND (SC) and Elastic SILT (MH) with rock fragments - moist	3-3-4 N=7		PID=5.2 ppm
		4	18	**RESIDUUM** - Stiff, Red, Sandy Elastic SILT (MH) - moist	4-5-9 N=14	25	LL = 66 PL = 33 Fines = 62.3% PID=8.0 ppm
685	10			Medium Dense, Brown/Red, Clayey SAND (SC) - moist			
		5	18		5-8-12 N=20	21	LL = 67 PL = 42 Fines = 46.1% PID=0.8 ppm
680	15			Medium Dense, Brown and Tan, Silty Fine to Medium SAND (SM) - moist			
		6	18		4-6-9 N=15		PID=3.1 ppm
675	20						
		7	5	**PARTIALLY WEATHERED ROCK** - Sampled as Gray/Tan, Silty SAND with weathered rock fragments - moist, wet at 27 feet	50/6" N=100		PID=5.8 ppm
670	25						
		8	0	Boring terminated upon auger refusal at 28.5 feet.	10/0" * N=100		* Spoon Bouncing

STANDARD PENETRATION TEST DATA
N in blows/ft ◎
× Moisture ◪ PL ✚ LL
0 25 50
STRENGTH, tsf
▲ Qu ✳ Qp
0 2.0 4.0

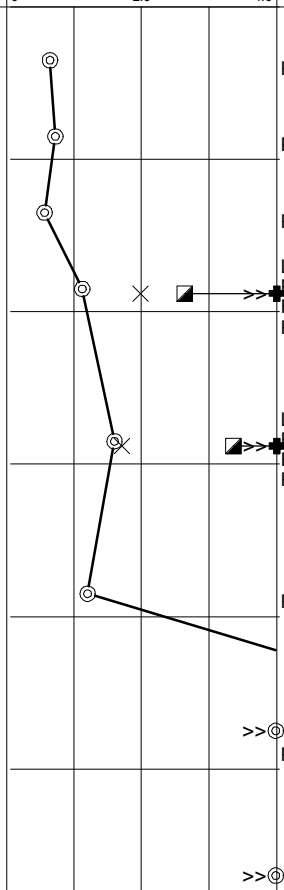

Professional Service Industries, Inc.
5021 West W.T. Harris Boulevard
Charlotte, NC 28269
Telephone: (704) 598-2234

PROJECT NO.: 0511559
PROJECT: Concord City Hall
LOCATION: Cabarrus Ave W at Market St SW
Concord, NC

The stratification lines represent approximate boundaries. The transition may be gradual.

BORING B-10

DATE STARTED:	4/1/14	**DRILL COMPANY:**	HPC
DATE COMPLETED:	4/1/14	**DRILLER:** J Cain	**LOGGED BY:** Steege
COMPLETION DEPTH	30.0 ft	**DRILL RIG:**	CME 550
BENCHMARK:	N/A	**DRILLING METHOD:**	Hollow Stem Auger
ELEVATION:	699 ft	**SAMPLING METHOD:**	2-in SS
LATITUDE:		**HAMMER TYPE:**	Automatic
LONGITUDE:		**EFFICIENCY**	N/A
STATION: N/A	**OFFSET:** N/A	**REVIEWED BY:**	AOS

Water

While Drilling	28 feet
Upon Completion	None feet
Delay	None feet

BORING LOCATION:
See Boring Location Plan

REMARKS: Borehole backfilled with bentinite after the delay water level measurement.

Elevation (feet)	Depth, (feet)	Sample No.	Recovery (inches)	MATERIAL DESCRIPTION	USCS Classification	SPT Blows per 6-inch (SS)	Additional Remarks
	0			**TOPSOIL** (3 inches)			
		1	16	**FILL** - Brown/Gray, Clayey Silty SAND (SM) with brick and rock fragments - moist		6-4-8 N=12	PID=23.0 ppm
695	5	2	12	**FILL** - Boulders		3-24-50/2" N=100	>> PID=11.1 ppm
		3	18	**FILL** - Brown, Clayey Silty SAND (SM) and Clayey Sandy SILT (ML) with small rock fragments - moist		4-4-6 N=10	PID=2.1 ppm
690	10	4	18	**FILL** - Red Bricks and Silty Sand - moist **RESIDUUM** - Brown/Tan, Sandy Lean CLAY (CL) - moist		20-14-7 N=21	PID=0.9 ppm
685	15	5	16	Medium Dense, Brown/Tan and Gray, Clayey Fine SAND (SC) with some weathered rock lenses - moist		15-12-12 N=24	PID=0.2 ppm
680	20	6	18			7-10-11 N=21	PID=100.0 ppm
675	25	7	18	Medium Dense, Brown/Gray, Silty Fine to Coarse SAND (SM) with clay - moist to slightly wet		5-7-9 N=16	PID=75.0 ppm
670	30	8	0	**PARTIALLY WEATHERED ROCK** - Sampled as Gray/Brown, Silty SAND - wet		50/1" N=100	>>
				Boring terminated upon auger refusal at 30 feet.			

STANDARD PENETRATION TEST DATA
N in blows/ft ◎
× Moisture ◪ PL ✚ LL
0 25 50
STRENGTH, tsf
▲ Qu ✳ Qp
0 2.0 4.0

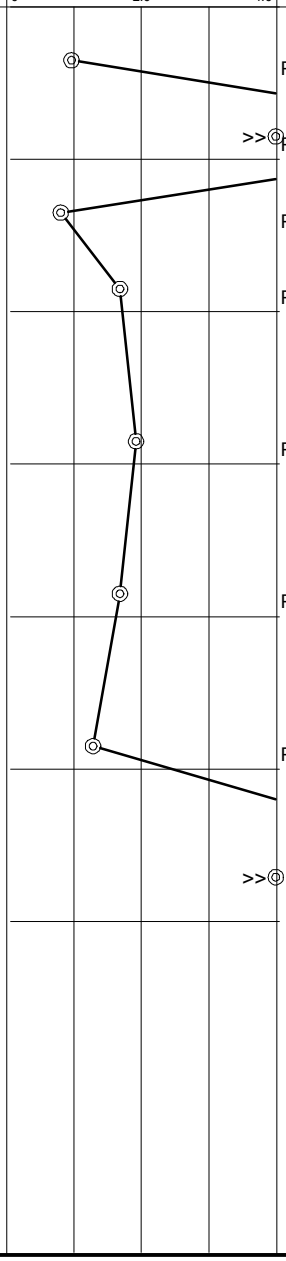

Professional Service Industries, Inc.
5021 West W.T. Harris Boulevard
Charlotte, NC 28269
Telephone: (704) 598-2234

PROJECT NO.: 0511559
PROJECT: Concord City Hall
LOCATION: Cabarrus Ave W at Market St SW
Concord, NC

The stratification lines represent approximate boundaries. The transition may be gradual.

BORING B-11

DATE STARTED:	4/2/14	**DRILL COMPANY:**	HPC
DATE COMPLETED:	4/2/14	**DRILLER:** J Cain	**LOGGED BY:** Steege
COMPLETION DEPTH	18.5 ft	**DRILL RIG:**	CME 550
BENCHMARK:	N/A	**DRILLING METHOD:**	Hollow Stem Auger
ELEVATION:	702 ft	**SAMPLING METHOD:**	2-in SS
LATITUDE:		**HAMMER TYPE:**	Automatic
LONGITUDE:		**EFFICIENCY**	N/A
STATION: N/A	**OFFSET:** N/A	**REVIEWED BY:**	AOS

Water

While Drilling	None	feet
Upon Completion	None	feet
Delay	None	feet

BORING LOCATION:
See Boring Location Plan

REMARKS: Borehole backfilled with bentinite after the delay water level measurement.

Elevation (feet)	Depth, (feet)	Sample No.	Recovery (inches)	MATERIAL DESCRIPTION	SPT Blows per 6-inch (SS)	Additional Remarks
	0			**BRICK PAVER**		
				GRAVEL		
700		1	12	**FILL** - Brown, Clayey Silty SAND (SM) and Gravel - moist Geotextile at 2 feet	7-6-18 N=24	PID=1.5 ppm
	5	2	10	**FILL** - Gray Gravel - moist	5-6-6 N=12	
695		3	12		7-7-6 N=13	PID=2.4 ppm
	10	4	6	**FILL** - Tan, Clayey Sandy SILT (ML) and Gravel - moist	2-2-4 N=6	PID=4.1 ppm
690				**RESIDUUM** - Loose, Tan/Gray, Silty Fine to Medium SAND (SM) - moist		
	15	5	14		3-4-5 N=9	PID=27.0 ppm
685		6	0	Boring terminated upon auger refusal at 18.5 feet. No hard drilling noted above 18.5 feet.	20/0" * N=100	>>◎* Spoon Bouncing

STANDARD PENETRATION TEST DATA
N in blows/ft ◎
× Moisture ◪ PL ✚ LL
0 25 50
STRENGTH, tsf
▲ Qu ✳ Qp
0 2.0 4.0

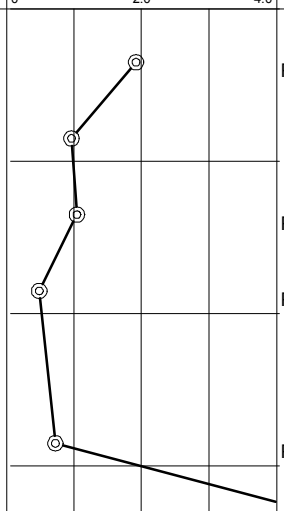

Professional Service Industries, Inc.
5021 West W.T. Harris Boulevard
Charlotte, NC 28269
Telephone: (704) 598-2234

PROJECT NO.: 0511559
PROJECT: Concord City Hall
LOCATION: Cabarrus Ave W at Market St SW
Concord, NC

The stratification lines represent approximate boundaries. The transition may be gradual.

BORING B-12

DATE STARTED:	4/2/14	**DRILL COMPANY:**	HPC
DATE COMPLETED:	4/2/14	**DRILLER:** J Cain	**LOGGED BY:** Steege
COMPLETION DEPTH	8.5 ft	**DRILL RIG:**	CME 550
BENCHMARK:	N/A	**DRILLING METHOD:**	Hollow Stem Auger
ELEVATION:	701 ft	**SAMPLING METHOD:**	2-in SS
LATITUDE:		**HAMMER TYPE:**	Automatic
LONGITUDE:		**EFFICIENCY**	N/A
STATION: N/A	**OFFSET:** N/A	**REVIEWED BY:**	AOS

Water

While Drilling	None feet
Upon Completion	None feet
Delay	N/A

BORING LOCATION:
See Boring Location Plan

REMARKS: Boreholes backfilled with the auger cuttings upon completion.

Elevation (feet)	Depth, (feet)	Graphic Log	Sample Type	Sample No.	Recovery (inches)	MATERIAL DESCRIPTION	USCS Classification	SPT Blows per 6-inch (SS)	Moisture, %	STANDARD PENETRATION TEST DATA N in blows/ft ◎ × Moisture ◪ PL ✚ LL (0 – 25 – 50) STRENGTH, tsf ▲ Qu ✳ Qp (0 – 2.0 – 4.0)	Additional Remarks
	0					**TOPSOIL** (4 inches)					
700				1	2	**FILL** - Brown, Silty SAND (SM) with rock and asphalt fragments - moist		6-5-3 N=8			PID=1.3 ppm
	5			2	10	**FILL** - Brown/Red, Sandy Elastic SILT (MH) with rock fragments - moist		3-1-4 N=5			PID=4.0 ppm
695				3	12	**FILL** - Brown/Red, Sandy Elastic SILT (MH) with roots and small wood fragments - moist		0-0-2 N=2			PID=7.5 ppm
				4	0	Boring terminated upon auger refusal at 8.5 feet.		50/1" N=100		>>	

After refusal B-12 was offset approximately 6 feet southeast and redrilled as an auger probe to 8.5 feet with similar results (auger refusal at 8.5 feet). Refusal appears to be on concrete.

Professional Service Industries, Inc.
5021 West W.T. Harris Boulevard
Charlotte, NC 28269
Telephone: (704) 598-2234

PROJECT NO.: 0511559
PROJECT: Concord City Hall
LOCATION: Cabarrus Ave W at Market St SW
Concord, NC

The stratification lines represent approximate boundaries. The transition may be gradual.

BORING B-13

DATE STARTED:	4/2/14	**DRILL COMPANY:**	HPC
DATE COMPLETED:	4/2/14	**DRILLER:** J Cain	**LOGGED BY:** Steege
COMPLETION DEPTH	31.5 ft	**DRILL RIG:**	CME 550
BENCHMARK:	N/A	**DRILLING METHOD:**	Hollow Stem Auger
ELEVATION:	701 ft	**SAMPLING METHOD:**	2-in SS
LATITUDE:		**HAMMER TYPE:**	Automatic
LONGITUDE:		**EFFICIENCY**	N/A
STATION: N/A	**OFFSET:** N/A	**REVIEWED BY:**	AOS

Water

While Drilling	None	feet
Upon Completion	None	feet
Delay	None	feet

BORING LOCATION:
See Boring Location Plan

REMARKS: Borehole backfilled with bentinite after the delay water level measurement.

Elevation (feet)	Depth, (feet)	Sample No.	Recovery (inches)	MATERIAL DESCRIPTION	USCS Classification	SPT Blows per 6-inch (SS)	Moisture, %	Additional Remarks
	0			**TOPSOIL** (3.5 inches)				
700		1	18	**FILL** - Brown, Clayey Silty SAND (SM) and Sandy Elastic SILT (MH) with rock, brick, and concrete fragments - moist		5-6-6 N=12		PID=10.0 ppm
	5	2	18			3-3-1 N=4		PID=18.6 ppm
695		3	18	**RESIDUUM** - Medium Stiff, Brown, Clayey Sandy SILT (ML) - moist		3-3-4 N=7		PID=19.4 ppm
	10	4	18	Stiff, Brown/Red, Sandy Elastic SILT (MH) - moist Streak of hard drilling at 12 feet		3-5-6 N=11		PID=20.2 ppm
690				Medium Dense, Brown/Tan, Clayey SAND (SC) interbedded with Sandy Lean CLAY (CL) - moist				
	15	5	18			7-8-6 N=14		PID=38.4 ppm
685				Medium Dense, Tan/Brown, Silty Fine to Coarse SAND (SM) - moist				
	20	6	18			4-6-9 N=15		PID=26.4 ppm
680								
	25	7	18			5-9-10 N=19		PID=21.3 ppm
675								
	30	8	16			11-7-19 N=26		PID=126.0 ppm
670		9	0	**PARTIALLY WEATHERED ROCK** - Not Recovered Boring terminated upon auger refusal at 31.5 feet. Initial boring encountered auger refusal at about 5 feet on concrete. B-13 was then offset about 5 feet south and redrilled.		10/0" * N=100		>>* Spoon Bouncing

STANDARD PENETRATION TEST DATA
N in blows/ft ◎
× Moisture ◪ PL ✚ LL
0 25 50
STRENGTH, tsf
▲ Qu ✳ Qp
0 2.0 4.0

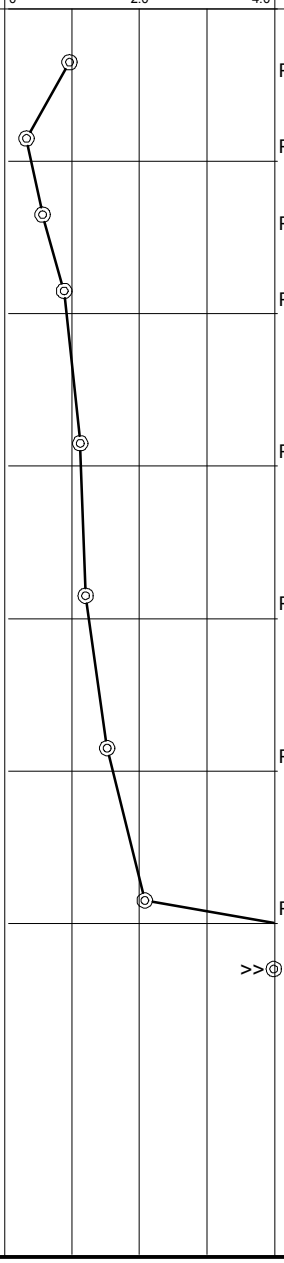

Professional Service Industries, Inc.
5021 West W.T. Harris Boulevard
Charlotte, NC 28269
Telephone: (704) 598-2234

PROJECT NO.: 0511559
PROJECT: Concord City Hall
LOCATION: Cabarrus Ave W at Market St SW
Concord, NC

The stratification lines represent approximate boundaries. The transition may be gradual.

SUBSURFACE PROFILES

SE NW

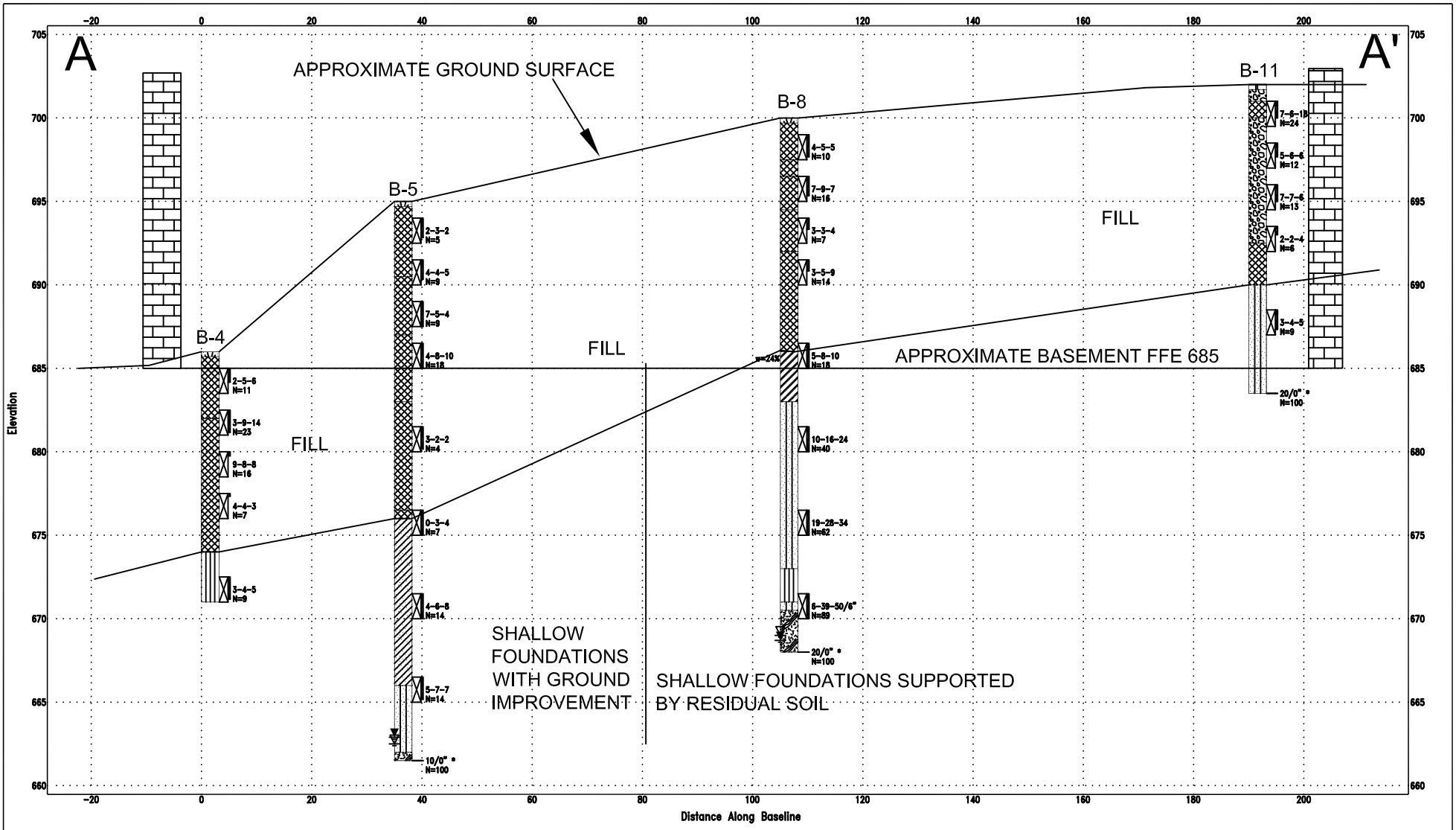

Professional Service Industries, Inc. 5021 West W.T. Harris Boulevard Charlotte, NC 28269	Profile A - A'	Concord City Hall PSI Project Number: 0511559	Cabarrus Ave W at Market St SW Concord, NC

SE NW

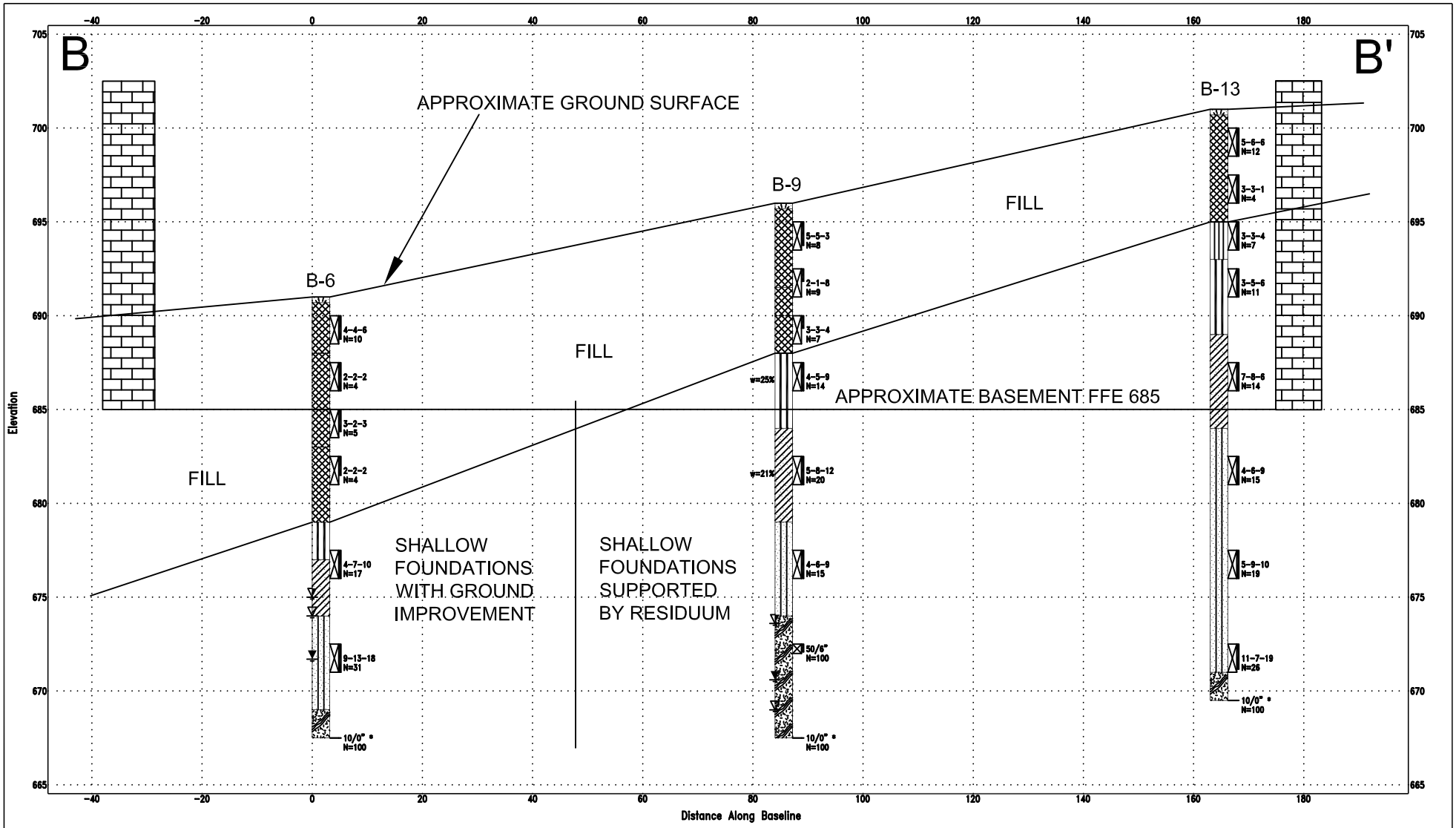

Professional Service Industries, Inc.
5021 West W.T. Harris Boulevard
Charlotte, NC 28269

Profile B - B'

Concord City Hall
PSI Project Number: 0511559

Cabarrus Ave W at Market St SW
Concord, NC

FOUNDATION PLAN

Approximate boundary between shallow foundations supported by the residual soils (>) and shallow foundations with ground improvement (<)

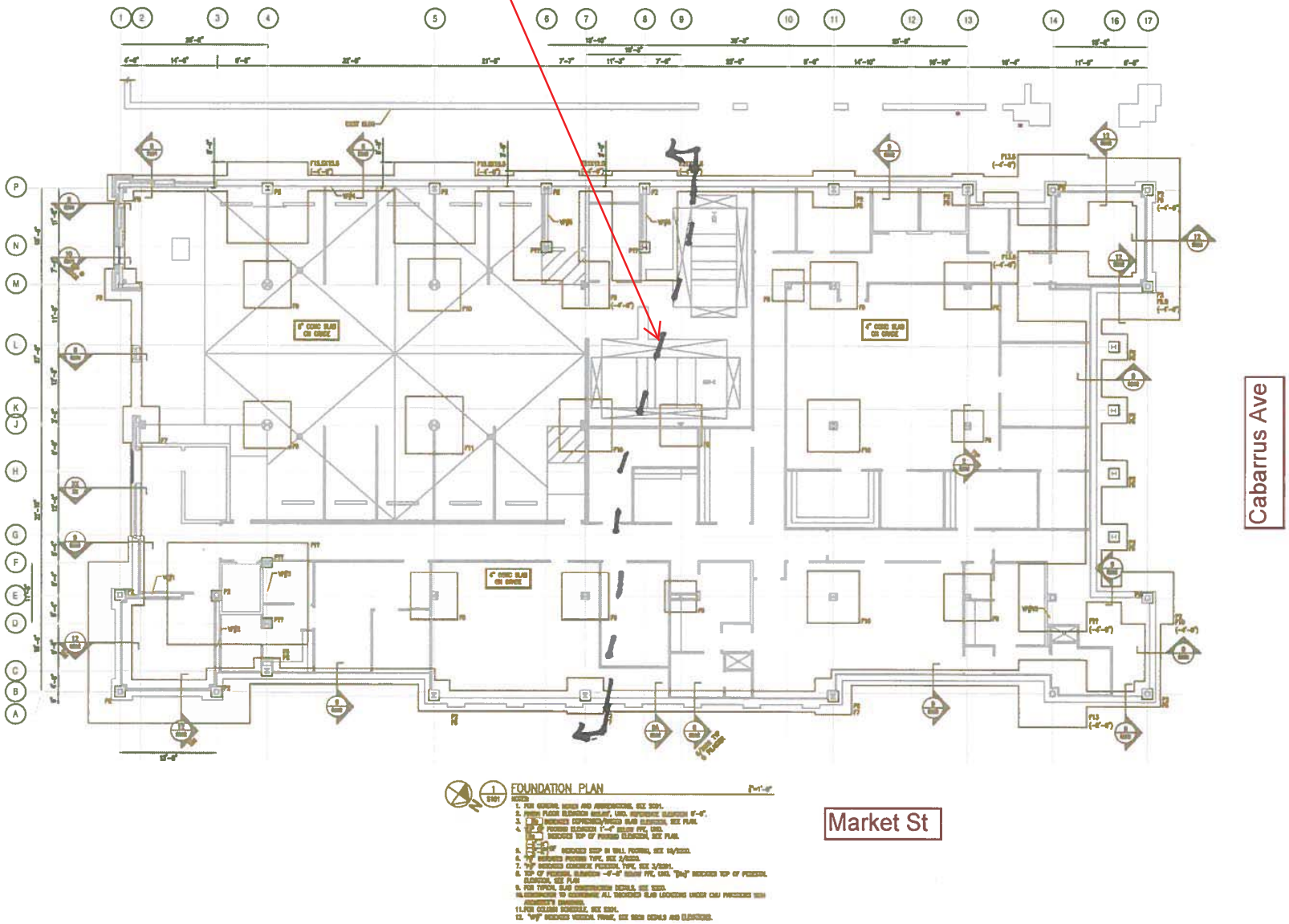

SECTION 00 72 00 – GENERAL CONDITIONS OF THE CONTRACT FOR CONSTRUCTION

AIA DOCUMENT A201

AIA® Document A201™ – 2007

General Conditions of the Contract for Construction

for the following PROJECT:
(Name and location or address)
Concord City Hall

THE OWNER:
(Name, legal status and address)
City of Concord
P.O. Box 308
Concord, NC 28026

THE ARCHITECT:
(Name, legal status and address)
ADW Architects, PA
101 W Worthington Avenue
Suite 270
Charlotte, NC 28203

ADDITIONS AND DELETIONS:
The author of this document has added information needed for its completion. The author may also have revised the text of the original AIA standard form. An *Additions and Deletions Report* that notes added information as well as revisions to the standard form text is available from the author and should be reviewed. A vertical line in the left margin of this document indicates where the author has added necessary information and where the author has added to or deleted from the original AIA text.

This document has important legal consequences. Consultation with an attorney is encouraged with respect to its completion or modification.

TABLE OF ARTICLES

1 GENERAL PROVISIONS

2 OWNER

3 CONTRACTOR

4 ARCHITECT

5 SUBCONTRACTORS

6 CONSTRUCTION BY OWNER OR BY SEPARATE CONTRACTORS

7 CHANGES IN THE WORK

8 TIME

9 PAYMENTS AND COMPLETION

10 PROTECTION OF PERSONS AND PROPERTY

11 INSURANCE AND BONDS

12 UNCOVERING AND CORRECTION OF WORK

13 MISCELLANEOUS PROVISIONS

14 TERMINATION OR SUSPENSION OF THE CONTRACT

15 CLAIMS AND DISPUTES

Init.
/

AIA Document A201™ – 2007. Copyright © 1911, 1915, 1918, 1925, 1937, 1951, 1958, 1961, 1963, 1966, 1970, 1976, 1987, 1997 and 2007 by The American Institute of Architects. **All rights reserved. WARNING: This AIA® Document is protected by U.S. Copyright Law and International Treaties. Unauthorized reproduction or distribution of this AIA® Document, or any portion of it, may result in severe civil and criminal penalties, and will be prosecuted to the maximum extent possible under the law.** This document was produced by AIA software at 13:31:35 on 05/08/2014 under Order No.9101999414_1 which expires on 12/08/2014, and is not for resale.
User Notes:

INDEX
(Topics and numbers in bold are section headings.)

Acceptance of Nonconforming Work
9.6.6, 9.9.3, **12.3**
Acceptance of Work
9.6.6, 9.8.2, 9.9.3, 9.10.1, 9.10.3, 12.3
Access to Work
3.16, 6.2.1, 12.1
Accident Prevention
10
Acts and Omissions
3.2, 3.3.2, 3.12.8, 3.18, 4.2.3, 8.3.1, 9.5.1, 10.2.5, 10.2.8, 13.4.2, 13.7, 14.1, 15.2
Addenda
1.1.1, 3.11
Additional Costs, Claims for
3.7.4, 3.7.5, 6.1.1, 7.3.7.5, 10.3, 15.1.4
Additional Inspections and Testing
9.4.2, 9.8.3, 12.2.1, **13.5**
Additional Insured
11.1.4
Additional Time, Claims for
3.2.4, 3.7.4, 3.7.5, 3.10.2, 8.3.2, **15.1.5**
Administration of the Contract
3.1.3, **4.2**, 9.4, 9.5
Advertisement or Invitation to Bid
1.1.1
Aesthetic Effect
4.2.13
Allowances
3.8, 7.3.8
All-risk Insurance
11.3.1, 11.3.1.1
Applications for Payment
4.2.5, 7.3.9, 9.2, **9.3**, 9.4, 9.5.1, 9.6.3, 9.7, 9.10, 11.1.3
Approvals
2.1.1, 2.2.2, 2.4, 3.1.3, 3.10.2, 3.12.8, 3.12.9, 3.12.10, 4.2.7, 9.3.2, 13.5.1
Arbitration
8.3.1, 11.3.10, 13.1, 15.3.2, **15.4**
ARCHITECT
4
Architect, Definition of
4.1.1
Architect, Extent of Authority
2.4, 3.12.7, 4.1, 4.2, 5.2, 6.3, 7.1.2, 7.3.7, 7.4, 9.2, 9.3.1, 9.4, 9.5, 9.6.3, 9.8, 9.10.1, 9.10.3, 12.1, 12.2.1, 13.5.1, 13.5.2, 14.2.2, 14.2.4, 15.1.3, 15.2.1
Architect, Limitations of Authority and Responsibility
2.1.1, 3.12.4, 3.12.8, 3.12.10, 4.1.2, 4.2.1, 4.2.2, 4.2.3, 4.2.6, 4.2.7, 4.2.10, 4.2.12, 4.2.13, 5.2.1, 7.4, 9.4.2, 9.5.3, 9.6.4, 15.1.3, 15.2
Architect's Additional Services and Expenses
2.4, 11.3.1.1, 12.2.1, 13.5.2, 13.5.3, 14.2.4
Architect's Administration of the Contract
3.1.3, 4.2, 3.7.4, 15.2, 9.4.1, 9.5
Architect's Approvals
2.4, 3.1.3, 3.5, 3.10.2, 4.2.7
Architect's Authority to Reject Work
3.5, 4.2.6, 12.1.2, 12.2.1
Architect's Copyright
1.1.7, 1.5
Architect's Decisions
3.7.4, 4.2.6, 4.2.7, 4.2.11, 4.2.12, 4.2.13, 4.2.14, 6.3, 7.3.7, 7.3.9, 8.1.3, 8.3.1, 9.2, 9.4.1, 9.5, 9.8.4, 9.9.1, 13.5.2, 15.2, 15.3
Architect's Inspections
3.7.4, 4.2.2, 4.2.9, 9.4.2, 9.8.3, 9.9.2, 9.10.1, 13.5
Architect's Instructions
3.2.4, 3.3.1, 4.2.6, 4.2.7, 13.5.2
Architect's Interpretations
4.2.11, 4.2.12
Architect's Project Representative
4.2.10
Architect's Relationship with Contractor
1.1.2, 1.5, 3.1.3, 3.2.2, 3.2.3, 3.2.4, 3.3.1, 3.4.2, 3.5, 3.7.4, 3.7.5, 3.9.2, 3.9.3, 3.10, 3.11, 3.12, 3.16, 3.18, 4.1.2, 4.1.3, 4.2, 5.2, 6.2.2, 7, 8.3.1, 9.2, 9.3, 9.4, 9.5, 9.7, 9.8, 9.9, 10.2.6, 10.3, 11.3.7, 12, 13.4.2, 13.5, 15.2
Architect's Relationship with Subcontractors
1.1.2, 4.2.3, 4.2.4, 4.2.6, 9.6.3, 9.6.4, 11.3.7
Architect's Representations
9.4.2, 9.5.1, 9.10.1
Architect's Site Visits
3.7.4, 4.2.2, 4.2.9, 9.4.2, 9.5.1, 9.9.2, 9.10.1, 13.5
Asbestos
10.3.1
Attorneys' Fees
3.18.1, 9.10.2, 10.3.3
Award of Separate Contracts
6.1.1, 6.1.2
Award of Subcontracts and Other Contracts for Portions of the Work
5.2
Basic Definitions
1.1
Bidding Requirements
1.1.1, 5.2.1, 11.4.1
Binding Dispute Resolution
9.7, 11.3.9, 11.3.10, 13.1, 15.2.5, 15.2.6.1, 15.3.1, 15.3.2, 15.4.1
Boiler and Machinery Insurance
11.3.2
Bonds, Lien
7.3.7.4, 9.10.2, 9.10.3
Bonds, Performance, and Payment
7.3.7.4, 9.6.7, 9.10.3, 11.3.9, **11.4**
Building Permit
3.7.1

AIA Document A201™ – 2007. Copyright © 1911, 1915, 1918, 1925, 1937, 1951, 1958, 1961, 1963, 1966, 1970, 1976, 1987, 1997 and 2007 by The American Institute of Architects. **All rights reserved. WARNING: This AIA® Document is protected by U.S. Copyright Law and International Treaties. Unauthorized reproduction or distribution of this AIA® Document, or any portion of it, may result in severe civil and criminal penalties, and will be prosecuted to the maximum extent possible under the law.** This document was produced by AIA software at 13:31:35 on 05/08/2014 under Order No.9101999414_1 which expires on 12/08/2014, and is not for resale.
User Notes:
(1397174123)

Capitalization
1.3
Certificate of Substantial Completion
9.8.3, 9.8.4, 9.8.5
Certificates for Payment
4.2.1, 4.2.5, 4.2.9, 9.3.3, **9.4**, 9.5, 9.6.1, 9.6.6, 9.7, 9.10.1, 9.10.3, 14.1.1.3, 14.2.4, 15.1.3
Certificates of Inspection, Testing or Approval
13.5.4
Certificates of Insurance
9.10.2, 11.1.3
Change Orders
1.1.1, 2.4, 3.4.2, 3.7.4, 3.8.2.3, 3.11, 3.12.8, 4.2.8, 5.2.3, 7.1.2, 7.1.3, **7.2**, 7.3.2, 7.3.6, 7.3.9, 7.3.10, 8.3.1, 9.3.1.1, 9.10.3, 10.3.2, 11.3.1.2, 11.3.4, 11.3.9, 12.1.2, 15.1.3
Change Orders, Definition of
7.2.1
CHANGES IN THE WORK
2.2.1, 3.11, 4.2.8, **7**, 7.2.1, 7.3.1, 7.4, 8.3.1, 9.3.1.1, 11.3.9
Claims, Definition of
15.1.1
CLAIMS AND DISPUTES
3.2.4, 6.1.1, 6.3, 7.3.9, 9.3.3, 9.10.4, 10.3.3, **15**, 15.4
Claims and Timely Assertion of Claims
15.4.1
Claims for Additional Cost
3.2.4, 3.7.4, 6.1.1, 7.3.9, 10.3.2, **15.1.4**
Claims for Additional Time
3.2.4, 3.7.4, 6.1.1, 8.3.2, 10.3.2, **15.1.5**
Concealed or Unknown Conditions, Claims for
3.7.4
Claims for Damages
3.2.4, 3.18, 6.1.1, 8.3.3, 9.5.1, 9.6.7, 10.3.3, 11.1.1, 11.3.5, 11.3.7, 14.1.3, 14.2.4, 15.1.6
Claims Subject to Arbitration
15.3.1, 15.4.1
Cleaning Up
3.15, 6.3
Commencement of the Work, Conditions Relating to
2.2.1, 3.2.2, 3.4.1, 3.7.1, 3.10.1, 3.12.6, 5.2.1, 5.2.3, 6.2.2, 8.1.2, 8.2.2, 8.3.1, 11.1, 11.3.1, 11.3.6, 11.4.1, 15.1.4
Commencement of the Work, Definition of
8.1.2
Communications Facilitating Contract Administration
3.9.1, **4.2.4**
Completion, Conditions Relating to
3.4.1, 3.11, 3.15, 4.2.2, 4.2.9, 8.2, 9.4.2, 9.8, 9.9.1, 9.10, 12.2, 13.7, 14.1.2
COMPLETION, PAYMENTS AND
9
Completion, Substantial
4.2.9, 8.1.1, 8.1.3, 8.2.3, 9.4.2, 9.8, 9.9.1, 9.10.3, 12.2, 13.7
Compliance with Laws
1.6, 3.2.3, 3.6, 3.7, 3.12.10, 3.13, 4.1.1, 9.6.4, 10.2.2, 11.1, 11.3, 13.1, 13.4, 13.5.1, 13.5.2, 13.6, 14.1.1, 14.2.1.3, 15.2.8, 15.4.2, 15.4.3
Concealed or Unknown Conditions
3.7.4, 4.2.8, 8.3.1, 10.3
Conditions of the Contract
1.1.1, 6.1.1, 6.1.4
Consent, Written
3.4.2, 3.7.4, 3.12.8, 3.14.2, 4.1.2, 9.3.2, 9.8.5, 9.9.1, 9.10.2, 9.10.3, 11.3.1, 13.2, 13.4.2, 15.4.4.2
Consolidation or Joinder
15.4.4
CONSTRUCTION BY OWNER OR BY SEPARATE CONTRACTORS
1.1.4, **6**
Construction Change Directive, Definition of
7.3.1
Construction Change Directives
1.1.1, 3.4.2, 3.12.8, 4.2.8, 7.1.1, 7.1.2, 7.1.3, **7.3**, 9.3.1.1
Construction Schedules, Contractor's
3.10, 3.12.1, 3.12.2, 6.1.3, 15.1.5.2
Contingent Assignment of Subcontracts
5.4, 14.2.2.2
Continuing Contract Performance
15.1.3
Contract, Definition of
1.1.2
CONTRACT, TERMINATION OR SUSPENSION OF THE
5.4.1.1, 11.3.9, **14**
Contract Administration
3.1.3, 4, 9.4, 9.5
Contract Award and Execution, Conditions Relating to
3.7.1, 3.10, 5.2, 6.1, 11.1.3, 11.3.6, 11.4.1
Contract Documents, Copies Furnished and Use of
1.5.2, 2.2.5, 5.3
Contract Documents, Definition of
1.1.1
Contract Sum
3.7.4, 3.8, 5.2.3, 7.2, 7.3, 7.4, **9.1**, 9.4.2, 9.5.1.4, 9.6.7, 9.7, 10.3.2, 11.3.1, 14.2.4, 14.3.2, 15.1.4, 15.2.5
Contract Sum, Definition of
9.1
Contract Time
3.7.4, 3.7.5, 3.10.2, 5.2.3, 7.2.1.3, 7.3.1, 7.3.5, 7.4, 8.1.1, 8.2.1, 8.3.1, 9.5.1, 9.7, 10.3.2, 12.1.1, 14.3.2, 15.1.5.1, 15.2.5
Contract Time, Definition of
8.1.1
CONTRACTOR
3
Contractor, Definition of
3.1, 6.1.2

Init.
/
AIA Document A201™ – 2007. Copyright © 1911, 1915, 1918, 1925, 1937, 1951, 1958, 1961, 1963, 1966, 1970, 1976, 1987, 1997 and 2007 by The American Institute of Architects. **All rights reserved. WARNING: This AIA® Document is protected by U.S. Copyright Law and International Treaties. Unauthorized reproduction or distribution of this AIA® Document, or any portion of it, may result in severe civil and criminal penalties, and will be prosecuted to the maximum extent possible under the law.** This document was produced by AIA software at 13:15:40 on 05/08/2014 under Order No.9101999414_1 which expires on 12/08/2014, and is not for resale.
User Notes:

(1919367023)

Contractor's Construction Schedules
3.10, 3.12.1, 3.12.2, 6.1.3, 15.1.5.2
Contractor's Employees
3.3.2, 3.4.3, 3.8.1, 3.9, 3.18.2, 4.2.3, 4.2.6, 10.2, 10.3, 11.1.1, 11.3.7, 14.1, 14.2.1.1
Contractor's Liability Insurance
11.1
Contractor's Relationship with Separate Contractors and Owner's Forces
3.12.5, 3.14.2, 4.2.4, 6, 11.3.7, 12.1.2, 12.2.4
Contractor's Relationship with Subcontractors
1.2.2, 3.3.2, 3.18.1, 3.18.2, 5, 9.6.2, 9.6.7, 9.10.2, 11.3.1.2, 11.3.7, 11.3.8
Contractor's Relationship with the Architect
1.1.2, 1.5, 3.1.3, 3.2.2, 3.2.3, 3.2.4, 3.3.1, 3.4.2, 3.5, 3.7.4, 3.10, 3.11, 3.12, 3.16, 3.18, 4.1.3, 4.2, 5.2, 6.2.2, 7, 8.3.1, 9.2, 9.3, 9.4, 9.5, 9.7, 9.8, 9.9, 10.2.6, 10.3, 11.3.7, 12, 13.5, 15.1.2, 15.2.1
Contractor's Representations
3.2.1, 3.2.2, 3.5, 3.12.6, 6.2.2, 8.2.1, 9.3.3, 9.8.2
Contractor's Responsibility for Those Performing the Work
3.3.2, 3.18, 5.3, 6.1.3, 6.2, 9.5.1, 10.2.8
Contractor's Review of Contract Documents
3.2
Contractor's Right to Stop the Work
9.7
Contractor's Right to Terminate the Contract
14.1, 15.1.6
Contractor's Submittals
3.10, 3.11, 3.12.4, 4.2.7, 5.2.1, 5.2.3, 9.2, 9.3, 9.8.2, 9.8.3, 9.9.1, 9.10.2, 9.10.3, 11.1.3, 11.4.2
Contractor's Superintendent
3.9, 10.2.6
Contractor's Supervision and Construction Procedures
1.2.2, 3.3, 3.4, 3.12.10, 4.2.2, 4.2.7, 6.1.3, 6.2.4, 7.1.3, 7.3.5, 7.3.7, 8.2, 10, 12, 14, 15.1.3
Contractual Liability Insurance
11.1.1.8, 11.2
Coordination and Correlation
1.2, 3.2.1, 3.3.1, 3.10, 3.12.6, 6.1.3, 6.2.1
Copies Furnished of Drawings and Specifications
1.5, 2.2.5, 3.11
Copyrights
1.5, **3.17**
Correction of Work
2.3, 2.4, 3.7.3, 9.4.2, 9.8.2, 9.8.3, 9.9.1, 12.1.2, **12.2**
Correlation and Intent of the Contract Documents
1.2
Cost, Definition of
7.3.7
Costs
2.4, 3.2.4, 3.7.3, 3.8.2, 3.15.2, 5.4.2, 6.1.1, 6.2.3, 7.3.3.3, 7.3.7, 7.3.8, 7.3.9, 9.10.2, 10.3.2, 10.3.6, 11.3, 12.1.2, 12.2.1, 12.2.4, 13.5, 14
Cutting and Patching
3.14, 6.2.5
Damage to Construction of Owner or Separate Contractors
3.14.2, 6.2.4, 10.2.1.2, 10.2.5, 10.4, 11.1.1, 11.3, 12.2.4
Damage to the Work
3.14.2, 9.9.1, 10.2.1.2, 10.2.5, 10.4, 11.3.1, 12.2.4
Damages, Claims for
3.2.4, 3.18, 6.1.1, 8.3.3, 9.5.1, 9.6.7, 10.3.3, 11.1.1, 11.3.5, 11.3.7, 14.1.3, 14.2.4, 15.1.6
Damages for Delay
6.1.1, 8.3.3, 9.5.1.6, 9.7, 10.3.2
Date of Commencement of the Work, Definition of
8.1.2
Date of Substantial Completion, Definition of
8.1.3
Day, Definition of
8.1.4
Decisions of the Architect
3.7.4, 4.2.6, 4.2.7, 4.2.11, 4.2.12, 4.2.13, 15.2, 6.3, 7.3.7, 7.3.9, 8.1.3, 8.3.1, 9.2, 9.4, 9.5.1, 9.8.4, 9.9.1, 13.5.2, 14.2.2, 14.2.4, 15.1, 15.2
Decisions to Withhold Certification
9.4.1, **9.5**, 9.7, 14.1.1.3
Defective or Nonconforming Work, Acceptance, Rejection and Correction of
2.3, 2.4, 3.5, 4.2.6, 6.2.5, 9.5.1, 9.5.2, 9.6.6, 9.8.2, 9.9.3, 9.10.4, 12.2.1
Definitions
1.1, 2.1.1, 3.1.1, 3.5, 3.12.1, 3.12.2, 3.12.3, 4.1.1, 15.1.1, 5.1, 6.1.2, 7.2.1, 7.3.1, 8.1, 9.1, 9.8.1
Delays and Extensions of Time
3.2, 3.7.4, 5.2.3, 7.2.1, 7.3.1, 7.4, **8.3**, 9.5.1, 9.7, 10.3.2, 10.4, 14.3.2, 15.1.5, 15.2.5
Disputes
6.3, 7.3.9, 15.1, 15.2
Documents and Samples at the Site
3.11
Drawings, Definition of
1.1.5
Drawings and Specifications, Use and Ownership of
3.11
Effective Date of Insurance
8.2.2, 11.1.2
Emergencies
10.4, 14.1.1.2, 15.1.4
Employees, Contractor's
3.3.2, 3.4.3, 3.8.1, 3.9, 3.18.2, 4.2.3, 4.2.6, 10.2, 10.3.3, 11.1.1, 11.3.7, 14.1, 14.2.1.1
Equipment, Labor, Materials or
1.1.3, 1.1.6, 3.4, 3.5, 3.8.2, 3.8.3, 3.12, 3.13, 3.15.1, 4.2.6, 4.2.7, 5.2.1, 6.2.1, 7.3.7, 9.3.2, 9.3.3, 9.5.1.3, 9.10.2, 10.2.1, 10.2.4, 14.2.1.1, 14.2.1.2

AIA Document A201™ – 2007. Copyright © 1911, 1915, 1918, 1925, 1937, 1951, 1958, 1961, 1963, 1966, 1970, 1976, 1987, 1997 and 2007 by The American Institute of Architects. **All rights reserved. WARNING: This AIA® Document is protected by U.S. Copyright Law and International Treaties. Unauthorized reproduction or distribution of this AIA® Document, or any portion of it, may result in severe civil and criminal penalties, and will be prosecuted to the maximum extent possible under the law.** This document was produced by AIA software at 13:15:40 on 05/08/2014 under Order No.9101999414_1 which expires on 12/08/2014, and is not for resale.
User Notes:

Execution and Progress of the Work
1.1.3, 1.2.1, 1.2.2, 2.2.3, 2.2.5, 3.1, 3.3.1, 3.4.1, 3.5, 3.7.1, 3.10.1, 3.12, 3.14, 4.2, 6.2.2, 7.1.3, 7.3.5, 8.2, 9.5.1, 9.9.1, 10.2, 10.3, 12.2, 14.2, 14.3.1, 15.1.3
Extensions of Time
3.2.4, 3.7.4, 5.2.3, 7.2.1, 7.3, 7.4, 9.5.1, 9.7, 10.3.2, 10.4, 14.3, 15.1.5, 15.2.5
Failure of Payment
9.5.1.3, **9.7**, 9.10.2, 13.6, 14.1.1.3, 14.2.1.2
Faulty Work
(See Defective or Nonconforming Work)
Final Completion and Final Payment
4.2.1, 4.2.9, 9.8.2, **9.10**, 11.1.2, 11.1.3, 11.3.1, 11.3.5, 12.3, 14.2.4, 14.4.3
Financial Arrangements, Owner's
2.2.1, 13.2.2, 14.1.1.4
Fire and Extended Coverage Insurance
11.3.1.1
GENERAL PROVISIONS
1
Governing Law
13.1
Guarantees (See Warranty)
Hazardous Materials
10.2.4, **10.3**
Identification of Subcontractors and Suppliers
5.2.1
Indemnification
3.17, **3.18**, 9.10.2, 10.3.3, 10.3.5, 10.3.6, 11.3.1.2, 11.3.7
Information and Services Required of the Owner
2.1.2, **2.2**, 3.2.2, 3.12.4, 3.12.10, 6.1.3, 6.1.4, 6.2.5, 9.6.1, 9.6.4, 9.9.2, 9.10.3, 10.3.3, 11.2, 11.4, 13.5.1, 13.5.2, 14.1.1.4, 14.1.4, 15.1.3
Initial Decision
15.2
Initial Decision Maker, Definition of
1.1.8
Initial Decision Maker, Decisions
14.2.2, 14.2.4, 15.2.1, 15.2.2, 15.2.3, 15.2.4, 15.2.5
Initial Decision Maker, Extent of Authority
14.2.2, 14.2.4, 15.1.3, 15.2.1, 15.2.2, 15.2.3, 15.2.4, 15.2.5
Injury or Damage to Person or Property
10.2.8, 10.4
Inspections
3.1.3, 3.3.3, 3.7.1, 4.2.2, 4.2.6, 4.2.9, 9.4.2, 9.8.3, 9.9.2, 9.10.1, 12.2.1, 13.5
Instructions to Bidders
1.1.1
Instructions to the Contractor
3.2.4, 3.3.1, 3.8.1, 5.2.1, 7, 8.2.2, 12, 13.5.2
Instruments of Service, Definition of
1.1.7
Insurance
3.18.1, 6.1.1, 7.3.7, 9.3.2, 9.8.4, 9.9.1, 9.10.2, **11**
Insurance, Boiler and Machinery
11.3.2
Insurance, Contractor's Liability
11.1
Insurance, Effective Date of
8.2.2, 11.1.2
Insurance, Loss of Use
11.3.3
Insurance, Owner's Liability
11.2
Insurance, Property
10.2.5, **11.3**
Insurance, Stored Materials
9.3.2
INSURANCE AND BONDS
11
Insurance Companies, Consent to Partial Occupancy
9.9.1
Intent of the Contract Documents
1.2.1, 4.2.7, 4.2.12, 4.2.13, 7.4
Interest
13.6
Interpretation
1.2.3, **1.4**, 4.1.1, 5.1, 6.1.2, 15.1.1
Interpretations, Written
4.2.11, 4.2.12, 15.1.4
Judgment on Final Award
15.4.2
Labor and Materials, Equipment
1.1.3, 1.1.6, **3.4**, 3.5, 3.8.2, 3.8.3, 3.12, 3.13, 3.15.1, 4.2.6, 4.2.7, 5.2.1, 6.2.1, 7.3.7, 9.3.2, 9.3.3, 9.5.1.3, 9.10.2, 10.2.1, 10.2.4, 14.2.1.1, 14.2.1.2
Labor Disputes
8.3.1
Laws and Regulations
1.5, 3.2.3, 3.6, 3.7, 3.12.10, 3.13, 4.1.1, 9.6.4, 9.9.1, 10.2.2, 11.1.1, 11.3, 13.1, 13.4, 13.5.1, 13.5.2, 13.6, 14, 15.2.8, 15.4
Liens
2.1.2, 9.3.3, 9.10.2, 9.10.4, 15.2.8
Limitations, Statutes of
12.2.5, 13.7, 15.4.1.1
Limitations of Liability
2.3, 3.2.2, 3.5, 3.12.10, 3.17, 3.18.1, 4.2.6, 4.2.7, 4.2.12, 6.2.2, 9.4.2, 9.6.4, 9.6.7, 10.2.5, 10.3.3, 11.1.2, 11.2, 11.3.7, 12.2.5, 13.4.2
Limitations of Time
2.1.2, 2.2, 2.4, 3.2.2, 3.10, 3.11, 3.12.5, 3.15.1, 4.2.7, 5.2, 5.3, 5.4.1, 6.2.4, 7.3, 7.4, 8.2, 9.2, 9.3.1, 9.3.3, 9.4.1, 9.5, 9.6, 9.7, 9.8, 9.9, 9.10, 11.1.3, 11.3.1.5, 11.3.6, 11.3.10, 12.2, 13.5, 13.7, 14, 15
Loss of Use Insurance
11.3.3
Material Suppliers
1.5, 3.12.1, 4.2.4, 4.2.6, 5.2.1, 9.3, 9.4.2, 9.6, 9.10.5
Materials, Hazardous
10.2.4, **10.3**

Init.
/

AIA Document A201™ – 2007. Copyright © 1911, 1915, 1918, 1925, 1937, 1951, 1958, 1961, 1963, 1966, 1970, 1976, 1987, 1997 and 2007 by The American Institute of Architects. **All rights reserved. WARNING: This AIA® Document is protected by U.S. Copyright Law and International Treaties. Unauthorized reproduction or distribution of this AIA® Document, or any portion of it, may result in severe civil and criminal penalties, and will be prosecuted to the maximum extent possible under the law.** This document was produced by AIA software at 13:15:40 on 05/08/2014 under Order No.9101999414_1 which expires on 12/08/2014, and is not for resale.
User Notes:

(1919367023)

Materials, Labor, Equipment and
1.1.3, 1.1.6, 1.5.1, 3.4.1, 3.5, 3.8.2, 3.8.3, 3.12, 3.13, 3.15.1, 4.2.6, 4.2.7, 5.2.1, 6.2.1, 7.3.7, 9.3.2, 9.3.3, 9.5.1.3, 9.10.2, 10.2.1.2, 10.2.4, 14.2.1.1, 14.2.1.2
Means, Methods, Techniques, Sequences and Procedures of Construction
3.3.1, 3.12.10, 4.2.2, 4.2.7, 9.4.2
Mechanic's Lien
2.1.2, 15.2.8
Mediation
8.3.1, 10.3.5, 10.3.6, 15.2.1, 15.2.5, 15.2.6, **15.3**, 15.4.1
Minor Changes in the Work
1.1.1, 3.12.8, 4.2.8, 7.1, **7.4**
MISCELLANEOUS PROVISIONS
13
Modifications, Definition of
1.1.1
Modifications to the Contract
1.1.1, 1.1.2, 3.11, 4.1.2, 4.2.1, 5.2.3, 7, 8.3.1, 9.7, 10.3.2, 11.3.1
Mutual Responsibility
6.2
Nonconforming Work, Acceptance of
9.6.6, 9.9.3, **12.3**
Nonconforming Work, Rejection and Correction of
2.3, 2.4, 3.5, 4.2.6, 6.2.4, 9.5.1, 9.8.2, 9.9.3, 9.10.4, 12.2.1
Notice
2.2.1, 2.3, 2.4, 3.2.4, 3.3.1, 3.7.2, 3.12.9, 5.2.1, 9.7, 9.10, 10.2.2, 11.1.3, 12.2.2.1, 13.3, 13.5.1, 13.5.2, 14.1, 14.2, 15.2.8, 15.4.1
Notice, Written
2.3, 2.4, 3.3.1, 3.9.2, 3.12.9, 3.12.10, 5.2.1, 9.7, 9.10, 10.2.2, 10.3, 11.1.3, 11.3.6, 12.2.2.1, **13.3**, 14, 15.2.8, 15.4.1
Notice of Claims
3.7.4, 10.2.8, **15.1.2**, 15.4
Notice of Testing and Inspections
13.5.1, 13.5.2
Observations, Contractor's
3.2, 3.7.4
Occupancy
2.2.2, 9.6.6, 9.8, 11.3.1.5
Orders, Written
1.1.1, 2.3, 3.9.2, 7, 8.2.2, 11.3.9, 12.1, 12.2.2.1, 13.5.2, 14.3.1
OWNER
2
Owner, Definition of
2.1.1
Owner, Information and Services Required of the
2.1.2, **2.2**, 3.2.2, 3.12.10, 6.1.3, 6.1.4, 6.2.5, 9.3.2, 9.6.1, 9.6.4, 9.9.2, 9.10.3, 10.3.3, 11.2, 11.3, 13.5.1, 13.5.2, 14.1.1.4, 14.1.4, 15.1.3
Owner's Authority
1.5, 2.1.1, 2.3, 2.4, 3.4.2, 3.8.1, 3.12.10, 3.14.2, 4.1.2, 4.1.3, 4.2.4, 4.2.9, 5.2.1, 5.2.4, 5.4.1, 6.1, 6.3, 7.2.1, 7.3.1, 8.2.2, 8.3.1, 9.3.1, 9.3.2, 9.5.1, 9.6.4, 9.9.1, 9.10.2, 10.3.2, 11.1.3, 11.3.3, 11.3.10, 12.2.2, 12.3, 13.2.2, 14.3, 14.4, 15.2.7
Owner's Financial Capability
2.2.1, 13.2.2, 14.1.1.4
Owner's Liability Insurance
11.2
Owner's Relationship with Subcontractors
1.1.2, 5.2, 5.3, 5.4, 9.6.4, 9.10.2, 14.2.2
Owner's Right to Carry Out the Work
2.4, 14.2.2
Owner's Right to Clean Up
6.3
Owner's Right to Perform Construction and to Award Separate Contracts
6.1
Owner's Right to Stop the Work
2.3
Owner's Right to Suspend the Work
14.3
Owner's Right to Terminate the Contract
14.2
Ownership and Use of Drawings, Specifications and Other Instruments of Service
1.1.1, 1.1.6, 1.1.7, **1.5**, 2.2.5, 3.2.2, 3.11, 3.17, 4.2.12, 5.3
Partial Occupancy or Use
9.6.6, **9.9**, 11.3.1.5
Patching, Cutting and
3.14, 6.2.5
Patents
3.17
Payment, Applications for
4.2.5, 7.3.9, 9.2, **9.3**, 9.4, 9.5, 9.6.3, 9.7, 9.8.5, 9.10.1, 14.2.3, 14.2.4, 14.4.3
Payment, Certificates for
4.2.5, 4.2.9, 9.3.3, **9.4**, 9.5, 9.6.1, 9.6.6, 9.7, 9.10.1, 9.10.3, 13.7, 14.1.1.3, 14.2.4
Payment, Failure of
9.5.1.3, **9.7**, 9.10.2, 13.6, 14.1.1.3, 14.2.1.2
Payment, Final
4.2.1, 4.2.9, 9.8.2, 9.10, 11.1.2, 11.1.3, 11.4.1, 12.3, 13.7, 14.2.4, 14.4.3
Payment Bond, Performance Bond and
7.3.7.4, 9.6.7, 9.10.3, **11.4**
Payments, Progress
9.3, **9.6**, 9.8.5, 9.10.3, 13.6, 14.2.3, 15.1.3
PAYMENTS AND COMPLETION
9
Payments to Subcontractors
5.4.2, 9.5.1.3, 9.6.2, 9.6.3, 9.6.4, 9.6.7, 14.2.1.2
PCB
10.3.1

AIA Document A201™ – 2007. Copyright © 1911, 1915, 1918, 1925, 1937, 1951, 1958, 1961, 1963, 1966, 1970, 1976, 1987, 1997 and 2007 by The American Institute of Architects. **All rights reserved. WARNING: This AIA® Document is protected by U.S. Copyright Law and International Treaties. Unauthorized reproduction or distribution of this AIA® Document, or any portion of it, may result in severe civil and criminal penalties, and will be prosecuted to the maximum extent possible under the law.** This document was produced by AIA software at 13:15:40 on 05/08/2014 under Order No.9101999414_1 which expires on 12/08/2014, and is not for resale.
User Notes: (1919367023)

Performance Bond and Payment Bond
7.3.7.4, 9.6.7, 9.10.3, **11.4**
Permits, Fees, Notices and Compliance with Laws
2.2.2, **3.7**, 3.13, 7.3.7.4, 10.2.2
PERSONS AND PROPERTY, PROTECTION OF
10
Polychlorinated Biphenyl
10.3.1
Product Data, Definition of
3.12.2
Product Data and Samples, Shop Drawings
3.11, **3.12**, 4.2.7
Progress and Completion
4.2.2, **8.2**, 9.8, 9.9.1, 14.1.4, 15.1.3
Progress Payments
9.3, **9.6**, 9.8.5, 9.10.3, 13.6, 14.2.3, 15.1.3
Project, Definition of
1.1.4
Project Representatives
4.2.10
Property Insurance
10.2.5, **11.3**
PROTECTION OF PERSONS AND PROPERTY
10
Regulations and Laws
1.5, 3.2.3, 3.6, 3.7, 3.12.10, 3.13, 4.1.1, 9.6.4, 9.9.1, 10.2.2, 11.1, 11.4, 13.1, 13.4, 13.5.1, 13.5.2, 13.6, 14, 15.2.8, 15.4
Rejection of Work
3.5, 4.2.6, 12.2.1
Releases and Waivers of Liens
9.10.2
Representations
3.2.1, 3.5, 3.12.6, 6.2.2, 8.2.1, 9.3.3, 9.4.2, 9.5.1, 9.8.2, 9.10.1
Representatives
2.1.1, 3.1.1, 3.9, 4.1.1, 4.2.1, 4.2.2, 4.2.10, 5.1.1, 5.1.2, 13.2.1
Responsibility for Those Performing the Work
3.3.2, 3.18, 4.2.3, 5.3, 6.1.3, 6.2, 6.3, 9.5.1, 10
Retainage
9.3.1, 9.6.2, 9.8.5, 9.9.1, 9.10.2, 9.10.3
Review of Contract Documents and Field Conditions by Contractor
3.2, 3.12.7, 6.1.3
Review of Contractor's Submittals by Owner and Architect
3.10.1, 3.10.2, 3.11, 3.12, 4.2, 5.2, 6.1.3, 9.2, 9.8.2
Review of Shop Drawings, Product Data and Samples by Contractor
3.12
Rights and Remedies
1.1.2, 2.3, 2.4, 3.5, 3.7.4, 3.15.2, 4.2.6, 5.3, 5.4, 6.1, 6.3, 7.3.1, 8.3, 9.5.1, 9.7, 10.2.5, 10.3, 12.2.2, 12.2.4, **13.4**, 14, 15.4
Royalties, Patents and Copyrights
3.17
Rules and Notices for Arbitration
15.4.1
Safety of Persons and Property
10.2, 10.4
Safety Precautions and Programs
3.3.1, 4.2.2, 4.2.7, 5.3, **10.1**, 10.2, 10.4
Samples, Definition of
3.12.3
Samples, Shop Drawings, Product Data and
3.11, **3.12**, 4.2.7
Samples at the Site, Documents and
3.11
Schedule of Values
9.2, 9.3.1
Schedules, Construction
3.10, 3.12.1, 3.12.2, 6.1.3, 15.1.5.2
Separate Contracts and Contractors
1.1.4, 3.12.5, 3.14.2, 4.2.4, 4.2.7, 6, 8.3.1, 12.1.2
Shop Drawings, Definition of
3.12.1
Shop Drawings, Product Data and Samples
3.11, **3.12**, 4.2.7
Site, Use of
3.13, 6.1.1, 6.2.1
Site Inspections
3.2.2, 3.3.3, 3.7.1, 3.7.4, 4.2, 9.4.2, 9.10.1, 13.5
Site Visits, Architect's
3.7.4, 4.2.2, 4.2.9, 9.4.2, 9.5.1, 9.9.2, 9.10.1, 13.5
Special Inspections and Testing
4.2.6, 12.2.1, 13.5
Specifications, Definition of
1.1.6
Specifications
1.1.1, **1.1.6**, 1.2.2, 1.5, 3.11, 3.12.10, 3.17, 4.2.14
Statute of Limitations
13.7, 15.4.1.1
Stopping the Work
2.3, 9.7, 10.3, 14.1
Stored Materials
6.2.1, 9.3.2, 10.2.1.2, 10.2.4
Subcontractor, Definition of
5.1.1
SUBCONTRACTORS
5
Subcontractors, Work by
1.2.2, 3.3.2, 3.12.1, 4.2.3, 5.2.3, 5.3, 5.4, 9.3.1.2, 9.6.7
Subcontractual Relations
5.3, 5.4, 9.3.1.2, 9.6, 9.10, 10.2.1, 14.1, 14.2.1
Submittals
3.10, 3.11, 3.12, 4.2.7, 5.2.1, 5.2.3, 7.3.7, 9.2, 9.3, 9.8, 9.9.1, 9.10.2, 9.10.3, 11.1.3
Submittal Schedule
3.10.2, 3.12.5, 4.2.7
Subrogation, Waivers of
6.1.1, **11.3.7**

AIA Document A201™ – 2007. Copyright © 1911, 1915, 1918, 1925, 1937, 1951, 1958, 1961, 1963, 1966, 1970, 1976, 1987, 1997 and 2007 by The American Institute of Architects. **All rights reserved. WARNING: This AIA® Document is protected by U.S. Copyright Law and International Treaties. Unauthorized reproduction or distribution of this AIA® Document, or any portion of it, may result in severe civil and criminal penalties, and will be prosecuted to the maximum extent possible under the law.** This document was produced by AIA software at 13:15:40 on 05/08/2014 under Order No.9101999414_1 which expires on 12/08/2014, and is not for resale.
User Notes:

(1919367023)

Substantial Completion
4.2.9, 8.1.1, 8.1.3, 8.2.3, 9.4.2, **9.8**, 9.9.1, 9.10.3, 12.2, 13.7
Substantial Completion, Definition of
9.8.1
Substitution of Subcontractors
5.2.3, 5.2.4
Substitution of Architect
4.1.3
Substitutions of Materials
3.4.2, 3.5, 7.3.8
Sub-subcontractor, Definition of
5.1.2
Subsurface Conditions
3.7.4
Successors and Assigns
13.2
Superintendent
3.9, 10.2.6
Supervision and Construction Procedures
1.2.2, **3.3**, 3.4, 3.12.10, 4.2.2, 4.2.7, 6.1.3, 6.2.4, 7.1.3, 7.3.7, 8.2, 8.3.1, 9.4.2, 10, 12, 14, 15.1.3
Surety
5.4.1.2, 9.8.5, 9.10.2, 9.10.3, 14.2.2, 15.2.7
Surety, Consent of
9.10.2, 9.10.3
Surveys
2.2.3
Suspension by the Owner for Convenience
14.3
Suspension of the Work
5.4.2, 14.3
Suspension or Termination of the Contract
5.4.1.1, 14
Taxes
3.6, 3.8.2.1, 7.3.7.4
Termination by the Contractor
14.1, 15.1.6
Termination by the Owner for Cause
5.4.1.1, **14.2**, 15.1.6
Termination by the Owner for Convenience
14.4
Termination of the Architect
4.1.3
Termination of the Contractor
14.2.2
TERMINATION OR SUSPENSION OF THE CONTRACT
14
Tests and Inspections
3.1.3, 3.3.3, 4.2.2, 4.2.6, 4.2.9, 9.4.2, 9.8.3, 9.9.2, 9.10.1, 10.3.2, 11.4.1, 12.2.1, **13.5**
TIME
8
Time, Delays and Extensions of
3.2.4, 3.7.4, 5.2.3, 7.2.1, 7.3.1, 7.4, **8.3**, 9.5.1, 9.7, 10.3.2, 10.4, 14.3.2, 15.1.5, 15.2.5
Time Limits
2.1.2, 2.2, 2.4, 3.2.2, 3.10, 3.11, 3.12.5, 3.15.1, 4.2, 5.2, 5.3, 5.4, 6.2.4, 7.3, 7.4, 8.2, 9.2, 9.3.1, 9.3.3, 9.4.1, 9.5, 9.6, 9.7, 9.8, 9.9, 9.10, 11.1.3, 12.2, 13.5, 13.7, 14, 15.1.2, 15.4
Time Limits on Claims
3.7.4, 10.2.8, **13.7**, 15.1.2
Title to Work
9.3.2, 9.3.3
Transmission of Data in Digital Form
1.6
UNCOVERING AND CORRECTION OF WORK
12
Uncovering of Work
12.1
Unforeseen Conditions, Concealed or Unknown
3.7.4, 8.3.1, 10.3
Unit Prices
7.3.3.2, 7.3.4
Use of Documents
1.1.1, 1.5, 2.2.5, 3.12.6, 5.3
Use of Site
3.13, 6.1.1, 6.2.1
Values, Schedule of
9.2, 9.3.1
Waiver of Claims by the Architect
13.4.2
Waiver of Claims by the Contractor
9.10.5, 13.4.2, 15.1.6
Waiver of Claims by the Owner
9.9.3, 9.10.3, 9.10.4, 12.2.2.1, 13.4.2, 14.2.4, 15.1.6
Waiver of Consequential Damages
14.2.4, 15.1.6
Waiver of Liens
9.10.2, 9.10.4
Waivers of Subrogation
6.1.1, **11.3.7**
Warranty
3.5, 4.2.9, 9.3.3, 9.8.4, 9.9.1, 9.10.4, 12.2.2, 13.7
Weather Delays
15.1.5.2
Work, Definition of
1.1.3
Written Consent
1.5.2, 3.4.2, 3.7.4, 3.12.8, 3.14.2, 4.1.2, 9.3.2, 9.8.5, 9.9.1, 9.10.2, 9.10.3, 11.4.1, 13.2, 13.4.2, 15.4.4.2
Written Interpretations
4.2.11, 4.2.12
Written Notice
2.3, 2.4, 3.3.1, 3.9, 3.12.9, 3.12.10, 5.2.1, 8.2.2, 9.7, 9.10, 10.2.2, 10.3, 11.1.3, 12.2.2, 12.2.4, **13.3**, 14, 15.4.1
Written Orders
1.1.1, 2.3, 3.9, 7, 8.2.2, 12.1, 12.2, 13.5.2, 14.3.1, 15.1.2

AIA Document A201™ – 2007. Copyright © 1911, 1915, 1918, 1925, 1937, 1951, 1958, 1961, 1963, 1966, 1970, 1976, 1987, 1997 and 2007 by The American Institute of Architects. **All rights reserved. WARNING: This AIA® Document is protected by U.S. Copyright Law and International Treaties. Unauthorized reproduction or distribution of this AIA® Document, or any portion of it, may result in severe civil and criminal penalties, and will be prosecuted to the maximum extent possible under the law.** This document was produced by AIA software at 13:15:40 on 05/08/2014 under Order No.9101999414_1 which expires on 12/08/2014, and is not for resale.
User Notes:

(1919367023)

ARTICLE 1 GENERAL PROVISIONS

§ 1.1 BASIC DEFINITIONS

§ 1.1.1 THE CONTRACT DOCUMENTS

The Contract Documents are enumerated in the Agreement between the Owner and Contractor (hereinafter the Agreement) and consist of the Agreement, Conditions of the Contract (General, Supplementary and other Conditions), Drawings, Specifications, Addenda issued prior to execution of the Contract, other documents listed in the Agreement and Modifications issued after execution of the Contract. A Modification is (1) a written amendment to the Contract signed by both parties, (2) a Change Order, (3) a Construction Change Directive or (4) a written order for a minor change in the Work issued by the Architect. Unless specifically enumerated in the Agreement, the Contract Documents do not include the advertisement or invitation to bid, Instructions to Bidders, sample forms, other information furnished by the Owner in anticipation of receiving bids or proposals, the Contractor's bid or proposal, or portions of Addenda relating to bidding requirements.

§ 1.1.2 THE CONTRACT

The Contract Documents form the Contract for Construction. The Contract represents the entire and integrated agreement between the parties hereto and supersedes prior negotiations, representations or agreements, either written or oral. The Contract may be amended or modified only by a Modification. The Contract Documents shall not be construed to create a contractual relationship of any kind (1) between the Contractor and the Architect or the Architect's consultants, (2) between the Owner and a Subcontractor or a Sub-subcontractor, (3) between the Owner and the Architect or the Architect's consultants or (4) between any persons or entities other than the Owner and the Contractor. The Architect shall, however, be entitled to performance and enforcement of obligations under the Contract intended to facilitate performance of the Architect's duties.

§ 1.1.3 THE WORK

The term "Work" means the construction and services required by the Contract Documents, whether completed or partially completed, and includes all other labor, materials, equipment and services provided or to be provided by the Contractor to fulfill the Contractor's obligations. The Work may constitute the whole or a part of the Project.

§ 1.1.4 THE PROJECT

The Project is the total construction of which the Work performed under the Contract Documents may be the whole or a part and which may include construction by the Owner and by separate contractors.

§ 1.1.5 THE DRAWINGS

The Drawings are the graphic and pictorial portions of the Contract Documents showing the design, location and dimensions of the Work, generally including plans, elevations, sections, details, schedules and diagrams.

§ 1.1.6 THE SPECIFICATIONS

The Specifications are that portion of the Contract Documents consisting of the written requirements for materials, equipment, systems, standards and workmanship for the Work, and performance of related services.

§ 1.1.7 INSTRUMENTS OF SERVICE

Instruments of Service are representations, in any medium of expression now known or later developed, of the tangible and intangible creative work performed by the Architect and the Architect's consultants under their respective professional services agreements. Instruments of Service may include, without limitation, studies, surveys, models, sketches, drawings, specifications, and other similar materials.

§ 1.1.8 INITIAL DECISION MAKER

The Initial Decision Maker is the person identified in the Agreement to render initial decisions on Claims in accordance with Section 15.2 and certify termination of the Agreement under Section 14.2.2.

§ 1.2 CORRELATION AND INTENT OF THE CONTRACT DOCUMENTS

§ 1.2.1 The intent of the Contract Documents is to include all items necessary for the proper execution and completion of the Work by the Contractor. The Contract Documents are complementary, and what is required by one shall be as binding as if required by all; performance by the Contractor shall be required only to the extent consistent with the Contract Documents and reasonably inferable from them as being necessary to produce the indicated results.

AIA Document A201™ – 2007. Copyright © 1911, 1915, 1918, 1925, 1937, 1951, 1958, 1961, 1963, 1966, 1970, 1976, 1987, 1997 and 2007 by The American Institute of Architects. **All rights reserved. WARNING: This AIA® Document is protected by U.S. Copyright Law and International Treaties. Unauthorized reproduction or distribution of this AIA® Document, or any portion of it, may result in severe civil and criminal penalties, and will be prosecuted to the maximum extent possible under the law.** This document was produced by AIA software at 13:15:40 on 05/08/2014 under Order No.9101999414_1 which expires on 12/08/2014, and is not for resale.
User Notes: (1919367023)

§ 1.2.2 Organization of the Specifications into divisions, sections and articles, and arrangement of Drawings shall not control the Contractor in dividing the Work among Subcontractors or in establishing the extent of Work to be performed by any trade.

§ 1.2.3 Unless otherwise stated in the Contract Documents, words that have well-known technical or construction industry meanings are used in the Contract Documents in accordance with such recognized meanings.

§ 1.3 CAPITALIZATION

Terms capitalized in these General Conditions include those that are (1) specifically defined, (2) the titles of numbered articles or (3) the titles of other documents published by the American Institute of Architects.

§ 1.4 INTERPRETATION

In the interest of brevity the Contract Documents frequently omit modifying words such as "all" and "any" and articles such as "the" and "an," but the fact that a modifier or an article is absent from one statement and appears in another is not intended to affect the interpretation of either statement.

§ 1.5 OWNERSHIP AND USE OF DRAWINGS, SPECIFICATIONS AND OTHER INSTRUMENTS OF SERVICE

§ 1.5.1 The Architect and the Architect's consultants shall be deemed the authors and owners of their respective Instruments of Service, including the Drawings and Specifications, and will retain all common law, statutory and other reserved rights, including copyrights. The Contractor, Subcontractors, Sub-subcontractors, and material or equipment suppliers shall not own or claim a copyright in the Instruments of Service. Submittal or distribution to meet official regulatory requirements or for other purposes in connection with this Project is not to be construed as publication in derogation of the Architect's or Architect's consultants' reserved rights.

§ 1.5.2 The Contractor, Subcontractors, Sub-subcontractors and material or equipment suppliers are authorized to use and reproduce the Instruments of Service provided to them solely and exclusively for execution of the Work. All copies made under this authorization shall bear the copyright notice, if any, shown on the Instruments of Service. The Contractor, Subcontractors, Sub-subcontractors, and material or equipment suppliers may not use the Instruments of Service on other projects or for additions to this Project outside the scope of the Work without the specific written consent of the Owner, Architect and the Architect's consultants.

§ 1.6 TRANSMISSION OF DATA IN DIGITAL FORM

If the parties intend to transmit Instruments of Service or any other information or documentation in digital form, they shall endeavor to establish necessary protocols governing such transmissions, unless otherwise already provided in the Agreement or the Contract Documents.

ARTICLE 2 OWNER

§ 2.1 GENERAL

§ 2.1.1 The Owner is the person or entity identified as such in the Agreement and is referred to throughout the Contract Documents as if singular in number. The Owner shall designate in writing a representative who shall have express authority to bind the Owner with respect to all matters requiring the Owner's approval or authorization. Except as otherwise provided in Section 4.2.1, the Architect does not have such authority. The term "Owner" means the Owner or the Owner's authorized representative.

§ 2.1.2 The Owner shall furnish to the Contractor within fifteen days after receipt of a written request, information necessary and relevant for the Contractor to evaluate, give notice of or enforce mechanic's lien rights. Such information shall include a correct statement of the record legal title to the property on which the Project is located, usually referred to as the site, and the Owner's interest therein.

§ 2.2 INFORMATION AND SERVICES REQUIRED OF THE OWNER

§ 2.2.1 Prior to commencement of the Work, the Contractor may request in writing that the Owner provide reasonable evidence that the Owner has made financial arrangements to fulfill the Owner's obligations under the Contract. Thereafter, the Contractor may only request such evidence if (1) the Owner fails to make payments to the Contractor as the Contract Documents require; (2) a change in the Work materially changes the Contract Sum; or (3) the Contractor identifies in writing a reasonable concern regarding the Owner's ability to make payment when due. The Owner shall furnish such evidence as a condition precedent to commencement or continuation of the Work or the

AIA Document A201™ – 2007. Copyright © 1911, 1915, 1918, 1925, 1937, 1951, 1958, 1961, 1963, 1966, 1970, 1976, 1987, 1997 and 2007 by The American Institute of Architects. All rights reserved. WARNING: This AIA® Document is protected by U.S. Copyright Law and International Treaties. Unauthorized reproduction or distribution of this AIA® Document, or any portion of it, may result in severe civil and criminal penalties, and will be prosecuted to the maximum extent possible under the law. This document was produced by AIA software at 13:15:40 on 05/08/2014 under Order No.9101999414_1 which expires on 12/08/2014, and is not for resale.
User Notes:

(1919367023)

portion of the Work affected by a material change. After the Owner furnishes the evidence, the Owner shall not materially vary such financial arrangements without prior notice to the Contractor.

§ 2.2.2 Except for permits and fees that are the responsibility of the Contractor under the Contract Documents, including those required under Section 3.7.1, the Owner shall secure and pay for necessary approvals, easements, assessments and charges required for construction, use or occupancy of permanent structures or for permanent changes in existing facilities.

§ 2.2.3 The Owner shall furnish surveys describing physical characteristics, legal limitations and utility locations for the site of the Project, and a legal description of the site. The Contractor shall be entitled to rely on the accuracy of information furnished by the Owner but shall exercise proper precautions relating to the safe performance of the Work.

§ 2.2.4 The Owner shall furnish information or services required of the Owner by the Contract Documents with reasonable promptness. The Owner shall also furnish any other information or services under the Owner's control and relevant to the Contractor's performance of the Work with reasonable promptness after receiving the Contractor's written request for such information or services.

§ 2.2.5 Unless otherwise provided in the Contract Documents, the Owner shall furnish to the Contractor one copy of the Contract Documents for purposes of making reproductions pursuant to Section 1.5.2.

§ 2.3 OWNER'S RIGHT TO STOP THE WORK

If the Contractor fails to correct Work that is not in accordance with the requirements of the Contract Documents as required by Section 12.2 or repeatedly fails to carry out Work in accordance with the Contract Documents, the Owner may issue a written order to the Contractor to stop the Work, or any portion thereof, until the cause for such order has been eliminated; however, the right of the Owner to stop the Work shall not give rise to a duty on the part of the Owner to exercise this right for the benefit of the Contractor or any other person or entity, except to the extent required by Section 6.1.3.

§ 2.4 OWNER'S RIGHT TO CARRY OUT THE WORK

If the Contractor defaults or neglects to carry out the Work in accordance with the Contract Documents and fails within a ten-day period after receipt of written notice from the Owner to commence and continue correction of such default or neglect with diligence and promptness, the Owner may, without prejudice to other remedies the Owner may have, correct such deficiencies. In such case an appropriate Change Order shall be issued deducting from payments then or thereafter due the Contractor the reasonable cost of correcting such deficiencies, including Owner's expenses and compensation for the Architect's additional services made necessary by such default, neglect or failure. Such action by the Owner and amounts charged to the Contractor are both subject to prior approval of the Architect. If payments then or thereafter due the Contractor are not sufficient to cover such amounts, the Contractor shall pay the difference to the Owner.

ARTICLE 3 CONTRACTOR

§ 3.1 GENERAL

§ 3.1.1 The Contractor is the person or entity identified as such in the Agreement and is referred to throughout the Contract Documents as if singular in number. The Contractor shall be lawfully licensed, if required in the jurisdiction where the Project is located. The Contractor shall designate in writing a representative who shall have express authority to bind the Contractor with respect to all matters under this Contract. The term "Contractor" means the Contractor or the Contractor's authorized representative.

§ 3.1.2 The Contractor shall perform the Work in accordance with the Contract Documents.

§ 3.1.3 The Contractor shall not be relieved of obligations to perform the Work in accordance with the Contract Documents either by activities or duties of the Architect in the Architect's administration of the Contract, or by tests, inspections or approvals required or performed by persons or entities other than the Contractor.

AIA Document A201™ – 2007. Copyright © 1911, 1915, 1918, 1925, 1937, 1951, 1958, 1961, 1963, 1966, 1970, 1976, 1987, 1997 and 2007 by The American Institute of Architects. All rights reserved. WARNING: This AIA® Document is protected by U.S. Copyright Law and International Treaties. Unauthorized reproduction or distribution of this AIA® Document, or any portion of it, may result in severe civil and criminal penalties, and will be prosecuted to the maximum extent possible under the law. This document was produced by AIA software at 13:15:40 on 05/08/2014 under Order No.9101999414_1 which expires on 12/08/2014, and is not for resale.
User Notes:

(1919367023)

§ 3.2 REVIEW OF CONTRACT DOCUMENTS AND FIELD CONDITIONS BY CONTRACTOR

§ 3.2.1 Execution of the Contract by the Contractor is a representation that the Contractor has visited the site, become generally familiar with local conditions under which the Work is to be performed and correlated personal observations with requirements of the Contract Documents.

§ 3.2.2 Because the Contract Documents are complementary, the Contractor shall, before starting each portion of the Work, carefully study and compare the various Contract Documents relative to that portion of the Work, as well as the information furnished by the Owner pursuant to Section 2.2.3, shall take field measurements of any existing conditions related to that portion of the Work, and shall observe any conditions at the site affecting it. These obligations are for the purpose of facilitating coordination and construction by the Contractor and are not for the purpose of discovering errors, omissions, or inconsistencies in the Contract Documents; however, the Contractor shall promptly report to the Architect any errors, inconsistencies or omissions discovered by or made known to the Contractor as a request for information in such form as the Architect may require. It is recognized that the Contractor's review is made in the Contractor's capacity as a contractor and not as a licensed design professional, unless otherwise specifically provided in the Contract Documents.

§ 3.2.3 The Contractor is not required to ascertain that the Contract Documents are in accordance with applicable laws, statutes, ordinances, codes, rules and regulations, or lawful orders of public authorities, but the Contractor shall promptly report to the Architect any nonconformity discovered by or made known to the Contractor as a request for information in such form as the Architect may require.

§ 3.2.4 If the Contractor believes that additional cost or time is involved because of clarifications or instructions the Architect issues in response to the Contractor's notices or requests for information pursuant to Sections 3.2.2 or 3.2.3, the Contractor shall make Claims as provided in Article 15. If the Contractor fails to perform the obligations of Sections 3.2.2 or 3.2.3, the Contractor shall pay such costs and damages to the Owner as would have been avoided if the Contractor had performed such obligations. If the Contractor performs those obligations, the Contractor shall not be liable to the Owner or Architect for damages resulting from errors, inconsistencies or omissions in the Contract Documents, for differences between field measurements or conditions and the Contract Documents, or for nonconformities of the Contract Documents to applicable laws, statutes, ordinances, codes, rules and regulations, and lawful orders of public authorities.

§ 3.3 SUPERVISION AND CONSTRUCTION PROCEDURES

§ 3.3.1 The Contractor shall supervise and direct the Work, using the Contractor's best skill and attention. The Contractor shall be solely responsible for, and have control over, construction means, methods, techniques, sequences and procedures and for coordinating all portions of the Work under the Contract, unless the Contract Documents give other specific instructions concerning these matters. If the Contract Documents give specific instructions concerning construction means, methods, techniques, sequences or procedures, the Contractor shall evaluate the jobsite safety thereof and, except as stated below, shall be fully and solely responsible for the jobsite safety of such means, methods, techniques, sequences or procedures. If the Contractor determines that such means, methods, techniques, sequences or procedures may not be safe, the Contractor shall give timely written notice to the Owner and Architect and shall not proceed with that portion of the Work without further written instructions from the Architect. If the Contractor is then instructed to proceed with the required means, methods, techniques, sequences or procedures without acceptance of changes proposed by the Contractor, the Owner shall be solely responsible for any loss or damage arising solely from those Owner-required means, methods, techniques, sequences or procedures.

§ 3.3.2 The Contractor shall be responsible to the Owner for acts and omissions of the Contractor's employees, Subcontractors and their agents and employees, and other persons or entities performing portions of the Work for, or on behalf of, the Contractor or any of its Subcontractors.

§ 3.3.3 The Contractor shall be responsible for inspection of portions of Work already performed to determine that such portions are in proper condition to receive subsequent Work.

§ 3.4 LABOR AND MATERIALS

§ 3.4.1 Unless otherwise provided in the Contract Documents, the Contractor shall provide and pay for labor, materials, equipment, tools, construction equipment and machinery, water, heat, utilities, transportation, and other facilities and services necessary for proper execution and completion of the Work, whether temporary or permanent and whether or not incorporated or to be incorporated in the Work.

Init.
/

AIA Document A201™ – 2007. Copyright © 1911, 1915, 1918, 1925, 1937, 1951, 1958, 1961, 1963, 1966, 1970, 1976, 1987, 1997 and 2007 by The American Institute of Architects. **All rights reserved. WARNING: This AIA® Document is protected by U.S. Copyright Law and International Treaties. Unauthorized reproduction or distribution of this AIA® Document, or any portion of it, may result in severe civil and criminal penalties, and will be prosecuted to the maximum extent possible under the law.** This document was produced by AIA software at 13:15:40 on 05/08/2014 under Order No.9101999414_1 which expires on 12/08/2014, and is not for resale.
User Notes:

(1919367023)

§ 3.4.2 Except in the case of minor changes in the Work authorized by the Architect in accordance with Sections 3.12.8 or 7.4, the Contractor may make substitutions only with the consent of the Owner, after evaluation by the Architect and in accordance with a Change Order or Construction Change Directive.

§ 3.4.3 The Contractor shall enforce strict discipline and good order among the Contractor's employees and other persons carrying out the Work. The Contractor shall not permit employment of unfit persons or persons not properly skilled in tasks assigned to them.

§ 3.5 WARRANTY

The Contractor warrants to the Owner and Architect that materials and equipment furnished under the Contract will be of good quality and new unless the Contract Documents require or permit otherwise. The Contractor further warrants that the Work will conform to the requirements of the Contract Documents and will be free from defects, except for those inherent in the quality of the Work the Contract Documents require or permit. Work, materials, or equipment not conforming to these requirements may be considered defective. The Contractor's warranty excludes remedy for damage or defect caused by abuse, alterations to the Work not executed by the Contractor, improper or insufficient maintenance, improper operation, or normal wear and tear and normal usage. If required by the Architect, the Contractor shall furnish satisfactory evidence as to the kind and quality of materials and equipment.

§ 3.6 TAXES

The Contractor shall pay sales, consumer, use and similar taxes for the Work provided by the Contractor that are legally enacted when bids are received or negotiations concluded, whether or not yet effective or merely scheduled to go into effect.

§ 3.7 PERMITS, FEES, NOTICES AND COMPLIANCE WITH LAWS

§ 3.7.1 Unless otherwise provided in the Contract Documents, the Contractor shall secure and pay for the building permit as well as for other permits, fees, licenses, and inspections by government agencies necessary for proper execution and completion of the Work that are customarily secured after execution of the Contract and legally required at the time bids are received or negotiations concluded.

§ 3.7.2 The Contractor shall comply with and give notices required by applicable laws, statutes, ordinances, codes, rules and regulations, and lawful orders of public authorities applicable to performance of the Work.

§ 3.7.3 If the Contractor performs Work knowing it to be contrary to applicable laws, statutes, ordinances, codes, rules and regulations, or lawful orders of public authorities, the Contractor shall assume appropriate responsibility for such Work and shall bear the costs attributable to correction.

§ 3.7.4 **Concealed or Unknown Conditions.** If the Contractor encounters conditions at the site that are (1) subsurface or otherwise concealed physical conditions that differ materially from those indicated in the Contract Documents or (2) unknown physical conditions of an unusual nature, that differ materially from those ordinarily found to exist and generally recognized as inherent in construction activities of the character provided for in the Contract Documents, the Contractor shall promptly provide notice to the Owner and the Architect before conditions are disturbed and in no event later than 21 days after first observance of the conditions. The Architect will promptly investigate such conditions and, if the Architect determines that they differ materially and cause an increase or decrease in the Contractor's cost of, or time required for, performance of any part of the Work, will recommend an equitable adjustment in the Contract Sum or Contract Time, or both. If the Architect determines that the conditions at the site are not materially different from those indicated in the Contract Documents and that no change in the terms of the Contract is justified, the Architect shall promptly notify the Owner and Contractor in writing, stating the reasons. If either party disputes the Architect's determination or recommendation, that party may proceed as provided in Article 15.

§ 3.7.5 If, in the course of the Work, the Contractor encounters human remains or recognizes the existence of burial markers, archaeological sites or wetlands not indicated in the Contract Documents, the Contractor shall immediately suspend any operations that would affect them and shall notify the Owner and Architect. Upon receipt of such notice, the Owner shall promptly take any action necessary to obtain governmental authorization required to resume the operations. The Contractor shall continue to suspend such operations until otherwise instructed by the Owner but shall continue with all other operations that do not affect those remains or features. Requests for adjustments in the Contract Sum and Contract Time arising from the existence of such remains or features may be made as provided in Article 15.

AIA Document A201™ – 2007. Copyright © 1911, 1915, 1918, 1925, 1937, 1951, 1958, 1961, 1963, 1966, 1970, 1976, 1987, 1997 and 2007 by The American Institute of Architects. All rights reserved. WARNING: This AIA® Document is protected by U.S. Copyright Law and International Treaties. Unauthorized reproduction or distribution of this AIA® Document, or any portion of it, may result in severe civil and criminal penalties, and will be prosecuted to the maximum extent possible under the law. This document was produced by AIA software at 13:15:40 on 05/08/2014 under Order No.9101999414_1 which expires on 12/08/2014, and is not for resale.
User Notes:

(1919367023)

§ 3.8 ALLOWANCES

§ 3.8.1 The Contractor shall include in the Contract Sum all allowances stated in the Contract Documents. Items covered by allowances shall be supplied for such amounts and by such persons or entities as the Owner may direct, but the Contractor shall not be required to employ persons or entities to whom the Contractor has reasonable objection.

§ 3.8.2 Unless otherwise provided in the Contract Documents,

- **.1** Allowances shall cover the cost to the Contractor of materials and equipment delivered at the site and all required taxes, less applicable trade discounts;
- **.2** Contractor's costs for unloading and handling at the site, labor, installation costs, overhead, profit and other expenses contemplated for stated allowance amounts shall be included in the Contract Sum but not in the allowances; and
- **.3** Whenever costs are more than or less than allowances, the Contract Sum shall be adjusted accordingly by Change Order. The amount of the Change Order shall reflect (1) the difference between actual costs and the allowances under Section 3.8.2.1 and (2) changes in Contractor's costs under Section 3.8.2.2.

§ 3.8.3 Materials and equipment under an allowance shall be selected by the Owner with reasonable promptness.

§ 3.9 SUPERINTENDENT

§ 3.9.1 The Contractor shall employ a competent superintendent and necessary assistants who shall be in attendance at the Project site during performance of the Work. The superintendent shall represent the Contractor, and communications given to the superintendent shall be as binding as if given to the Contractor.

§ 3.9.2 The Contractor, as soon as practicable after award of the Contract, shall furnish in writing to the Owner through the Architect the name and qualifications of a proposed superintendent. The Architect may reply within 14 days to the Contractor in writing stating (1) whether the Owner or the Architect has reasonable objection to the proposed superintendent or (2) that the Architect requires additional time to review. Failure of the Architect to reply within the 14 day period shall constitute notice of no reasonable objection.

§ 3.9.3 The Contractor shall not employ a proposed superintendent to whom the Owner or Architect has made reasonable and timely objection. The Contractor shall not change the superintendent without the Owner's consent, which shall not unreasonably be withheld or delayed.

§ 3.10 CONTRACTOR'S CONSTRUCTION SCHEDULES

§ 3.10.1 The Contractor, promptly after being awarded the Contract, shall prepare and submit for the Owner's and Architect's information a Contractor's construction schedule for the Work. The schedule shall not exceed time limits current under the Contract Documents, shall be revised at appropriate intervals as required by the conditions of the Work and Project, shall be related to the entire Project to the extent required by the Contract Documents, and shall provide for expeditious and practicable execution of the Work.

§ 3.10.2 The Contractor shall prepare a submittal schedule, promptly after being awarded the Contract and thereafter as necessary to maintain a current submittal schedule, and shall submit the schedule(s) for the Architect's approval. The Architect's approval shall not unreasonably be delayed or withheld. The submittal schedule shall (1) be coordinated with the Contractor's construction schedule, and (2) allow the Architect reasonable time to review submittals. If the Contractor fails to submit a submittal schedule, the Contractor shall not be entitled to any increase in Contract Sum or extension of Contract Time based on the time required for review of submittals.

§ 3.10.3 The Contractor shall perform the Work in general accordance with the most recent schedules submitted to the Owner and Architect.

§ 3.11 DOCUMENTS AND SAMPLES AT THE SITE

The Contractor shall maintain at the site for the Owner one copy of the Drawings, Specifications, Addenda, Change Orders and other Modifications, in good order and marked currently to indicate field changes and selections made during construction, and one copy of approved Shop Drawings, Product Data, Samples and similar required submittals. These shall be available to the Architect and shall be delivered to the Architect for submittal to the Owner upon completion of the Work as a record of the Work as constructed.

Init.
/
AIA Document A201™ – 2007. Copyright © 1911, 1915, 1918, 1925, 1937, 1951, 1958, 1961, 1963, 1966, 1970, 1976, 1987, 1997 and 2007 by The American Institute of Architects. **All rights reserved. WARNING: This AIA® Document is protected by U.S. Copyright Law and International Treaties. Unauthorized reproduction or distribution of this AIA® Document, or any portion of it, may result in severe civil and criminal penalties, and will be prosecuted to the maximum extent possible under the law.** This document was produced by AIA software at 13:15:40 on 05/08/2014 under Order No.9101999414_1 which expires on 12/08/2014, and is not for resale.
User Notes:
(1919367023)

§ 3.12 SHOP DRAWINGS, PRODUCT DATA AND SAMPLES

§ 3.12.1 Shop Drawings are drawings, diagrams, schedules and other data specially prepared for the Work by the Contractor or a Subcontractor, Sub-subcontractor, manufacturer, supplier or distributor to illustrate some portion of the Work.

§ 3.12.2 Product Data are illustrations, standard schedules, performance charts, instructions, brochures, diagrams and other information furnished by the Contractor to illustrate materials or equipment for some portion of the Work.

§ 3.12.3 Samples are physical examples that illustrate materials, equipment or workmanship and establish standards by which the Work will be judged.

§ 3.12.4 Shop Drawings, Product Data, Samples and similar submittals are not Contract Documents. Their purpose is to demonstrate the way by which the Contractor proposes to conform to the information given and the design concept expressed in the Contract Documents for those portions of the Work for which the Contract Documents require submittals. Review by the Architect is subject to the limitations of Section 4.2.7. Informational submittals upon which the Architect is not expected to take responsive action may be so identified in the Contract Documents. Submittals that are not required by the Contract Documents may be returned by the Architect without action.

§ 3.12.5 The Contractor shall review for compliance with the Contract Documents, approve and submit to the Architect Shop Drawings, Product Data, Samples and similar submittals required by the Contract Documents in accordance with the submittal schedule approved by the Architect or, in the absence of an approved submittal schedule, with reasonable promptness and in such sequence as to cause no delay in the Work or in the activities of the Owner or of separate contractors.

§ 3.12.6 By submitting Shop Drawings, Product Data, Samples and similar submittals, the Contractor represents to the Owner and Architect that the Contractor has (1) reviewed and approved them, (2) determined and verified materials, field measurements and field construction criteria related thereto, or will do so and (3) checked and coordinated the information contained within such submittals with the requirements of the Work and of the Contract Documents.

§ 3.12.7 The Contractor shall perform no portion of the Work for which the Contract Documents require submittal and review of Shop Drawings, Product Data, Samples or similar submittals until the respective submittal has been approved by the Architect.

§ 3.12.8 The Work shall be in accordance with approved submittals except that the Contractor shall not be relieved of responsibility for deviations from requirements of the Contract Documents by the Architect's approval of Shop Drawings, Product Data, Samples or similar submittals unless the Contractor has specifically informed the Architect in writing of such deviation at the time of submittal and (1) the Architect has given written approval to the specific deviation as a minor change in the Work, or (2) a Change Order or Construction Change Directive has been issued authorizing the deviation. The Contractor shall not be relieved of responsibility for errors or omissions in Shop Drawings, Product Data, Samples or similar submittals by the Architect's approval thereof.

§ 3.12.9 The Contractor shall direct specific attention, in writing or on resubmitted Shop Drawings, Product Data, Samples or similar submittals, to revisions other than those requested by the Architect on previous submittals. In the absence of such written notice, the Architect's approval of a resubmission shall not apply to such revisions.

§ 3.12.10 The Contractor shall not be required to provide professional services that constitute the practice of architecture or engineering unless such services are specifically required by the Contract Documents for a portion of the Work or unless the Contractor needs to provide such services in order to carry out the Contractor's responsibilities for construction means, methods, techniques, sequences and procedures. The Contractor shall not be required to provide professional services in violation of applicable law. If professional design services or certifications by a design professional related to systems, materials or equipment are specifically required of the Contractor by the Contract Documents, the Owner and the Architect will specify all performance and design criteria that such services must satisfy. The Contractor shall cause such services or certifications to be provided by a properly licensed design professional, whose signature and seal shall appear on all drawings, calculations, specifications, certifications, Shop Drawings and other submittals prepared by such professional. Shop Drawings and other submittals related to the Work designed or certified by such professional, if prepared by others, shall bear such professional's written approval when submitted to the Architect. The Owner and the Architect shall be entitled to rely upon the adequacy, accuracy and

AIA Document A201™ – 2007. Copyright © 1911, 1915, 1918, 1925, 1937, 1951, 1958, 1961, 1963, 1966, 1970, 1976, 1987, 1997 and 2007 by The American Institute of Architects. **All rights reserved. WARNING: This AIA® Document is protected by U.S. Copyright Law and International Treaties. Unauthorized reproduction or distribution of this AIA® Document, or any portion of it, may result in severe civil and criminal penalties, and will be prosecuted to the maximum extent possible under the law.** This document was produced by AIA software at 13:15:40 on 05/08/2014 under Order No.9101999414_1 which expires on 12/08/2014, and is not for resale.
User Notes:

(1919367023)

completeness of the services, certifications and approvals performed or provided by such design professionals, provided the Owner and Architect have specified to the Contractor all performance and design criteria that such services must satisfy. Pursuant to this Section 3.12.10, the Architect will review, approve or take other appropriate action on submittals only for the limited purpose of checking for conformance with information given and the design concept expressed in the Contract Documents. The Contractor shall not be responsible for the adequacy of the performance and design criteria specified in the Contract Documents.

§ 3.13 USE OF SITE

The Contractor shall confine operations at the site to areas permitted by applicable laws, statutes, ordinances, codes, rules and regulations, and lawful orders of public authorities and the Contract Documents and shall not unreasonably encumber the site with materials or equipment.

§ 3.14 CUTTING AND PATCHING

§ 3.14.1 The Contractor shall be responsible for cutting, fitting or patching required to complete the Work or to make its parts fit together properly. All areas requiring cutting, fitting and patching shall be restored to the condition existing prior to the cutting, fitting and patching, unless otherwise required by the Contract Documents.

§ 3.14.2 The Contractor shall not damage or endanger a portion of the Work or fully or partially completed construction of the Owner or separate contractors by cutting, patching or otherwise altering such construction, or by excavation. The Contractor shall not cut or otherwise alter such construction by the Owner or a separate contractor except with written consent of the Owner and of such separate contractor; such consent shall not be unreasonably withheld. The Contractor shall not unreasonably withhold from the Owner or a separate contractor the Contractor's consent to cutting or otherwise altering the Work.

§ 3.15 CLEANING UP

§ 3.15.1 The Contractor shall keep the premises and surrounding area free from accumulation of waste materials or rubbish caused by operations under the Contract. At completion of the Work, the Contractor shall remove waste materials, rubbish, the Contractor's tools, construction equipment, machinery and surplus materials from and about the Project.

§ 3.15.2 If the Contractor fails to clean up as provided in the Contract Documents, the Owner may do so and Owner shall be entitled to reimbursement from the Contractor.

§ 3.16 ACCESS TO WORK

The Contractor shall provide the Owner and Architect access to the Work in preparation and progress wherever located.

§ 3.17 ROYALTIES, PATENTS AND COPYRIGHTS

The Contractor shall pay all royalties and license fees. The Contractor shall defend suits or claims for infringement of copyrights and patent rights and shall hold the Owner and Architect harmless from loss on account thereof, but shall not be responsible for such defense or loss when a particular design, process or product of a particular manufacturer or manufacturers is required by the Contract Documents, or where the copyright violations are contained in Drawings, Specifications or other documents prepared by the Owner or Architect. However, if the Contractor has reason to believe that the required design, process or product is an infringement of a copyright or a patent, the Contractor shall be responsible for such loss unless such information is promptly furnished to the Architect.

§ 3.18 INDEMNIFICATION

§ 3.18.1 To the fullest extent permitted by law the Contractor shall indemnify and hold harmless the Owner, Architect, Architect's consultants, and agents and employees of any of them from and against claims, damages, losses and expenses, including but not limited to attorneys' fees, arising out of or resulting from performance of the Work, provided that such claim, damage, loss or expense is attributable to bodily injury, sickness, disease or death, or to injury to or destruction of tangible property (other than the Work itself), but only to the extent caused by the negligent acts or omissions of the Contractor, a Subcontractor, anyone directly or indirectly employed by them or anyone for whose acts they may be liable, regardless of whether or not such claim, damage, loss or expense is caused in part by a party indemnified hereunder. Such obligation shall not be construed to negate, abridge, or reduce other rights or obligations of indemnity that would otherwise exist as to a party or person described in this Section 3.18.

AIA Document A201™ – 2007. Copyright © 1911, 1915, 1918, 1925, 1937, 1951, 1958, 1961, 1963, 1966, 1970, 1976, 1987, 1997 and 2007 by The American Institute of Architects. **All rights reserved. WARNING: This AIA® Document is protected by U.S. Copyright Law and International Treaties. Unauthorized reproduction or distribution of this AIA® Document, or any portion of it, may result in severe civil and criminal penalties, and will be prosecuted to the maximum extent possible under the law.** This document was produced by AIA software at 13:15:40 on 05/08/2014 under Order No.9101999414_1 which expires on 12/08/2014, and is not for resale.
User Notes:

§ 3.18.2 In claims against any person or entity indemnified under this Section 3.18 by an employee of the Contractor, a Subcontractor, anyone directly or indirectly employed by them or anyone for whose acts they may be liable, the indemnification obligation under Section 3.18.1 shall not be limited by a limitation on amount or type of damages, compensation or benefits payable by or for the Contractor or a Subcontractor under workers' compensation acts, disability benefit acts or other employee benefit acts.

ARTICLE 4 ARCHITECT

§ 4.1 GENERAL

§ 4.1.1 The Owner shall retain an architect lawfully licensed to practice architecture or an entity lawfully practicing architecture in the jurisdiction where the Project is located. That person or entity is identified as the Architect in the Agreement and is referred to throughout the Contract Documents as if singular in number.

§ 4.1.2 Duties, responsibilities and limitations of authority of the Architect as set forth in the Contract Documents shall not be restricted, modified or extended without written consent of the Owner, Contractor and Architect. Consent shall not be unreasonably withheld.

§ 4.1.3 If the employment of the Architect is terminated, the Owner shall employ a successor architect as to whom the Contractor has no reasonable objection and whose status under the Contract Documents shall be that of the Architect.

§ 4.2 ADMINISTRATION OF THE CONTRACT

§ 4.2.1 The Architect will provide administration of the Contract as described in the Contract Documents and will be an Owner's representative during construction until the date the Architect issues the final Certificate for Payment. The Architect will have authority to act on behalf of the Owner only to the extent provided in the Contract Documents.

§ 4.2.2 The Architect will visit the site at intervals appropriate to the stage of construction, or as otherwise agreed with the Owner, to become generally familiar with the progress and quality of the portion of the Work completed, and to determine in general if the Work observed is being performed in a manner indicating that the Work, when fully completed, will be in accordance with the Contract Documents. However, the Architect will not be required to make exhaustive or continuous on-site inspections to check the quality or quantity of the Work. The Architect will not have control over, charge of, or responsibility for, the construction means, methods, techniques, sequences or procedures, or for the safety precautions and programs in connection with the Work, since these are solely the Contractor's rights and responsibilities under the Contract Documents, except as provided in Section 3.3.1.

§ 4.2.3 On the basis of the site visits, the Architect will keep the Owner reasonably informed about the progress and quality of the portion of the Work completed, and report to the Owner (1) known deviations from the Contract Documents and from the most recent construction schedule submitted by the Contractor, and (2) defects and deficiencies observed in the Work. The Architect will not be responsible for the Contractor's failure to perform the Work in accordance with the requirements of the Contract Documents. The Architect will not have control over or charge of and will not be responsible for acts or omissions of the Contractor, Subcontractors, or their agents or employees, or any other persons or entities performing portions of the Work.

§ 4.2.4 COMMUNICATIONS FACILITATING CONTRACT ADMINISTRATION

Except as otherwise provided in the Contract Documents or when direct communications have been specially authorized, the Owner and Contractor shall endeavor to communicate with each other through the Architect about matters arising out of or relating to the Contract. Communications by and with the Architect's consultants shall be through the Architect. Communications by and with Subcontractors and material suppliers shall be through the Contractor. Communications by and with separate contractors shall be through the Owner.

§ 4.2.5 Based on the Architect's evaluations of the Contractor's Applications for Payment, the Architect will review and certify the amounts due the Contractor and will issue Certificates for Payment in such amounts.

§ 4.2.6 The Architect has authority to reject Work that does not conform to the Contract Documents. Whenever the Architect considers it necessary or advisable, the Architect will have authority to require inspection or testing of the Work in accordance with Sections 13.5.2 and 13.5.3, whether or not such Work is fabricated, installed or completed. However, neither this authority of the Architect nor a decision made in good faith either to exercise or not to exercise such authority shall give rise to a duty or responsibility of the Architect to the Contractor, Subcontractors, material and equipment suppliers, their agents or employees, or other persons or entities performing portions of the Work.

Init.
/
AIA Document A201™ – 2007. Copyright © 1911, 1915, 1918, 1925, 1937, 1951, 1958, 1961, 1963, 1966, 1970, 1976, 1987, 1997 and 2007 by The American Institute of Architects. All rights reserved. WARNING: This AIA® Document is protected by U.S. Copyright Law and International Treaties. Unauthorized reproduction or distribution of this AIA® Document, or any portion of it, may result in severe civil and criminal penalties, and will be prosecuted to the maximum extent possible under the law. This document was produced by AIA software at 13:15:40 on 05/08/2014 under Order No.9101999414_1 which expires on 12/08/2014, and is not for resale.
User Notes:
(1919367023)

§ **4.2.7** The Architect will review and approve, or take other appropriate action upon, the Contractor's submittals such as Shop Drawings, Product Data and Samples, but only for the limited purpose of checking for conformance with information given and the design concept expressed in the Contract Documents. The Architect's action will be taken in accordance with the submittal schedule approved by the Architect or, in the absence of an approved submittal schedule, with reasonable promptness while allowing sufficient time in the Architect's professional judgment to permit adequate review. Review of such submittals is not conducted for the purpose of determining the accuracy and completeness of other details such as dimensions and quantities, or for substantiating instructions for installation or performance of equipment or systems, all of which remain the responsibility of the Contractor as required by the Contract Documents. The Architect's review of the Contractor's submittals shall not relieve the Contractor of the obligations under Sections 3.3, 3.5 and 3.12. The Architect's review shall not constitute approval of safety precautions or, unless otherwise specifically stated by the Architect, of any construction means, methods, techniques, sequences or procedures. The Architect's approval of a specific item shall not indicate approval of an assembly of which the item is a component.

§ **4.2.8** The Architect will prepare Change Orders and Construction Change Directives, and may authorize minor changes in the Work as provided in Section 7.4. The Architect will investigate and make determinations and recommendations regarding concealed and unknown conditions as provided in Section 3.7.4.

§ **4.2.9** The Architect will conduct inspections to determine the date or dates of Substantial Completion and the date of final completion; issue Certificates of Substantial Completion pursuant to Section 9.8; receive and forward to the Owner, for the Owner's review and records, written warranties and related documents required by the Contract and assembled by the Contractor pursuant to Section 9.10; and issue a final Certificate for Payment pursuant to Section 9.10.

§ **4.2.10** If the Owner and Architect agree, the Architect will provide one or more project representatives to assist in carrying out the Architect's responsibilities at the site. The duties, responsibilities and limitations of authority of such project representatives shall be as set forth in an exhibit to be incorporated in the Contract Documents.

§ **4.2.11** The Architect will interpret and decide matters concerning performance under, and requirements of, the Contract Documents on written request of either the Owner or Contractor. The Architect's response to such requests will be made in writing within any time limits agreed upon or otherwise with reasonable promptness.

§ **4.2.12** Interpretations and decisions of the Architect will be consistent with the intent of, and reasonably inferable from, the Contract Documents and will be in writing or in the form of drawings. When making such interpretations and decisions, the Architect will endeavor to secure faithful performance by both Owner and Contractor, will not show partiality to either and will not be liable for results of interpretations or decisions rendered in good faith.

§ **4.2.13** The Architect's decisions on matters relating to aesthetic effect will be final if consistent with the intent expressed in the Contract Documents.

§ **4.2.14** The Architect will review and respond to requests for information about the Contract Documents. The Architect's response to such requests will be made in writing within any time limits agreed upon or otherwise with reasonable promptness. If appropriate, the Architect will prepare and issue supplemental Drawings and Specifications in response to the requests for information.

ARTICLE 5 SUBCONTRACTORS

§ 5.1 DEFINITIONS

§ **5.1.1** A Subcontractor is a person or entity who has a direct contract with the Contractor to perform a portion of the Work at the site. The term "Subcontractor" is referred to throughout the Contract Documents as if singular in number and means a Subcontractor or an authorized representative of the Subcontractor. The term "Subcontractor" does not include a separate contractor or subcontractors of a separate contractor.

§ **5.1.2** A Sub-subcontractor is a person or entity who has a direct or indirect contract with a Subcontractor to perform a portion of the Work at the site. The term "Sub-subcontractor" is referred to throughout the Contract Documents as if singular in number and means a Sub-subcontractor or an authorized representative of the Sub-subcontractor.

AIA Document A201™ – 2007. Copyright © 1911, 1915, 1918, 1925, 1937, 1951, 1958, 1961, 1963, 1966, 1970, 1976, 1987, 1997 and 2007 by The American Institute of Architects. **All rights reserved. WARNING: This AIA® Document is protected by U.S. Copyright Law and International Treaties. Unauthorized reproduction or distribution of this AIA® Document, or any portion of it, may result in severe civil and criminal penalties, and will be prosecuted to the maximum extent possible under the law.** This document was produced by AIA software at 13:15:40 on 05/08/2014 under Order No.9101999414_1 which expires on 12/08/2014, and is not for resale.
User Notes:

§ 5.2 AWARD OF SUBCONTRACTS AND OTHER CONTRACTS FOR PORTIONS OF THE WORK

§ 5.2.1 Unless otherwise stated in the Contract Documents or the bidding requirements, the Contractor, as soon as practicable after award of the Contract, shall furnish in writing to the Owner through the Architect the names of persons or entities (including those who are to furnish materials or equipment fabricated to a special design) proposed for each principal portion of the Work. The Architect may reply within 14 days to the Contractor in writing stating (1) whether the Owner or the Architect has reasonable objection to any such proposed person or entity or (2) that the Architect requires additional time for review. Failure of the Owner or Architect to reply within the 14-day period shall constitute notice of no reasonable objection.

§ 5.2.2 The Contractor shall not contract with a proposed person or entity to whom the Owner or Architect has made reasonable and timely objection. The Contractor shall not be required to contract with anyone to whom the Contractor has made reasonable objection.

§ 5.2.3 If the Owner or Architect has reasonable objection to a person or entity proposed by the Contractor, the Contractor shall propose another to whom the Owner or Architect has no reasonable objection. If the proposed but rejected Subcontractor was reasonably capable of performing the Work, the Contract Sum and Contract Time shall be increased or decreased by the difference, if any, occasioned by such change, and an appropriate Change Order shall be issued before commencement of the substitute Subcontractor's Work. However, no increase in the Contract Sum or Contract Time shall be allowed for such change unless the Contractor has acted promptly and responsively in submitting names as required.

§ 5.2.4 The Contractor shall not substitute a Subcontractor, person or entity previously selected if the Owner or Architect makes reasonable objection to such substitution.

§ 5.3 SUBCONTRACTUAL RELATIONS

By appropriate agreement, written where legally required for validity, the Contractor shall require each Subcontractor, to the extent of the Work to be performed by the Subcontractor, to be bound to the Contractor by terms of the Contract Documents, and to assume toward the Contractor all the obligations and responsibilities, including the responsibility for safety of the Subcontractor's Work, which the Contractor, by these Documents, assumes toward the Owner and Architect. Each subcontract agreement shall preserve and protect the rights of the Owner and Architect under the Contract Documents with respect to the Work to be performed by the Subcontractor so that subcontracting thereof will not prejudice such rights, and shall allow to the Subcontractor, unless specifically provided otherwise in the subcontract agreement, the benefit of all rights, remedies and redress against the Contractor that the Contractor, by the Contract Documents, has against the Owner. Where appropriate, the Contractor shall require each Subcontractor to enter into similar agreements with Sub-subcontractors. The Contractor shall make available to each proposed Subcontractor, prior to the execution of the subcontract agreement, copies of the Contract Documents to which the Subcontractor will be bound, and, upon written request of the Subcontractor, identify to the Subcontractor terms and conditions of the proposed subcontract agreement that may be at variance with the Contract Documents. Subcontractors will similarly make copies of applicable portions of such documents available to their respective proposed Sub-subcontractors.

§ 5.4 CONTINGENT ASSIGNMENT OF SUBCONTRACTS

§ 5.4.1 Each subcontract agreement for a portion of the Work is assigned by the Contractor to the Owner, provided that

- .1 assignment is effective only after termination of the Contract by the Owner for cause pursuant to Section 14.2 and only for those subcontract agreements that the Owner accepts by notifying the Subcontractor and Contractor in writing; and
- .2 assignment is subject to the prior rights of the surety, if any, obligated under bond relating to the Contract.

When the Owner accepts the assignment of a subcontract agreement, the Owner assumes the Contractor's rights and obligations under the subcontract.

§ 5.4.2 Upon such assignment, if the Work has been suspended for more than 30 days, the Subcontractor's compensation shall be equitably adjusted for increases in cost resulting from the suspension.

§ 5.4.3 Upon such assignment to the Owner under this Section 5.4, the Owner may further assign the subcontract to a successor contractor or other entity. If the Owner assigns the subcontract to a successor contractor or other entity, the

AIA Document A201™ – 2007. Copyright © 1911, 1915, 1918, 1925, 1937, 1951, 1958, 1961, 1963, 1966, 1970, 1976, 1987, 1997 and 2007 by The American Institute of Architects. **All rights reserved. WARNING: This AIA® Document is protected by U.S. Copyright Law and International Treaties. Unauthorized reproduction or distribution of this AIA® Document, or any portion of it, may result in severe civil and criminal penalties, and will be prosecuted to the maximum extent possible under the law.** This document was produced by AIA software at 13:15:40 on 05/08/2014 under Order No.9101999414_1 which expires on 12/08/2014, and is not for resale.
User Notes:

(1919367023)

Owner shall nevertheless remain legally responsible for all of the successor contractor's obligations under the subcontract.

ARTICLE 6 CONSTRUCTION BY OWNER OR BY SEPARATE CONTRACTORS

§ 6.1 OWNER'S RIGHT TO PERFORM CONSTRUCTION AND TO AWARD SEPARATE CONTRACTS

§ 6.1.1 The Owner reserves the right to perform construction or operations related to the Project with the Owner's own forces, and to award separate contracts in connection with other portions of the Project or other construction or operations on the site under Conditions of the Contract identical or substantially similar to these including those portions related to insurance and waiver of subrogation. If the Contractor claims that delay or additional cost is involved because of such action by the Owner, the Contractor shall make such Claim as provided in Article 15.

§ 6.1.2 When separate contracts are awarded for different portions of the Project or other construction or operations on the site, the term "Contractor" in the Contract Documents in each case shall mean the Contractor who executes each separate Owner-Contractor Agreement.

§ 6.1.3 The Owner shall provide for coordination of the activities of the Owner's own forces and of each separate contractor with the Work of the Contractor, who shall cooperate with them. The Contractor shall participate with other separate contractors and the Owner in reviewing their construction schedules. The Contractor shall make any revisions to the construction schedule deemed necessary after a joint review and mutual agreement. The construction schedules shall then constitute the schedules to be used by the Contractor, separate contractors and the Owner until subsequently revised.

§ 6.1.4 Unless otherwise provided in the Contract Documents, when the Owner performs construction or operations related to the Project with the Owner's own forces, the Owner shall be deemed to be subject to the same obligations and to have the same rights that apply to the Contractor under the Conditions of the Contract, including, without excluding others, those stated in Article 3, this Article 6 and Articles 10, 11 and 12.

§ 6.2 MUTUAL RESPONSIBILITY

§ 6.2.1 The Contractor shall afford the Owner and separate contractors reasonable opportunity for introduction and storage of their materials and equipment and performance of their activities, and shall connect and coordinate the Contractor's construction and operations with theirs as required by the Contract Documents.

§ 6.2.2 If part of the Contractor's Work depends for proper execution or results upon construction or operations by the Owner or a separate contractor, the Contractor shall, prior to proceeding with that portion of the Work, promptly report to the Architect apparent discrepancies or defects in such other construction that would render it unsuitable for such proper execution and results. Failure of the Contractor so to report shall constitute an acknowledgment that the Owner's or separate contractor's completed or partially completed construction is fit and proper to receive the Contractor's Work, except as to defects not then reasonably discoverable.

§ 6.2.3 The Contractor shall reimburse the Owner for costs the Owner incurs that are payable to a separate contractor because of the Contractor's delays, improperly timed activities or defective construction. The Owner shall be responsible to the Contractor for costs the Contractor incurs because of a separate contractor's delays, improperly timed activities, damage to the Work or defective construction.

§ 6.2.4 The Contractor shall promptly remedy damage the Contractor wrongfully causes to completed or partially completed construction or to property of the Owner or separate contractors as provided in Section 10.2.5.

§ 6.2.5 The Owner and each separate contractor shall have the same responsibilities for cutting and patching as are described for the Contractor in Section 3.14.

§ 6.3 OWNER'S RIGHT TO CLEAN UP

If a dispute arises among the Contractor, separate contractors and the Owner as to the responsibility under their respective contracts for maintaining the premises and surrounding area free from waste materials and rubbish, the Owner may clean up and the Architect will allocate the cost among those responsible.

Init.
/

AIA Document A201™ – 2007. Copyright © 1911, 1915, 1918, 1925, 1937, 1951, 1958, 1961, 1963, 1966, 1970, 1976, 1987, 1997 and 2007 by The American Institute of Architects. **All rights reserved. WARNING: This AIA® Document is protected by U.S. Copyright Law and International Treaties. Unauthorized reproduction or distribution of this AIA® Document, or any portion of it, may result in severe civil and criminal penalties, and will be prosecuted to the maximum extent possible under the law.** This document was produced by AIA software at 13:15:40 on 05/08/2014 under Order No.9101999414_1 which expires on 12/08/2014, and is not for resale.
User Notes: (1919367023)

ARTICLE 7 CHANGES IN THE WORK

§ 7.1 GENERAL

§ 7.1.1 Changes in the Work may be accomplished after execution of the Contract, and without invalidating the Contract, by Change Order, Construction Change Directive or order for a minor change in the Work, subject to the limitations stated in this Article 7 and elsewhere in the Contract Documents.

§ 7.1.2 A Change Order shall be based upon agreement among the Owner, Contractor and Architect; a Construction Change Directive requires agreement by the Owner and Architect and may or may not be agreed to by the Contractor; an order for a minor change in the Work may be issued by the Architect alone.

§ 7.1.3 Changes in the Work shall be performed under applicable provisions of the Contract Documents, and the Contractor shall proceed promptly, unless otherwise provided in the Change Order, Construction Change Directive or order for a minor change in the Work.

§ 7.2 CHANGE ORDERS

§ 7.2.1 A Change Order is a written instrument prepared by the Architect and signed by the Owner, Contractor and Architect stating their agreement upon all of the following:

.1 The change in the Work;
.2 The amount of the adjustment, if any, in the Contract Sum; and
.3 The extent of the adjustment, if any, in the Contract Time.

§ 7.3 CONSTRUCTION CHANGE DIRECTIVES

§ 7.3.1 A Construction Change Directive is a written order prepared by the Architect and signed by the Owner and Architect, directing a change in the Work prior to agreement on adjustment, if any, in the Contract Sum or Contract Time, or both. The Owner may by Construction Change Directive, without invalidating the Contract, order changes in the Work within the general scope of the Contract consisting of additions, deletions or other revisions, the Contract Sum and Contract Time being adjusted accordingly.

§ 7.3.2 A Construction Change Directive shall be used in the absence of total agreement on the terms of a Change Order.

§ 7.3.3 If the Construction Change Directive provides for an adjustment to the Contract Sum, the adjustment shall be based on one of the following methods:

.1 Mutual acceptance of a lump sum properly itemized and supported by sufficient substantiating data to permit evaluation;
.2 Unit prices stated in the Contract Documents or subsequently agreed upon;
.3 Cost to be determined in a manner agreed upon by the parties and a mutually acceptable fixed or percentage fee; or
.4 As provided in Section 7.3.7.

§ 7.3.4 If unit prices are stated in the Contract Documents or subsequently agreed upon, and if quantities originally contemplated are materially changed in a proposed Change Order or Construction Change Directive so that application of such unit prices to quantities of Work proposed will cause substantial inequity to the Owner or Contractor, the applicable unit prices shall be equitably adjusted.

§ 7.3.5 Upon receipt of a Construction Change Directive, the Contractor shall promptly proceed with the change in the Work involved and advise the Architect of the Contractor's agreement or disagreement with the method, if any, provided in the Construction Change Directive for determining the proposed adjustment in the Contract Sum or Contract Time.

§ 7.3.6 A Construction Change Directive signed by the Contractor indicates the Contractor's agreement therewith, including adjustment in Contract Sum and Contract Time or the method for determining them. Such agreement shall be effective immediately and shall be recorded as a Change Order.

§ 7.3.7 If the Contractor does not respond promptly or disagrees with the method for adjustment in the Contract Sum, the Architect shall determine the method and the adjustment on the basis of reasonable expenditures and savings of those performing the Work attributable to the change, including, in case of an increase in the Contract Sum, an amount

AIA Document A201™ – 2007. Copyright © 1911, 1915, 1918, 1925, 1937, 1951, 1958, 1961, 1963, 1966, 1970, 1976, 1987, 1997 and 2007 by The American Institute of Architects. **All rights reserved. WARNING: This AIA® Document is protected by U.S. Copyright Law and International Treaties. Unauthorized reproduction or distribution of this AIA® Document, or any portion of it, may result in severe civil and criminal penalties, and will be prosecuted to the maximum extent possible under the law.** This document was produced by AIA software at 13:15:40 on 05/08/2014 under Order No.9101999414_1 which expires on 12/08/2014, and is not for resale.
User Notes:

(1919367023)

for overhead and profit as set forth in the Agreement, or if no such amount is set forth in the Agreement, a reasonable amount. In such case, and also under Section 7.3.3.3, the Contractor shall keep and present, in such form as the Architect may prescribe, an itemized accounting together with appropriate supporting data. Unless otherwise provided in the Contract Documents, costs for the purposes of this Section 7.3.7 shall be limited to the following:

.1 Costs of labor, including social security, old age and unemployment insurance, fringe benefits required by agreement or custom, and workers' compensation insurance;

.2 Costs of materials, supplies and equipment, including cost of transportation, whether incorporated or consumed;

.3 Rental costs of machinery and equipment, exclusive of hand tools, whether rented from the Contractor or others;

.4 Costs of premiums for all bonds and insurance, permit fees, and sales, use or similar taxes related to the Work; and

.5 Additional costs of supervision and field office personnel directly attributable to the change.

§ 7.3.8 The amount of credit to be allowed by the Contractor to the Owner for a deletion or change that results in a net decrease in the Contract Sum shall be actual net cost as confirmed by the Architect. When both additions and credits covering related Work or substitutions are involved in a change, the allowance for overhead and profit shall be figured on the basis of net increase, if any, with respect to that change.

§ 7.3.9 Pending final determination of the total cost of a Construction Change Directive to the Owner, the Contractor may request payment for Work completed under the Construction Change Directive in Applications for Payment. The Architect will make an interim determination for purposes of monthly certification for payment for those costs and certify for payment the amount that the Architect determines, in the Architect's professional judgment, to be reasonably justified. The Architect's interim determination of cost shall adjust the Contract Sum on the same basis as a Change Order, subject to the right of either party to disagree and assert a Claim in accordance with Article 15.

§ 7.3.10 When the Owner and Contractor agree with a determination made by the Architect concerning the adjustments in the Contract Sum and Contract Time, or otherwise reach agreement upon the adjustments, such agreement shall be effective immediately and the Architect will prepare a Change Order. Change Orders may be issued for all or any part of a Construction Change Directive.

§ 7.4 MINOR CHANGES IN THE WORK

The Architect has authority to order minor changes in the Work not involving adjustment in the Contract Sum or extension of the Contract Time and not inconsistent with the intent of the Contract Documents. Such changes will be effected by written order signed by the Architect and shall be binding on the Owner and Contractor.

ARTICLE 8 TIME

§ 8.1 DEFINITIONS

§ 8.1.1 Unless otherwise provided, Contract Time is the period of time, including authorized adjustments, allotted in the Contract Documents for Substantial Completion of the Work.

§ 8.1.2 The date of commencement of the Work is the date established in the Agreement.

§ 8.1.3 The date of Substantial Completion is the date certified by the Architect in accordance with Section 9.8.

§ 8.1.4 The term "day" as used in the Contract Documents shall mean calendar day unless otherwise specifically defined.

§ 8.2 PROGRESS AND COMPLETION

§ 8.2.1 Time limits stated in the Contract Documents are of the essence of the Contract. By executing the Agreement the Contractor confirms that the Contract Time is a reasonable period for performing the Work.

§ 8.2.2 The Contractor shall not knowingly, except by agreement or instruction of the Owner in writing, prematurely commence operations on the site or elsewhere prior to the effective date of insurance required by Article 11 to be furnished by the Contractor and Owner. The date of commencement of the Work shall not be changed by the effective date of such insurance.

Init.

/

AIA Document A201™ – 2007. Copyright © 1911, 1915, 1918, 1925, 1937, 1951, 1958, 1961, 1963, 1966, 1970, 1976, 1987, 1997 and 2007 by The American Institute of Architects. **All rights reserved. WARNING: This AIA® Document is protected by U.S. Copyright Law and International Treaties. Unauthorized reproduction or distribution of this AIA® Document, or any portion of it, may result in severe civil and criminal penalties, and will be prosecuted to the maximum extent possible under the law.** This document was produced by AIA software at 13:15:40 on 05/08/2014 under Order No.9101999414_1 which expires on 12/08/2014, and is not for resale.
User Notes: (1919367023)

§ 8.2.3 The Contractor shall proceed expeditiously with adequate forces and shall achieve Substantial Completion within the Contract Time.

§ 8.3 DELAYS AND EXTENSIONS OF TIME

§ 8.3.1 If the Contractor is delayed at any time in the commencement or progress of the Work by an act or neglect of the Owner or Architect, or of an employee of either, or of a separate contractor employed by the Owner; or by changes ordered in the Work; or by labor disputes, fire, unusual delay in deliveries, unavoidable casualties or other causes beyond the Contractor's control; or by delay authorized by the Owner pending mediation and arbitration; or by other causes that the Architect determines may justify delay, then the Contract Time shall be extended by Change Order for such reasonable time as the Architect may determine.

§ 8.3.2 Claims relating to time shall be made in accordance with applicable provisions of Article 15.

§ 8.3.3 This Section 8.3 does not preclude recovery of damages for delay by either party under other provisions of the Contract Documents.

ARTICLE 9 PAYMENTS AND COMPLETION

§ 9.1 CONTRACT SUM

The Contract Sum is stated in the Agreement and, including authorized adjustments, is the total amount payable by the Owner to the Contractor for performance of the Work under the Contract Documents.

§ 9.2 SCHEDULE OF VALUES

Where the Contract is based on a stipulated sum or Guaranteed Maximum Price, the Contractor shall submit to the Architect, before the first Application for Payment, a schedule of values allocating the entire Contract Sum to the various portions of the Work and prepared in such form and supported by such data to substantiate its accuracy as the Architect may require. This schedule, unless objected to by the Architect, shall be used as a basis for reviewing the Contractor's Applications for Payment.

§ 9.3 APPLICATIONS FOR PAYMENT

§ 9.3.1 At least ten days before the date established for each progress payment, the Contractor shall submit to the Architect an itemized Application for Payment prepared in accordance with the schedule of values, if required under Section 9.2, for completed portions of the Work. Such application shall be notarized, if required, and supported by such data substantiating the Contractor's right to payment as the Owner or Architect may require, such as copies of requisitions from Subcontractors and material suppliers, and shall reflect retainage if provided for in the Contract Documents.

§ 9.3.1.1 As provided in Section 7.3.9, such applications may include requests for payment on account of changes in the Work that have been properly authorized by Construction Change Directives, or by interim determinations of the Architect, but not yet included in Change Orders.

§ 9.3.1.2 Applications for Payment shall not include requests for payment for portions of the Work for which the Contractor does not intend to pay a Subcontractor or material supplier, unless such Work has been performed by others whom the Contractor intends to pay.

§ 9.3.2 Unless otherwise provided in the Contract Documents, payments shall be made on account of materials and equipment delivered and suitably stored at the site for subsequent incorporation in the Work. If approved in advance by the Owner, payment may similarly be made for materials and equipment suitably stored off the site at a location agreed upon in writing. Payment for materials and equipment stored on or off the site shall be conditioned upon compliance by the Contractor with procedures satisfactory to the Owner to establish the Owner's title to such materials and equipment or otherwise protect the Owner's interest, and shall include the costs of applicable insurance, storage and transportation to the site for such materials and equipment stored off the site.

§ 9.3.3 The Contractor warrants that title to all Work covered by an Application for Payment will pass to the Owner no later than the time of payment. The Contractor further warrants that upon submittal of an Application for Payment all Work for which Certificates for Payment have been previously issued and payments received from the Owner shall, to the best of the Contractor's knowledge, information and belief, be free and clear of liens, claims, security interests or

AIA Document A201™ – 2007. Copyright © 1911, 1915, 1918, 1925, 1937, 1951, 1958, 1961, 1963, 1966, 1970, 1976, 1987, 1997 and 2007 by The American Institute of Architects. All rights reserved. WARNING: This AIA® Document is protected by U.S. Copyright Law and International Treaties. Unauthorized reproduction or distribution of this AIA® Document, or any portion of it, may result in severe civil and criminal penalties, and will be prosecuted to the maximum extent possible under the law. This document was produced by AIA software at 13:15:40 on 05/08/2014 under Order No.9101999414_1 which expires on 12/08/2014, and is not for resale.
User Notes:

(1919367023)

encumbrances in favor of the Contractor, Subcontractors, material suppliers, or other persons or entities making a claim by reason of having provided labor, materials and equipment relating to the Work.

§ 9.4 CERTIFICATES FOR PAYMENT

§ 9.4.1 The Architect will, within seven days after receipt of the Contractor's Application for Payment, either issue to the Owner a Certificate for Payment, with a copy to the Contractor, for such amount as the Architect determines is properly due, or notify the Contractor and Owner in writing of the Architect's reasons for withholding certification in whole or in part as provided in Section 9.5.1.

§ 9.4.2 The issuance of a Certificate for Payment will constitute a representation by the Architect to the Owner, based on the Architect's evaluation of the Work and the data comprising the Application for Payment, that, to the best of the Architect's knowledge, information and belief, the Work has progressed to the point indicated and that the quality of the Work is in accordance with the Contract Documents. The foregoing representations are subject to an evaluation of the Work for conformance with the Contract Documents upon Substantial Completion, to results of subsequent tests and inspections, to correction of minor deviations from the Contract Documents prior to completion and to specific qualifications expressed by the Architect. The issuance of a Certificate for Payment will further constitute a representation that the Contractor is entitled to payment in the amount certified. However, the issuance of a Certificate for Payment will not be a representation that the Architect has (1) made exhaustive or continuous on-site inspections to check the quality or quantity of the Work, (2) reviewed construction means, methods, techniques, sequences or procedures, (3) reviewed copies of requisitions received from Subcontractors and material suppliers and other data requested by the Owner to substantiate the Contractor's right to payment, or (4) made examination to ascertain how or for what purpose the Contractor has used money previously paid on account of the Contract Sum.

§ 9.5 DECISIONS TO WITHHOLD CERTIFICATION

§ 9.5.1 The Architect may withhold a Certificate for Payment in whole or in part, to the extent reasonably necessary to protect the Owner, if in the Architect's opinion the representations to the Owner required by Section 9.4.2 cannot be made. If the Architect is unable to certify payment in the amount of the Application, the Architect will notify the Contractor and Owner as provided in Section 9.4.1. If the Contractor and Architect cannot agree on a revised amount, the Architect will promptly issue a Certificate for Payment for the amount for which the Architect is able to make such representations to the Owner. The Architect may also withhold a Certificate for Payment or, because of subsequently discovered evidence, may nullify the whole or a part of a Certificate for Payment previously issued, to such extent as may be necessary in the Architect's opinion to protect the Owner from loss for which the Contractor is responsible, including loss resulting from acts and omissions described in Section 3.3.2, because of

- **.1** defective Work not remedied;
- **.2** third party claims filed or reasonable evidence indicating probable filing of such claims unless security acceptable to the Owner is provided by the Contractor;
- **.3** failure of the Contractor to make payments properly to Subcontractors or for labor, materials or equipment;
- **.4** reasonable evidence that the Work cannot be completed for the unpaid balance of the Contract Sum;
- **.5** damage to the Owner or a separate contractor;
- **.6** reasonable evidence that the Work will not be completed within the Contract Time, and that the unpaid balance would not be adequate to cover actual or liquidated damages for the anticipated delay; or
- **.7** repeated failure to carry out the Work in accordance with the Contract Documents.

§ 9.5.2 When the above reasons for withholding certification are removed, certification will be made for amounts previously withheld.

§ 9.5.3 If the Architect withholds certification for payment under Section 9.5.1.3, the Owner may, at its sole option, issue joint checks to the Contractor and to any Subcontractor or material or equipment suppliers to whom the Contractor failed to make payment for Work properly performed or material or equipment suitably delivered. If the Owner makes payments by joint check, the Owner shall notify the Architect and the Architect will reflect such payment on the next Certificate for Payment.

§ 9.6 PROGRESS PAYMENTS

§ 9.6.1 After the Architect has issued a Certificate for Payment, the Owner shall make payment in the manner and within the time provided in the Contract Documents, and shall so notify the Architect.

AIA Document A201™ – 2007. Copyright © 1911, 1915, 1918, 1925, 1937, 1951, 1958, 1961, 1963, 1966, 1970, 1976, 1987, 1997 and 2007 by The American Institute of Architects. **All rights reserved. WARNING: This AIA® Document is protected by U.S. Copyright Law and International Treaties. Unauthorized reproduction or distribution of this AIA® Document, or any portion of it, may result in severe civil and criminal penalties, and will be prosecuted to the maximum extent possible under the law.** This document was produced by AIA software at 13:15:40 on 05/08/2014 under Order No.9101999414_1 which expires on 12/08/2014, and is not for resale.
User Notes: (1919367023)

§ 9.6.2 The Contractor shall pay each Subcontractor no later than seven days after receipt of payment from the Owner the amount to which the Subcontractor is entitled, reflecting percentages actually retained from payments to the Contractor on account of the Subcontractor's portion of the Work. The Contractor shall, by appropriate agreement with each Subcontractor, require each Subcontractor to make payments to Sub-subcontractors in a similar manner.

§ 9.6.3 The Architect will, on request, furnish to a Subcontractor, if practicable, information regarding percentages of completion or amounts applied for by the Contractor and action taken thereon by the Architect and Owner on account of portions of the Work done by such Subcontractor.

§ 9.6.4 The Owner has the right to request written evidence from the Contractor that the Contractor has properly paid Subcontractors and material and equipment suppliers amounts paid by the Owner to the Contractor for subcontracted Work. If the Contractor fails to furnish such evidence within seven days, the Owner shall have the right to contact Subcontractors to ascertain whether they have been properly paid. Neither the Owner nor Architect shall have an obligation to pay or to see to the payment of money to a Subcontractor, except as may otherwise be required by law.

§ 9.6.5 Contractor payments to material and equipment suppliers shall be treated in a manner similar to that provided in Sections 9.6.2, 9.6.3 and 9.6.4.

§ 9.6.6 A Certificate for Payment, a progress payment, or partial or entire use or occupancy of the Project by the Owner shall not constitute acceptance of Work not in accordance with the Contract Documents.

§ 9.6.7 Unless the Contractor provides the Owner with a payment bond in the full penal sum of the Contract Sum, payments received by the Contractor for Work properly performed by Subcontractors and suppliers shall be held by the Contractor for those Subcontractors or suppliers who performed Work or furnished materials, or both, under contract with the Contractor for which payment was made by the Owner. Nothing contained herein shall require money to be placed in a separate account and not commingled with money of the Contractor, shall create any fiduciary liability or tort liability on the part of the Contractor for breach of trust or shall entitle any person or entity to an award of punitive damages against the Contractor for breach of the requirements of this provision.

§ 9.7 FAILURE OF PAYMENT

If the Architect does not issue a Certificate for Payment, through no fault of the Contractor, within seven days after receipt of the Contractor's Application for Payment, or if the Owner does not pay the Contractor within seven days after the date established in the Contract Documents the amount certified by the Architect or awarded by binding dispute resolution, then the Contractor may, upon seven additional days' written notice to the Owner and Architect, stop the Work until payment of the amount owing has been received. The Contract Time shall be extended appropriately and the Contract Sum shall be increased by the amount of the Contractor's reasonable costs of shut-down, delay and start-up, plus interest as provided for in the Contract Documents.

§ 9.8 SUBSTANTIAL COMPLETION

§ 9.8.1 Substantial Completion is the stage in the progress of the Work when the Work or designated portion thereof is sufficiently complete in accordance with the Contract Documents so that the Owner can occupy or utilize the Work for its intended use.

§ 9.8.2 When the Contractor considers that the Work, or a portion thereof which the Owner agrees to accept separately, is substantially complete, the Contractor shall prepare and submit to the Architect a comprehensive list of items to be completed or corrected prior to final payment. Failure to include an item on such list does not alter the responsibility of the Contractor to complete all Work in accordance with the Contract Documents.

§ 9.8.3 Upon receipt of the Contractor's list, the Architect will make an inspection to determine whether the Work or designated portion thereof is substantially complete. If the Architect's inspection discloses any item, whether or not included on the Contractor's list, which is not sufficiently complete in accordance with the Contract Documents so that the Owner can occupy or utilize the Work or designated portion thereof for its intended use, the Contractor shall, before issuance of the Certificate of Substantial Completion, complete or correct such item upon notification by the Architect. In such case, the Contractor shall then submit a request for another inspection by the Architect to determine Substantial Completion.

AIA Document A201™ – 2007. Copyright © 1911, 1915, 1918, 1925, 1937, 1951, 1958, 1961, 1963, 1966, 1970, 1976, 1987, 1997 and 2007 by The American Institute of Architects. All rights reserved. WARNING: This AIA® Document is protected by U.S. Copyright Law and International Treaties. Unauthorized reproduction or distribution of this AIA® Document, or any portion of it, may result in severe civil and criminal penalties, and will be prosecuted to the maximum extent possible under the law. This document was produced by AIA software at 13:15:40 on 05/08/2014 under Order No.9101999414_1 which expires on 12/08/2014, and is not for resale.
User Notes:

(1919367023)

§ 9.8.4 When the Work or designated portion thereof is substantially complete, the Architect will prepare a Certificate of Substantial Completion that shall establish the date of Substantial Completion, shall establish responsibilities of the Owner and Contractor for security, maintenance, heat, utilities, damage to the Work and insurance, and shall fix the time within which the Contractor shall finish all items on the list accompanying the Certificate. Warranties required by the Contract Documents shall commence on the date of Substantial Completion of the Work or designated portion thereof unless otherwise provided in the Certificate of Substantial Completion.

§ 9.8.5 The Certificate of Substantial Completion shall be submitted to the Owner and Contractor for their written acceptance of responsibilities assigned to them in such Certificate. Upon such acceptance and consent of surety, if any, the Owner shall make payment of retainage applying to such Work or designated portion thereof. Such payment shall be adjusted for Work that is incomplete or not in accordance with the requirements of the Contract Documents.

§ 9.9 PARTIAL OCCUPANCY OR USE

§ 9.9.1 The Owner may occupy or use any completed or partially completed portion of the Work at any stage when such portion is designated by separate agreement with the Contractor, provided such occupancy or use is consented to by the insurer as required under Section 11.3.1.5 and authorized by public authorities having jurisdiction over the Project. Such partial occupancy or use may commence whether or not the portion is substantially complete, provided the Owner and Contractor have accepted in writing the responsibilities assigned to each of them for payments, retainage, if any, security, maintenance, heat, utilities, damage to the Work and insurance, and have agreed in writing concerning the period for correction of the Work and commencement of warranties required by the Contract Documents. When the Contractor considers a portion substantially complete, the Contractor shall prepare and submit a list to the Architect as provided under Section 9.8.2. Consent of the Contractor to partial occupancy or use shall not be unreasonably withheld. The stage of the progress of the Work shall be determined by written agreement between the Owner and Contractor or, if no agreement is reached, by decision of the Architect.

§ 9.9.2 Immediately prior to such partial occupancy or use, the Owner, Contractor and Architect shall jointly inspect the area to be occupied or portion of the Work to be used in order to determine and record the condition of the Work.

§ 9.9.3 Unless otherwise agreed upon, partial occupancy or use of a portion or portions of the Work shall not constitute acceptance of Work not complying with the requirements of the Contract Documents.

§ 9.10 FINAL COMPLETION AND FINAL PAYMENT

§ 9.10.1 Upon receipt of the Contractor's written notice that the Work is ready for final inspection and acceptance and upon receipt of a final Application for Payment, the Architect will promptly make such inspection and, when the Architect finds the Work acceptable under the Contract Documents and the Contract fully performed, the Architect will promptly issue a final Certificate for Payment stating that to the best of the Architect's knowledge, information and belief, and on the basis of the Architect's on-site visits and inspections, the Work has been completed in accordance with terms and conditions of the Contract Documents and that the entire balance found to be due the Contractor and noted in the final Certificate is due and payable. The Architect's final Certificate for Payment will constitute a further representation that conditions listed in Section 9.10.2 as precedent to the Contractor's being entitled to final payment have been fulfilled.

§ 9.10.2 Neither final payment nor any remaining retained percentage shall become due until the Contractor submits to the Architect (1) an affidavit that payrolls, bills for materials and equipment, and other indebtedness connected with the Work for which the Owner or the Owner's property might be responsible or encumbered (less amounts withheld by Owner) have been paid or otherwise satisfied, (2) a certificate evidencing that insurance required by the Contract Documents to remain in force after final payment is currently in effect and will not be canceled or allowed to expire until at least 30 days' prior written notice has been given to the Owner, (3) a written statement that the Contractor knows of no substantial reason that the insurance will not be renewable to cover the period required by the Contract Documents, (4) consent of surety, if any, to final payment and (5), if required by the Owner, other data establishing payment or satisfaction of obligations, such as receipts, releases and waivers of liens, claims, security interests or encumbrances arising out of the Contract, to the extent and in such form as may be designated by the Owner. If a Subcontractor refuses to furnish a release or waiver required by the Owner, the Contractor may furnish a bond satisfactory to the Owner to indemnify the Owner against such lien. If such lien remains unsatisfied after payments are made, the Contractor shall refund to the Owner all money that the Owner may be compelled to pay in discharging such lien, including all costs and reasonable attorneys' fees.

AIA Document A201™ – 2007. Copyright © 1911, 1915, 1918, 1925, 1937, 1951, 1958, 1961, 1963, 1966, 1970, 1976, 1987, 1997 and 2007 by The American Institute of Architects. All rights reserved. WARNING: This AIA® Document is protected by U.S. Copyright Law and International Treaties. Unauthorized reproduction or distribution of this AIA® Document, or any portion of it, may result in severe civil and criminal penalties, and will be prosecuted to the maximum extent possible under the law. This document was produced by AIA software at 13:15:40 on 05/08/2014 under Order No.9101999414_1 which expires on 12/08/2014, and is not for resale.
User Notes:

(1919367023)

§ 9.10.3 If, after Substantial Completion of the Work, final completion thereof is materially delayed through no fault of the Contractor or by issuance of Change Orders affecting final completion, and the Architect so confirms, the Owner shall, upon application by the Contractor and certification by the Architect, and without terminating the Contract, make payment of the balance due for that portion of the Work fully completed and accepted. If the remaining balance for Work not fully completed or corrected is less than retainage stipulated in the Contract Documents, and if bonds have been furnished, the written consent of surety to payment of the balance due for that portion of the Work fully completed and accepted shall be submitted by the Contractor to the Architect prior to certification of such payment. Such payment shall be made under terms and conditions governing final payment, except that it shall not constitute a waiver of claims.

§ 9.10.4 The making of final payment shall constitute a waiver of Claims by the Owner except those arising from

- .1 liens, Claims, security interests or encumbrances arising out of the Contract and unsettled;
- .2 failure of the Work to comply with the requirements of the Contract Documents; or
- .3 terms of special warranties required by the Contract Documents.

§ 9.10.5 Acceptance of final payment by the Contractor, a Subcontractor or material supplier shall constitute a waiver of claims by that payee except those previously made in writing and identified by that payee as unsettled at the time of final Application for Payment.

ARTICLE 10 PROTECTION OF PERSONS AND PROPERTY

§ 10.1 SAFETY PRECAUTIONS AND PROGRAMS

The Contractor shall be responsible for initiating, maintaining and supervising all safety precautions and programs in connection with the performance of the Contract.

§ 10.2 SAFETY OF PERSONS AND PROPERTY

§ 10.2.1 The Contractor shall take reasonable precautions for safety of, and shall provide reasonable protection to prevent damage, injury or loss to

- .1 employees on the Work and other persons who may be affected thereby;
- .2 the Work and materials and equipment to be incorporated therein, whether in storage on or off the site, under care, custody or control of the Contractor or the Contractor's Subcontractors or Sub-subcontractors; and
- .3 other property at the site or adjacent thereto, such as trees, shrubs, lawns, walks, pavements, roadways, structures and utilities not designated for removal, relocation or replacement in the course of construction.

§ 10.2.2 The Contractor shall comply with and give notices required by applicable laws, statutes, ordinances, codes, rules and regulations, and lawful orders of public authorities bearing on safety of persons or property or their protection from damage, injury or loss.

§ 10.2.3 The Contractor shall erect and maintain, as required by existing conditions and performance of the Contract, reasonable safeguards for safety and protection, including posting danger signs and other warnings against hazards, promulgating safety regulations and notifying owners and users of adjacent sites and utilities.

§ 10.2.4 When use or storage of explosives or other hazardous materials or equipment or unusual methods are necessary for execution of the Work, the Contractor shall exercise utmost care and carry on such activities under supervision of properly qualified personnel.

§ 10.2.5 The Contractor shall promptly remedy damage and loss (other than damage or loss insured under property insurance required by the Contract Documents) to property referred to in Sections 10.2.1.2 and 10.2.1.3 caused in whole or in part by the Contractor, a Subcontractor, a Sub-subcontractor, or anyone directly or indirectly employed by any of them, or by anyone for whose acts they may be liable and for which the Contractor is responsible under Sections 10.2.1.2 and 10.2.1.3, except damage or loss attributable to acts or omissions of the Owner or Architect or anyone directly or indirectly employed by either of them, or by anyone for whose acts either of them may be liable, and not attributable to the fault or negligence of the Contractor. The foregoing obligations of the Contractor are in addition to the Contractor's obligations under Section 3.18.

AIA Document A201™ – 2007. Copyright © 1911, 1915, 1918, 1925, 1937, 1951, 1958, 1961, 1963, 1966, 1970, 1976, 1987, 1997 and 2007 by The American Institute of Architects. All rights reserved. WARNING: This AIA® Document is protected by U.S. Copyright Law and International Treaties. Unauthorized reproduction or distribution of this AIA® Document, or any portion of it, may result in severe civil and criminal penalties, and will be prosecuted to the maximum extent possible under the law. This document was produced by AIA software at 13:15:40 on 05/08/2014 under Order No.9101999414_1 which expires on 12/08/2014, and is not for resale.
User Notes:

(1919367023)

§ 10.2.6 The Contractor shall designate a responsible member of the Contractor's organization at the site whose duty shall be the prevention of accidents. This person shall be the Contractor's superintendent unless otherwise designated by the Contractor in writing to the Owner and Architect.

§ 10.2.7 The Contractor shall not permit any part of the construction or site to be loaded so as to cause damage or create an unsafe condition.

§ 10.2.8 INJURY OR DAMAGE TO PERSON OR PROPERTY

If either party suffers injury or damage to person or property because of an act or omission of the other party, or of others for whose acts such party is legally responsible, written notice of such injury or damage, whether or not insured, shall be given to the other party within a reasonable time not exceeding 21 days after discovery. The notice shall provide sufficient detail to enable the other party to investigate the matter.

§ 10.3 HAZARDOUS MATERIALS

§ 10.3.1 The Contractor is responsible for compliance with any requirements included in the Contract Documents regarding hazardous materials. If the Contractor encounters a hazardous material or substance not addressed in the Contract Documents and if reasonable precautions will be inadequate to prevent foreseeable bodily injury or death to persons resulting from a material or substance, including but not limited to asbestos or polychlorinated biphenyl (PCB), encountered on the site by the Contractor, the Contractor shall, upon recognizing the condition, immediately stop Work in the affected area and report the condition to the Owner and Architect in writing.

§ 10.3.2 Upon receipt of the Contractor's written notice, the Owner shall obtain the services of a licensed laboratory to verify the presence or absence of the material or substance reported by the Contractor and, in the event such material or substance is found to be present, to cause it to be rendered harmless. Unless otherwise required by the Contract Documents, the Owner shall furnish in writing to the Contractor and Architect the names and qualifications of persons or entities who are to perform tests verifying the presence or absence of such material or substance or who are to perform the task of removal or safe containment of such material or substance. The Contractor and the Architect will promptly reply to the Owner in writing stating whether or not either has reasonable objection to the persons or entities proposed by the Owner. If either the Contractor or Architect has an objection to a person or entity proposed by the Owner, the Owner shall propose another to whom the Contractor and the Architect have no reasonable objection. When the material or substance has been rendered harmless, Work in the affected area shall resume upon written agreement of the Owner and Contractor. By Change Order, the Contract Time shall be extended appropriately and the Contract Sum shall be increased in the amount of the Contractor's reasonable additional costs of shut-down, delay and start-up.

§ 10.3.3 To the fullest extent permitted by law, the Owner shall indemnify and hold harmless the Contractor, Subcontractors, Architect, Architect's consultants and agents and employees of any of them from and against claims, damages, losses and expenses, including but not limited to attorneys' fees, arising out of or resulting from performance of the Work in the affected area if in fact the material or substance presents the risk of bodily injury or death as described in Section 10.3.1 and has not been rendered harmless, provided that such claim, damage, loss or expense is attributable to bodily injury, sickness, disease or death, or to injury to or destruction of tangible property (other than the Work itself), except to the extent that such damage, loss or expense is due to the fault or negligence of the party seeking indemnity.

§ 10.3.4 The Owner shall not be responsible under this Section 10.3 for materials or substances the Contractor brings to the site unless such materials or substances are required by the Contract Documents. The Owner shall be responsible for materials or substances required by the Contract Documents, except to the extent of the Contractor's fault or negligence in the use and handling of such materials or substances.

§ 10.3.5 The Contractor shall indemnify the Owner for the cost and expense the Owner incurs (1) for remediation of a material or substance the Contractor brings to the site and negligently handles, or (2) where the Contractor fails to perform its obligations under Section 10.3.1, except to the extent that the cost and expense are due to the Owner's fault or negligence.

§ 10.3.6 If, without negligence on the part of the Contractor, the Contractor is held liable by a government agency for the cost of remediation of a hazardous material or substance solely by reason of performing Work as required by the Contract Documents, the Owner shall indemnify the Contractor for all cost and expense thereby incurred.

Init.
/
AIA Document A201™ – 2007. Copyright © 1911, 1915, 1918, 1925, 1937, 1951, 1958, 1961, 1963, 1966, 1970, 1976, 1987, 1997 and 2007 by The American Institute of Architects. All rights reserved. WARNING: This AIA® Document is protected by U.S. Copyright Law and International Treaties. Unauthorized reproduction or distribution of this AIA® Document, or any portion of it, may result in severe civil and criminal penalties, and will be prosecuted to the maximum extent possible under the law. This document was produced by AIA software at 13:15:40 on 05/08/2014 under Order No.9101999414_1 which expires on 12/08/2014, and is not for resale.
User Notes:
(1919367023)

§ 10.4 EMERGENCIES

In an emergency affecting safety of persons or property, the Contractor shall act, at the Contractor's discretion, to prevent threatened damage, injury or loss. Additional compensation or extension of time claimed by the Contractor on account of an emergency shall be determined as provided in Article 15 and Article 7.

ARTICLE 11 INSURANCE AND BONDS

§ 11.1 CONTRACTOR'S LIABILITY INSURANCE

§ 11.1.1 The Contractor shall purchase from and maintain in a company or companies lawfully authorized to do business in the jurisdiction in which the Project is located such insurance as will protect the Contractor from claims set forth below which may arise out of or result from the Contractor's operations and completed operations under the Contract and for which the Contractor may be legally liable, whether such operations be by the Contractor or by a Subcontractor or by anyone directly or indirectly employed by any of them, or by anyone for whose acts any of them may be liable:

- .1 Claims under workers' compensation, disability benefit and other similar employee benefit acts that are applicable to the Work to be performed;
- .2 Claims for damages because of bodily injury, occupational sickness or disease, or death of the Contractor's employees;
- .3 Claims for damages because of bodily injury, sickness or disease, or death of any person other than the Contractor's employees;
- .4 Claims for damages insured by usual personal injury liability coverage;
- .5 Claims for damages, other than to the Work itself, because of injury to or destruction of tangible property, including loss of use resulting therefrom;
- .6 Claims for damages because of bodily injury, death of a person or property damage arising out of ownership, maintenance or use of a motor vehicle;
- .7 Claims for bodily injury or property damage arising out of completed operations; and
- .8 Claims involving contractual liability insurance applicable to the Contractor's obligations under Section 3.18.

§ 11.1.2 The insurance required by Section 11.1.1 shall be written for not less than limits of liability specified in the Contract Documents or required by law, whichever coverage is greater. Coverages, whether written on an occurrence or claims-made basis, shall be maintained without interruption from the date of commencement of the Work until the date of final payment and termination of any coverage required to be maintained after final payment, and, with respect to the Contractor's completed operations coverage, until the expiration of the period for correction of Work or for such other period for maintenance of completed operations coverage as specified in the Contract Documents.

§ 11.1.3 Certificates of insurance acceptable to the Owner shall be filed with the Owner prior to commencement of the Work and thereafter upon renewal or replacement of each required policy of insurance. These certificates and the insurance policies required by this Section 11.1 shall contain a provision that coverages afforded under the policies will not be canceled or allowed to expire until at least 30 days' prior written notice has been given to the Owner. An additional certificate evidencing continuation of liability coverage, including coverage for completed operations, shall be submitted with the final Application for Payment as required by Section 9.10.2 and thereafter upon renewal or replacement of such coverage until the expiration of the time required by Section 11.1.2. Information concerning reduction of coverage on account of revised limits or claims paid under the General Aggregate, or both, shall be furnished by the Contractor with reasonable promptness.

§ 11.1.4 The Contractor shall cause the commercial liability coverage required by the Contract Documents to include (1) the Owner, the Architect and the Architect's consultants as additional insureds for claims caused in whole or in part by the Contractor's negligent acts or omissions during the Contractor's operations; and (2) the Owner as an additional insured for claims caused in whole or in part by the Contractor's negligent acts or omissions during the Contractor's completed operations.

§ 11.2 OWNER'S LIABILITY INSURANCE

The Owner shall be responsible for purchasing and maintaining the Owner's usual liability insurance.

AIA Document A201™ – 2007. Copyright © 1911, 1915, 1918, 1925, 1937, 1951, 1958, 1961, 1963, 1966, 1970, 1976, 1987, 1997 and 2007 by The American Institute of Architects. **All rights reserved. WARNING: This AIA® Document is protected by U.S. Copyright Law and International Treaties. Unauthorized reproduction or distribution of this AIA® Document, or any portion of it, may result in severe civil and criminal penalties, and will be prosecuted to the maximum extent possible under the law.** This document was produced by AIA software at 13:15:40 on 05/08/2014 under Order No.9101999414_1 which expires on 12/08/2014, and is not for resale.
User Notes:

(1919367023)

§ 11.3 PROPERTY INSURANCE

§ 11.3.1 Unless otherwise provided, the Owner shall purchase and maintain, in a company or companies lawfully authorized to do business in the jurisdiction in which the Project is located, property insurance written on a builder's risk "all-risk" or equivalent policy form in the amount of the initial Contract Sum, plus value of subsequent Contract Modifications and cost of materials supplied or installed by others, comprising total value for the entire Project at the site on a replacement cost basis without optional deductibles. Such property insurance shall be maintained, unless otherwise provided in the Contract Documents or otherwise agreed in writing by all persons and entities who are beneficiaries of such insurance, until final payment has been made as provided in Section 9.10 or until no person or entity other than the Owner has an insurable interest in the property required by this Section 11.3 to be covered, whichever is later. This insurance shall include interests of the Owner, the Contractor, Subcontractors and Sub-subcontractors in the Project.

§ 11.3.1.1 Property insurance shall be on an "all-risk" or equivalent policy form and shall include, without limitation, insurance against the perils of fire (with extended coverage) and physical loss or damage including, without duplication of coverage, theft, vandalism, malicious mischief, collapse, earthquake, flood, windstorm, falsework, testing and startup, temporary buildings and debris removal including demolition occasioned by enforcement of any applicable legal requirements, and shall cover reasonable compensation for Architect's and Contractor's services and expenses required as a result of such insured loss.

§ 11.3.1.2 If the Owner does not intend to purchase such property insurance required by the Contract and with all of the coverages in the amount described above, the Owner shall so inform the Contractor in writing prior to commencement of the Work. The Contractor may then effect insurance that will protect the interests of the Contractor, Subcontractors and Sub-subcontractors in the Work, and by appropriate Change Order the cost thereof shall be charged to the Owner. If the Contractor is damaged by the failure or neglect of the Owner to purchase or maintain insurance as described above, without so notifying the Contractor in writing, then the Owner shall bear all reasonable costs properly attributable thereto.

§ 11.3.1.3 If the property insurance requires deductibles, the Owner shall pay costs not covered because of such deductibles.

§ 11.3.1.4 This property insurance shall cover portions of the Work stored off the site, and also portions of the Work in transit.

§ 11.3.1.5 Partial occupancy or use in accordance with Section 9.9 shall not commence until the insurance company or companies providing property insurance have consented to such partial occupancy or use by endorsement or otherwise. The Owner and the Contractor shall take reasonable steps to obtain consent of the insurance company or companies and shall, without mutual written consent, take no action with respect to partial occupancy or use that would cause cancellation, lapse or reduction of insurance.

§ 11.3.2 BOILER AND MACHINERY INSURANCE

The Owner shall purchase and maintain boiler and machinery insurance required by the Contract Documents or by law, which shall specifically cover such insured objects during installation and until final acceptance by the Owner; this insurance shall include interests of the Owner, Contractor, Subcontractors and Sub-subcontractors in the Work, and the Owner and Contractor shall be named insureds.

§ 11.3.3 LOSS OF USE INSURANCE

The Owner, at the Owner's option, may purchase and maintain such insurance as will insure the Owner against loss of use of the Owner's property due to fire or other hazards, however caused. The Owner waives all rights of action against the Contractor for loss of use of the Owner's property, including consequential losses due to fire or other hazards however caused.

§ 11.3.4 If the Contractor requests in writing that insurance for risks other than those described herein or other special causes of loss be included in the property insurance policy, the Owner shall, if possible, include such insurance, and the cost thereof shall be charged to the Contractor by appropriate Change Order.

§ 11.3.5 If during the Project construction period the Owner insures properties, real or personal or both, at or adjacent to the site by property insurance under policies separate from those insuring the Project, or if after final payment

AIA Document A201™ – 2007. Copyright © 1911, 1915, 1918, 1925, 1937, 1951, 1958, 1961, 1963, 1966, 1970, 1976, 1987, 1997 and 2007 by The American Institute of Architects. **All rights reserved. WARNING: This AIA® Document is protected by U.S. Copyright Law and International Treaties. Unauthorized reproduction or distribution of this AIA® Document, or any portion of it, may result in severe civil and criminal penalties, and will be prosecuted to the maximum extent possible under the law.** This document was produced by AIA software at 13:15:40 on 05/08/2014 under Order No.9101999414_1 which expires on 12/08/2014, and is not for resale.
User Notes:

(1919367023)

property insurance is to be provided on the completed Project through a policy or policies other than those insuring the Project during the construction period, the Owner shall waive all rights in accordance with the terms of Section 11.3.7 for damages caused by fire or other causes of loss covered by this separate property insurance. All separate policies shall provide this waiver of subrogation by endorsement or otherwise.

§ 11.3.6 Before an exposure to loss may occur, the Owner shall file with the Contractor a copy of each policy that includes insurance coverages required by this Section 11.3. Each policy shall contain all generally applicable conditions, definitions, exclusions and endorsements related to this Project. Each policy shall contain a provision that the policy will not be canceled or allowed to expire, and that its limits will not be reduced, until at least 30 days' prior written notice has been given to the Contractor.

§ 11.3.7 WAIVERS OF SUBROGATION

The Owner and Contractor waive all rights against (1) each other and any of their subcontractors, sub-subcontractors, agents and employees, each of the other, and (2) the Architect, Architect's consultants, separate contractors described in Article 6, if any, and any of their subcontractors, sub-subcontractors, agents and employees, for damages caused by fire or other causes of loss to the extent covered by property insurance obtained pursuant to this Section 11.3 or other property insurance applicable to the Work, except such rights as they have to proceeds of such insurance held by the Owner as fiduciary. The Owner or Contractor, as appropriate, shall require of the Architect, Architect's consultants, separate contractors described in Article 6, if any, and the subcontractors, sub-subcontractors, agents and employees of any of them, by appropriate agreements, written where legally required for validity, similar waivers each in favor of other parties enumerated herein. The policies shall provide such waivers of subrogation by endorsement or otherwise. A waiver of subrogation shall be effective as to a person or entity even though that person or entity would otherwise have a duty of indemnification, contractual or otherwise, did not pay the insurance premium directly or indirectly, and whether or not the person or entity had an insurable interest in the property damaged.

§ 11.3.8 A loss insured under the Owner's property insurance shall be adjusted by the Owner as fiduciary and made payable to the Owner as fiduciary for the insureds, as their interests may appear, subject to requirements of any applicable mortgagee clause and of Section 11.3.10. The Contractor shall pay Subcontractors their just shares of insurance proceeds received by the Contractor, and by appropriate agreements, written where legally required for validity, shall require Subcontractors to make payments to their Sub-subcontractors in similar manner.

§ 11.3.9 If required in writing by a party in interest, the Owner as fiduciary shall, upon occurrence of an insured loss, give bond for proper performance of the Owner's duties. The cost of required bonds shall be charged against proceeds received as fiduciary. The Owner shall deposit in a separate account proceeds so received, which the Owner shall distribute in accordance with such agreement as the parties in interest may reach, or as determined in accordance with the method of binding dispute resolution selected in the Agreement between the Owner and Contractor. If after such loss no other special agreement is made and unless the Owner terminates the Contract for convenience, replacement of damaged property shall be performed by the Contractor after notification of a Change in the Work in accordance with Article 7.

§ 11.3.10 The Owner as fiduciary shall have power to adjust and settle a loss with insurers unless one of the parties in interest shall object in writing within five days after occurrence of loss to the Owner's exercise of this power; if such objection is made, the dispute shall be resolved in the manner selected by the Owner and Contractor as the method of binding dispute resolution in the Agreement. If the Owner and Contractor have selected arbitration as the method of binding dispute resolution, the Owner as fiduciary shall make settlement with insurers or, in the case of a dispute over distribution of insurance proceeds, in accordance with the directions of the arbitrators.

§ 11.4 PERFORMANCE BOND AND PAYMENT BOND

§ 11.4.1 The Owner shall have the right to require the Contractor to furnish bonds covering faithful performance of the Contract and payment of obligations arising thereunder as stipulated in bidding requirements or specifically required in the Contract Documents on the date of execution of the Contract.

§ 11.4.2 Upon the request of any person or entity appearing to be a potential beneficiary of bonds covering payment of obligations arising under the Contract, the Contractor shall promptly furnish a copy of the bonds or shall authorize a copy to be furnished.

AIA Document A201™ – 2007. Copyright © 1911, 1915, 1918, 1925, 1937, 1951, 1958, 1961, 1963, 1966, 1970, 1976, 1987, 1997 and 2007 by The American Institute of Architects. All rights reserved. WARNING: This AIA® Document is protected by U.S. Copyright Law and International Treaties. Unauthorized reproduction or distribution of this AIA® Document, or any portion of it, may result in severe civil and criminal penalties, and will be prosecuted to the maximum extent possible under the law. This document was produced by AIA software at 13:15:40 on 05/08/2014 under Order No.9101999414_1 which expires on 12/08/2014, and is not for resale.
User Notes:

(1919367023)

ARTICLE 12 UNCOVERING AND CORRECTION OF WORK

§ 12.1 UNCOVERING OF WORK

§ 12.1.1 If a portion of the Work is covered contrary to the Architect's request or to requirements specifically expressed in the Contract Documents, it must, if requested in writing by the Architect, be uncovered for the Architect's examination and be replaced at the Contractor's expense without change in the Contract Time.

§ 12.1.2 If a portion of the Work has been covered that the Architect has not specifically requested to examine prior to its being covered, the Architect may request to see such Work and it shall be uncovered by the Contractor. If such Work is in accordance with the Contract Documents, costs of uncovering and replacement shall, by appropriate Change Order, be at the Owner's expense. If such Work is not in accordance with the Contract Documents, such costs and the cost of correction shall be at the Contractor's expense unless the condition was caused by the Owner or a separate contractor in which event the Owner shall be responsible for payment of such costs.

§ 12.2 CORRECTION OF WORK

§ 12.2.1 BEFORE OR AFTER SUBSTANTIAL COMPLETION

The Contractor shall promptly correct Work rejected by the Architect or failing to conform to the requirements of the Contract Documents, whether discovered before or after Substantial Completion and whether or not fabricated, installed or completed. Costs of correcting such rejected Work, including additional testing and inspections, the cost of uncovering and replacement, and compensation for the Architect's services and expenses made necessary thereby, shall be at the Contractor's expense.

§ 12.2.2 AFTER SUBSTANTIAL COMPLETION

§ 12.2.2.1 In addition to the Contractor's obligations under Section 3.5, if, within one year after the date of Substantial Completion of the Work or designated portion thereof or after the date for commencement of warranties established under Section 9.9.1, or by terms of an applicable special warranty required by the Contract Documents, any of the Work is found to be not in accordance with the requirements of the Contract Documents, the Contractor shall correct it promptly after receipt of written notice from the Owner to do so unless the Owner has previously given the Contractor a written acceptance of such condition. The Owner shall give such notice promptly after discovery of the condition. During the one-year period for correction of Work, if the Owner fails to notify the Contractor and give the Contractor an opportunity to make the correction, the Owner waives the rights to require correction by the Contractor and to make a claim for breach of warranty. If the Contractor fails to correct nonconforming Work within a reasonable time during that period after receipt of notice from the Owner or Architect, the Owner may correct it in accordance with Section 2.4.

§ 12.2.2.2 The one-year period for correction of Work shall be extended with respect to portions of Work first performed after Substantial Completion by the period of time between Substantial Completion and the actual completion of that portion of the Work.

§ 12.2.2.3 The one-year period for correction of Work shall not be extended by corrective Work performed by the Contractor pursuant to this Section 12.2.

§ 12.2.3 The Contractor shall remove from the site portions of the Work that are not in accordance with the requirements of the Contract Documents and are neither corrected by the Contractor nor accepted by the Owner.

§ 12.2.4 The Contractor shall bear the cost of correcting destroyed or damaged construction, whether completed or partially completed, of the Owner or separate contractors caused by the Contractor's correction or removal of Work that is not in accordance with the requirements of the Contract Documents.

§ 12.2.5 Nothing contained in this Section 12.2 shall be construed to establish a period of limitation with respect to other obligations the Contractor has under the Contract Documents. Establishment of the one-year period for correction of Work as described in Section 12.2.2 relates only to the specific obligation of the Contractor to correct the Work, and has no relationship to the time within which the obligation to comply with the Contract Documents may be sought to be enforced, nor to the time within which proceedings may be commenced to establish the Contractor's liability with respect to the Contractor's obligations other than specifically to correct the Work.

AIA Document A201™ – 2007. Copyright © 1911, 1915, 1918, 1925, 1937, 1951, 1958, 1961, 1963, 1966, 1970, 1976, 1987, 1997 and 2007 by The American Institute of Architects. **All rights reserved. WARNING: This AIA® Document is protected by U.S. Copyright Law and International Treaties. Unauthorized reproduction or distribution of this AIA® Document, or any portion of it, may result in severe civil and criminal penalties, and will be prosecuted to the maximum extent possible under the law.** This document was produced by AIA software at 13:15:40 on 05/08/2014 under Order No.9101999414_1 which expires on 12/08/2014, and is not for resale.
User Notes:

(1919367023)

§ 12.3 ACCEPTANCE OF NONCONFORMING WORK

If the Owner prefers to accept Work that is not in accordance with the requirements of the Contract Documents, the Owner may do so instead of requiring its removal and correction, in which case the Contract Sum will be reduced as appropriate and equitable. Such adjustment shall be effected whether or not final payment has been made.

ARTICLE 13 MISCELLANEOUS PROVISIONS

§ 13.1 GOVERNING LAW

The Contract shall be governed by the law of the place where the Project is located except that, if the parties have selected arbitration as the method of binding dispute resolution, the Federal Arbitration Act shall govern Section 15.4.

§ 13.2 SUCCESSORS AND ASSIGNS

§ 13.2.1 The Owner and Contractor respectively bind themselves, their partners, successors, assigns and legal representatives to covenants, agreements and obligations contained in the Contract Documents. Except as provided in Section 13.2.2, neither party to the Contract shall assign the Contract as a whole without written consent of the other. If either party attempts to make such an assignment without such consent, that party shall nevertheless remain legally responsible for all obligations under the Contract.

§ 13.2.2 The Owner may, without consent of the Contractor, assign the Contract to a lender providing construction financing for the Project, if the lender assumes the Owner's rights and obligations under the Contract Documents. The Contractor shall execute all consents reasonably required to facilitate such assignment.

§ 13.3 WRITTEN NOTICE

Written notice shall be deemed to have been duly served if delivered in person to the individual, to a member of the firm or entity, or to an officer of the corporation for which it was intended; or if delivered at, or sent by registered or certified mail or by courier service providing proof of delivery to, the last business address known to the party giving notice.

§ 13.4 RIGHTS AND REMEDIES

§ 13.4.1 Duties and obligations imposed by the Contract Documents and rights and remedies available thereunder shall be in addition to and not a limitation of duties, obligations, rights and remedies otherwise imposed or available by law.

§ 13.4.2 No action or failure to act by the Owner, Architect or Contractor shall constitute a waiver of a right or duty afforded them under the Contract, nor shall such action or failure to act constitute approval of or acquiescence in a breach there under, except as may be specifically agreed in writing.

§ 13.5 TESTS AND INSPECTIONS

§ 13.5.1 Tests, inspections and approvals of portions of the Work shall be made as required by the Contract Documents and by applicable laws, statutes, ordinances, codes, rules and regulations or lawful orders of public authorities. Unless otherwise provided, the Contractor shall make arrangements for such tests, inspections and approvals with an independent testing laboratory or entity acceptable to the Owner, or with the appropriate public authority, and shall bear all related costs of tests, inspections and approvals. The Contractor shall give the Architect timely notice of when and where tests and inspections are to be made so that the Architect may be present for such procedures. The Owner shall bear costs of (1) tests, inspections or approvals that do not become requirements until after bids are received or negotiations concluded, and (2) tests, inspections or approvals where building codes or applicable laws or regulations prohibit the Owner from delegating their cost to the Contractor.

§ 13.5.2 If the Architect, Owner or public authorities having jurisdiction determine that portions of the Work require additional testing, inspection or approval not included under Section 13.5.1, the Architect will, upon written authorization from the Owner, instruct the Contractor to make arrangements for such additional testing, inspection or approval by an entity acceptable to the Owner, and the Contractor shall give timely notice to the Architect of when and where tests and inspections are to be made so that the Architect may be present for such procedures. Such costs, except as provided in Section 13.5.3, shall be at the Owner's expense.

§ 13.5.3 If such procedures for testing, inspection or approval under Sections 13.5.1 and 13.5.2 reveal failure of the portions of the Work to comply with requirements established by the Contract Documents, all costs made necessary by

AIA Document A201™ – 2007. Copyright © 1911, 1915, 1918, 1925, 1937, 1951, 1958, 1961, 1963, 1966, 1970, 1976, 1987, 1997 and 2007 by The American Institute of Architects. All rights reserved. WARNING: This AIA® Document is protected by U.S. Copyright Law and International Treaties. Unauthorized reproduction or distribution of this AIA® Document, or any portion of it, may result in severe civil and criminal penalties, and will be prosecuted to the maximum extent possible under the law. This document was produced by AIA software at 13:15:40 on 05/08/2014 under Order No.9101999414_1 which expires on 12/08/2014, and is not for resale.
User Notes:

(1919367023)

such failure including those of repeated procedures and compensation for the Architect's services and expenses shall be at the Contractor's expense.

§ 13.5.4 Required certificates of testing, inspection or approval shall, unless otherwise required by the Contract Documents, be secured by the Contractor and promptly delivered to the Architect.

§ 13.5.5 If the Architect is to observe tests, inspections or approvals required by the Contract Documents, the Architect will do so promptly and, where practicable, at the normal place of testing.

§ 13.5.6 Tests or inspections conducted pursuant to the Contract Documents shall be made promptly to avoid unreasonable delay in the Work.

§ 13.6 INTEREST

Payments due and unpaid under the Contract Documents shall bear interest from the date payment is due at such rate as the parties may agree upon in writing or, in the absence thereof, at the legal rate prevailing from time to time at the place where the Project is located.

§ 13.7 TIME LIMITS ON CLAIMS

The Owner and Contractor shall commence all claims and causes of action, whether in contract, tort, breach of warranty or otherwise, against the other arising out of or related to the Contract in accordance with the requirements of the final dispute resolution method selected in the Agreement within the time period specified by applicable law, but in any case not more than 10 years after the date of Substantial Completion of the Work. The Owner and Contractor waive all claims and causes of action not commenced in accordance with this Section 13.7.

ARTICLE 14 TERMINATION OR SUSPENSION OF THE CONTRACT

§ 14.1 TERMINATION BY THE CONTRACTOR

§ 14.1.1 The Contractor may terminate the Contract if the Work is stopped for a period of 30 consecutive days through no act or fault of the Contractor or a Subcontractor, Sub-subcontractor or their agents or employees or any other persons or entities performing portions of the Work under direct or indirect contract with the Contractor, for any of the following reasons:

- **.1** Issuance of an order of a court or other public authority having jurisdiction that requires all Work to be stopped;
- **.2** An act of government, such as a declaration of national emergency that requires all Work to be stopped;
- **.3** Because the Architect has not issued a Certificate for Payment and has not notified the Contractor of the reason for withholding certification as provided in Section 9.4.1, or because the Owner has not made payment on a Certificate for Payment within the time stated in the Contract Documents; or
- **.4** The Owner has failed to furnish to the Contractor promptly, upon the Contractor's request, reasonable evidence as required by Section 2.2.1.

§ 14.1.2 The Contractor may terminate the Contract if, through no act or fault of the Contractor or a Subcontractor, Sub-subcontractor or their agents or employees or any other persons or entities performing portions of the Work under direct or indirect contract with the Contractor, repeated suspensions, delays or interruptions of the entire Work by the Owner as described in Section 14.3 constitute in the aggregate more than 100 percent of the total number of days scheduled for completion, or 120 days in any 365-day period, whichever is less.

§ 14.1.3 If one of the reasons described in Section 14.1.1 or 14.1.2 exists, the Contractor may, upon seven days' written notice to the Owner and Architect, terminate the Contract and recover from the Owner payment for Work executed, including reasonable overhead and profit, costs incurred by reason of such termination, and damages.

§ 14.1.4 If the Work is stopped for a period of 60 consecutive days through no act or fault of the Contractor or a Subcontractor or their agents or employees or any other persons performing portions of the Work under contract with the Contractor because the Owner has repeatedly failed to fulfill the Owner's obligations under the Contract Documents with respect to matters important to the progress of the Work, the Contractor may, upon seven additional days' written notice to the Owner and the Architect, terminate the Contract and recover from the Owner as provided in Section 14.1.3.

Init.
/
AIA Document A201™ – 2007. Copyright © 1911, 1915, 1918, 1925, 1937, 1951, 1958, 1961, 1963, 1966, 1970, 1976, 1987, 1997 and 2007 by The American Institute of Architects. **All rights reserved. WARNING: This AIA® Document is protected by U.S. Copyright Law and International Treaties. Unauthorized reproduction or distribution of this AIA® Document, or any portion of it, may result in severe civil and criminal penalties, and will be prosecuted to the maximum extent possible under the law.** This document was produced by AIA software at 13:15:40 on 05/08/2014 under Order No.9101999414_1 which expires on 12/08/2014, and is not for resale.
User Notes:
(1919367023)

§ 14.2 TERMINATION BY THE OWNER FOR CAUSE

§ 14.2.1 The Owner may terminate the Contract if the Contractor

.1 repeatedly refuses or fails to supply enough properly skilled workers or proper materials;

.2 fails to make payment to Subcontractors for materials or labor in accordance with the respective agreements between the Contractor and the Subcontractors;

.3 repeatedly disregards applicable laws, statutes, ordinances, codes, rules and regulations, or lawful orders of a public authority; or

.4 otherwise is guilty of substantial breach of a provision of the Contract Documents.

§ 14.2.2 When any of the above reasons exist, the Owner, upon certification by the Initial Decision Maker that sufficient cause exists to justify such action, may without prejudice to any other rights or remedies of the Owner and after giving the Contractor and the Contractor's surety, if any, seven days' written notice, terminate employment of the Contractor and may, subject to any prior rights of the surety:

.1 Exclude the Contractor from the site and take possession of all materials, equipment, tools, and construction equipment and machinery thereon owned by the Contractor;

.2 Accept assignment of subcontracts pursuant to Section 5.4; and

.3 Finish the Work by whatever reasonable method the Owner may deem expedient. Upon written request of the Contractor, the Owner shall furnish to the Contractor a detailed accounting of the costs incurred by the Owner in finishing the Work.

§ 14.2.3 When the Owner terminates the Contract for one of the reasons stated in Section 14.2.1, the Contractor shall not be entitled to receive further payment until the Work is finished.

§ 14.2.4 If the unpaid balance of the Contract Sum exceeds costs of finishing the Work, including compensation for the Architect's services and expenses made necessary thereby, and other damages incurred by the Owner and not expressly waived, such excess shall be paid to the Contractor. If such costs and damages exceed the unpaid balance, the Contractor shall pay the difference to the Owner. The amount to be paid to the Contractor or Owner, as the case may be, shall be certified by the Initial Decision Maker, upon application, and this obligation for payment shall survive termination of the Contract.

§ 14.3 SUSPENSION BY THE OWNER FOR CONVENIENCE

§ 14.3.1 The Owner may, without cause, order the Contractor in writing to suspend, delay or interrupt the Work in whole or in part for such period of time as the Owner may determine.

§ 14.3.2 The Contract Sum and Contract Time shall be adjusted for increases in the cost and time caused by suspension, delay or interruption as described in Section 14.3.1. Adjustment of the Contract Sum shall include profit. No adjustment shall be made to the extent

.1 that performance is, was or would have been so suspended, delayed or interrupted by another cause for which the Contractor is responsible; or

.2 that an equitable adjustment is made or denied under another provision of the Contract.

§ 14.4 TERMINATION BY THE OWNER FOR CONVENIENCE

§ 14.4.1 The Owner may, at any time, terminate the Contract for the Owner's convenience and without cause.

§ 14.4.2 Upon receipt of written notice from the Owner of such termination for the Owner's convenience, the Contractor shall

.1 cease operations as directed by the Owner in the notice;

.2 take actions necessary, or that the Owner may direct, for the protection and preservation of the Work; and

.3 except for Work directed to be performed prior to the effective date of termination stated in the notice, terminate all existing subcontracts and purchase orders and enter into no further subcontracts and purchase orders.

§ 14.4.3 In case of such termination for the Owner's convenience, the Contractor shall be entitled to receive payment for Work executed, and costs incurred by reason of such termination, along with reasonable overhead and profit on the Work not executed.

AIA Document A201™ – 2007. Copyright © 1911, 1915, 1918, 1925, 1937, 1951, 1958, 1961, 1963, 1966, 1970, 1976, 1987, 1997 and 2007 by The American Institute of Architects. **All rights reserved. WARNING: This AIA® Document is protected by U.S. Copyright Law and International Treaties. Unauthorized reproduction or distribution of this AIA® Document, or any portion of it, may result in severe civil and criminal penalties, and will be prosecuted to the maximum extent possible under the law.** This document was produced by AIA software at 13:15:40 on 05/08/2014 under Order No.9101999414_1 which expires on 12/08/2014, and is not for resale.
User Notes:

(1919367023)

ARTICLE 15 CLAIMS AND DISPUTES

§ 15.1 CLAIMS

§ 15.1.1 DEFINITION

A Claim is a demand or assertion by one of the parties seeking, as a matter of right, payment of money, or other relief with respect to the terms of the Contract. The term "Claim" also includes other disputes and matters in question between the Owner and Contractor arising out of or relating to the Contract. The responsibility to substantiate Claims shall rest with the party making the Claim.

§ 15.1.2 NOTICE OF CLAIMS

Claims by either the Owner or Contractor must be initiated by written notice to the other party and to the Initial Decision Maker with a copy sent to the Architect, if the Architect is not serving as the Initial Decision Maker. Claims by either party must be initiated within 21 days after occurrence of the event giving rise to such Claim or within 21 days after the claimant first recognizes the condition giving rise to the Claim, whichever is later.

§ 15.1.3 CONTINUING CONTRACT PERFORMANCE

Pending final resolution of a Claim, except as otherwise agreed in writing or as provided in Section 9.7 and Article 14, the Contractor shall proceed diligently with performance of the Contract and the Owner shall continue to make payments in accordance with the Contract Documents. The Architect will prepare Change Orders and issue Certificates for Payment in accordance with the decisions of the Initial Decision Maker.

§ 15.1.4 CLAIMS FOR ADDITIONAL COST

If the Contractor wishes to make a Claim for an increase in the Contract Sum, written notice as provided herein shall be given before proceeding to execute the Work. Prior notice is not required for Claims relating to an emergency endangering life or property arising under Section 10.4.

§ 15.1.5 CLAIMS FOR ADDITIONAL TIME

§ 15.1.5.1 If the Contractor wishes to make a Claim for an increase in the Contract Time, written notice as provided herein shall be given. The Contractor's Claim shall include an estimate of cost and of probable effect of delay on progress of the Work. In the case of a continuing delay, only one Claim is necessary.

§ 15.1.5.2 If adverse weather conditions are the basis for a Claim for additional time, such Claim shall be documented by data substantiating that weather conditions were abnormal for the period of time, could not have been reasonably anticipated and had an adverse effect on the scheduled construction.

§ 15.1.6 CLAIMS FOR CONSEQUENTIAL DAMAGES

The Contractor and Owner waive Claims against each other for consequential damages arising out of or relating to this Contract. This mutual waiver includes

- .1 damages incurred by the Owner for rental expenses, for losses of use, income, profit, financing, business and reputation, and for loss of management or employee productivity or of the services of such persons; and
- .2 damages incurred by the Contractor for principal office expenses including the compensation of personnel stationed there, for losses of financing, business and reputation, and for loss of profit except anticipated profit arising directly from the Work.

This mutual waiver is applicable, without limitation, to all consequential damages due to either party's termination in accordance with Article 14. Nothing contained in this Section 15.1.6 shall be deemed to preclude an award of liquidated damages, when applicable, in accordance with the requirements of the Contract Documents.

§ 15.2 INITIAL DECISION

§ 15.2.1 Claims, excluding those arising under Sections 10.3, 10.4, 11.3.9, and 11.3.10, shall be referred to the Initial Decision Maker for initial decision. The Architect will serve as the Initial Decision Maker, unless otherwise indicated in the Agreement. Except for those Claims excluded by this Section 15.2.1, an initial decision shall be required as a condition precedent to mediation of any Claim arising prior to the date final payment is due, unless 30 days have passed after the Claim has been referred to the Initial Decision Maker with no decision having been rendered. Unless the Initial Decision Maker and all affected parties agree, the Initial Decision Maker will not decide disputes between the Contractor and persons or entities other than the Owner.

AIA Document A201™ – 2007. Copyright © 1911, 1915, 1918, 1925, 1937, 1951, 1958, 1961, 1963, 1966, 1970, 1976, 1987, 1997 and 2007 by The American Institute of Architects. **All rights reserved. WARNING: This AIA® Document is protected by U.S. Copyright Law and International Treaties. Unauthorized reproduction or distribution of this AIA® Document, or any portion of it, may result in severe civil and criminal penalties, and will be prosecuted to the maximum extent possible under the law.** This document was produced by AIA software at 13:15:40 on 05/08/2014 under Order No.9101999414_1 which expires on 12/08/2014, and is not for resale.
User Notes:

§ 15.2.2 The Initial Decision Maker will review Claims and within ten days of the receipt of a Claim take one or more of the following actions: (1) request additional supporting data from the claimant or a response with supporting data from the other party, (2) reject the Claim in whole or in part, (3) approve the Claim, (4) suggest a compromise, or (5) advise the parties that the Initial Decision Maker is unable to resolve the Claim if the Initial Decision Maker lacks sufficient information to evaluate the merits of the Claim or if the Initial Decision Maker concludes that, in the Initial Decision Maker's sole discretion, it would be inappropriate for the Initial Decision Maker to resolve the Claim.

§ 15.2.3 In evaluating Claims, the Initial Decision Maker may, but shall not be obligated to, consult with or seek information from either party or from persons with special knowledge or expertise who may assist the Initial Decision Maker in rendering a decision. The Initial Decision Maker may request the Owner to authorize retention of such persons at the Owner's expense.

§ 15.2.4 If the Initial Decision Maker requests a party to provide a response to a Claim or to furnish additional supporting data, such party shall respond, within ten days after receipt of such request, and shall either (1) provide a response on the requested supporting data, (2) advise the Initial Decision Maker when the response or supporting data will be furnished or (3) advise the Initial Decision Maker that no supporting data will be furnished. Upon receipt of the response or supporting data, if any, the Initial Decision Maker will either reject or approve the Claim in whole or in part.

§ 15.2.5 The Initial Decision Maker will render an initial decision approving or rejecting the Claim, or indicating that the Initial Decision Maker is unable to resolve the Claim. This initial decision shall (1) be in writing; (2) state the reasons therefor; and (3) notify the parties and the Architect, if the Architect is not serving as the Initial Decision Maker, of any change in the Contract Sum or Contract Time or both. The initial decision shall be final and binding on the parties but subject to mediation and, if the parties fail to resolve their dispute through mediation, to binding dispute resolution.

§ 15.2.6 Either party may file for mediation of an initial decision at any time, subject to the terms of Section 15.2.6.1.

§ 15.2.6.1 Either party may, within 30 days from the date of an initial decision, demand in writing that the other party file for mediation within 60 days of the initial decision. If such a demand is made and the party receiving the demand fails to file for mediation within the time required, then both parties waive their rights to mediate or pursue binding dispute resolution proceedings with respect to the initial decision.

§ 15.2.7 In the event of a Claim against the Contractor, the Owner may, but is not obligated to, notify the surety, if any, of the nature and amount of the Claim. If the Claim relates to a possibility of a Contractor's default, the Owner may, but is not obligated to, notify the surety and request the surety's assistance in resolving the controversy.

§ 15.2.8 If a Claim relates to or is the subject of a mechanic's lien, the party asserting such Claim may proceed in accordance with applicable law to comply with the lien notice or filing deadlines.

§ 15.3 MEDIATION

§ 15.3.1 Claims, disputes, or other matters in controversy arising out of or related to the Contract except those waived as provided for in Sections 9.10.4, 9.10.5, and 15.1.6 shall be subject to mediation as a condition precedent to binding dispute resolution.

§ 15.3.2 The parties shall endeavor to resolve their Claims by mediation which, unless the parties mutually agree otherwise, shall be administered by the American Arbitration Association in accordance with its Construction Industry Mediation Procedures in effect on the date of the Agreement. A request for mediation shall be made in writing, delivered to the other party to the Contract, and filed with the person or entity administering the mediation. The request may be made concurrently with the filing of binding dispute resolution proceedings but, in such event, mediation shall proceed in advance of binding dispute resolution proceedings, which shall be stayed pending mediation for a period of 60 days from the date of filing, unless stayed for a longer period by agreement of the parties or court order. If an arbitration is stayed pursuant to this Section 15.3.2, the parties may nonetheless proceed to the selection of the arbitrator(s) and agree upon a schedule for later proceedings.

AIA Document A201™ – 2007. Copyright © 1911, 1915, 1918, 1925, 1937, 1951, 1958, 1961, 1963, 1966, 1970, 1976, 1987, 1997 and 2007 by The American Institute of Architects. All rights reserved. WARNING: This AIA® Document is protected by U.S. Copyright Law and International Treaties. Unauthorized reproduction or distribution of this AIA® Document, or any portion of it, may result in severe civil and criminal penalties, and will be prosecuted to the maximum extent possible under the law. This document was produced by AIA software at 13:15:40 on 05/08/2014 under Order No.9101999414_1 which expires on 12/08/2014, and is not for resale.
User Notes:

(1919367023)

§ 15.3.3 The parties shall share the mediator's fee and any filing fees equally. The mediation shall be held in the place where the Project is located, unless another location is mutually agreed upon. Agreements reached in mediation shall be enforceable as settlement agreements in any court having jurisdiction thereof.

§ 15.4 ARBITRATION

§ 15.4.1 If the parties have selected arbitration as the method for binding dispute resolution in the Agreement, any Claim subject to, but not resolved by, mediation shall be subject to arbitration which, unless the parties mutually agree otherwise, shall be administered by the American Arbitration Association in accordance with its Construction Industry Arbitration Rules in effect on the date of the Agreement. A demand for arbitration shall be made in writing, delivered to the other party to the Contract, and filed with the person or entity administering the arbitration. The party filing a notice of demand for arbitration must assert in the demand all Claims then known to that party on which arbitration is permitted to be demanded.

§ 15.4.1.1 A demand for arbitration shall be made no earlier than concurrently with the filing of a request for mediation, but in no event shall it be made after the date when the institution of legal or equitable proceedings based on the Claim would be barred by the applicable statute of limitations. For statute of limitations purposes, receipt of a written demand for arbitration by the person or entity administering the arbitration shall constitute the institution of legal or equitable proceedings based on the Claim.

§ 15.4.2 The award rendered by the arbitrator or arbitrators shall be final, and judgment may be entered upon it in accordance with applicable law in any court having jurisdiction thereof.

§ 15.4.3 The foregoing agreement to arbitrate and other agreements to arbitrate with an additional person or entity duly consented to by parties to the Agreement shall be specifically enforceable under applicable law in any court having jurisdiction thereof.

§ 15.4.4 CONSOLIDATION OR JOINDER

§ 15.4.4.1 Either party, at its sole discretion, may consolidate an arbitration conducted under this Agreement with any other arbitration to which it is a party provided that (1) the arbitration agreement governing the other arbitration permits consolidation, (2) the arbitrations to be consolidated substantially involve common questions of law or fact, and (3) the arbitrations employ materially similar procedural rules and methods for selecting arbitrator(s).

§ 15.4.4.2 Either party, at its sole discretion, may include by joinder persons or entities substantially involved in a common question of law or fact whose presence is required if complete relief is to be accorded in arbitration, provided that the party sought to be joined consents in writing to such joinder. Consent to arbitration involving an additional person or entity shall not constitute consent to arbitration of any claim, dispute or other matter in question not described in the written consent.

§ 15.4.4.3 The Owner and Contractor grant to any person or entity made a party to an arbitration conducted under this Section 15.4, whether by joinder or consolidation, the same rights of joinder and consolidation as the Owner and Contractor under this Agreement.

AIA Document A201™ – 2007. Copyright © 1911, 1915, 1918, 1925, 1937, 1951, 1958, 1961, 1963, 1966, 1970, 1976, 1987, 1997 and 2007 by The American Institute of Architects. All rights reserved. WARNING: This AIA® Document is protected by U.S. Copyright Law and International Treaties. Unauthorized reproduction or distribution of this AIA® Document, or any portion of it, may result in severe civil and criminal penalties, and will be prosecuted to the maximum extent possible under the law. This document was produced by AIA software at 13:15:40 on 05/08/2014 under Order No.9101999414_1 which expires on 12/08/2014, and is not for resale.
User Notes:

(1919367023)

SECTION 00 73 00 – SUPPLEMENTARY GENERAL CONDITIONS

The General Conditions of the Contract for Construction, AIA Document A201, 2007 Edition, Articles 1 through 14 inclusive, is a part of this Contract, and is incorporated herein as fully as if here set forth.

The following supplements modify, change, delete from or add to the General Conditions of the Contract for Construction, AIA Document A201, 2007 Edition. Where any article of the General Conditions is modified or any paragraph, subparagraph or clause thereof is modified or deleted by these supplements, the unaltered provisions of that article, paragraph or clause shall remain in effect. In the case of conflict between these supplements and the General Conditions identified above, the more stringent clause, as determined by the Architect, shall govern.

MODIFICATIONS TO ARTICLE 1.

Paragraph 1.1 BASIC DEFINITIONS

Add the following Subparagraphs:

1.1.9 THE SURETY
The Surety shall be defined as the corporate body which is bound with and for the Contractor and which engages to be responsible for his acceptable performance of the Work and for his payment of all debts pertaining to the Work, and which body is licensed to do business within the State in which this Project is located.

1.1.10 APPROVED
The word "approved" shall be defined as the written approval by the Architect, except as otherwise modified. The terms "directed", "required", "permitted", or words of like import, shall be considered as similarly defined as to the party directing, requiring, permitting, or similarly instructing the contractor.

1.1.11 PROVIDE OR PROVIDED
The words "provide" or "provided" shall be defined as both furnishing and installing a thing, product, system, assembly, material, or the like.

1.1.12 ALL

"All" is implied throughout the Trade Sections of the Specifications and shall mean to do or accomplish all things under the Work, Contract, except where other provisions are specified. Hence, the use of the word "All" is limited, in general, to the general parts and the work included in the Scope of each and every Trade Section, or to residuary legate clauses requiring the doing of all things except those sequentially listed as excluded.

1.1.13 PRODUCT

Wherever the word "product" appears within the Contract Documents, it shall be understood to mean material, equipment, assemble, manufacturers, brands, trade names, items of similar description as applicable.

1.1.14 TRADE

The word "Trade" (with initial capital letter) is used herein to designate a Section title and not a trade or craft as set up for labor jurisdiction in an area.

Paragraph 1.2 CORRELATION AND INTENT OF THE CONTRACT DOCUMENTS

Add the following Subparagraph:

1.2.4 Large-scale details shall, in general, govern and take precedence over small-scale details, which they are intended to amplify. Figure dimensions. Do not obtain dimensions by scaling. In cases of discrepancy between Drawings and Specifications, consult the Architect before proceeding with the work. Should the Architect fail to be notified prior to commencement of the work, the responsibility for the work shall be that of the Contractor. If during the bidding or pricing of the contract, a discrepancy is noted and the Architect has not been consulted, the higher cost solution is to be taken for cost considerations and the solution will be determined by the Architect when notified.

Subparagraph 1.5.1

Add the following to Subparagraph **1.5.1**:

The Agreement between Owner and Contractor shall be executed in three counterparts. The Owner, Contractor, and Architect shall each be given an original executed Agreement and the Modifications issued after execution of the Contract

Paragraph 1.6 OWNERSHIP AND USE OF DRAWINGS, SPECIFICATIONS AND OTHER INSTRUMENTS OF SERVICE

Add the following Subparagraph:

1.6.2 Contractor's Use of Instruments of Service in Electronic Form.

1.6.2.1 The Architect may, with the concurrence of the Owner, furnish to the Contractor versions of Instruments of Service in electronic form. The Contract Documents executed or identified in accordance with Subparagraph 1.5.1 shall prevail in case of an inconsistency with subsequent versions made through manipulatable electronic means involving computers**.**

1.6.2.2 The Contractor shall not transfer or reuse Instruments of Service in electronic or machine readable form without the prior consent of the Architect. See Section 01 33 00 "Submittal Procedures" for conditions and requirements.

1.6.2.3 Sub Contractors and Material Suppliers must communicate through the Contractor for the use of Instruments of Service in Electronic Form.

MODIFICATIONS TO ARTICLE 2.

Subparagraph **2.2.3**

Delete the portion of the first sentence which reads, "...and a legal description of the site."

MODIFICATIONS TO ARTICLE 3.

Paragraph **3.3 SUPERVISION AND CONSTRUCTION PROCEDURES**

Add the following Subparagraphs:

3.3.4 The Contractor shall layout all the Work as required by the Drawings and be held responsible for damage, if any is incurred, due to incorrect layout of Work. The Contractor shall establish all building lines, benchmarks, and levels from which all trades can work, and take necessary measures to keep the marks in visible evidence throughout all stages of the Work.

3.3.5 In order to insure proper progress to Work, the Contractor shall be prepared to guarantee to each of his Subcontractors the dimensions which they may require for proper fitting of their work to all adjacent or adjoining work.

3.3.6 The Contractor shall verify all measurements at buildings and premises, and where necessary measurements cannot be secured at the Project when required, the matter shall be referred to the Architect.

Paragraph **3.4 LABOR & MATERIALS**

Delete subparagraph **3.4.2** in its entirety and substitute the following:
3.4.2 After the Contract has been executed, the Owner and the Architect will consider a formal request for the substitution of products in place of those specified only under the conditions set forth in the General Requirements of the Specifications (Division 01).
3.4.2.1 By making requests for substitutions based on Clause **3.4.2** above, the Contractor:

1. represents that the Contractor has personally investigated the proposed substitute product and determined that it is equal or superior in all respects to that specified;

2. represents that the Contractor will provide the same warranty for the substitution that the Contractor would for that specified;

3. certifies that the cost data presented is complete and includes all related costs under this Contract but excludes costs under separate contracts, and excludes the Architect's redesign costs, and waives all claims for additional costs related to the substitution which subsequently become apparent, and

4. will coordinate the installation of the accepted substitute, making such changes as may be required for the work to be complete in all respects.

Paragraph **3.6 TAXES**

Add the following Subparagraph 3.6.1:

The Contractor shall provide complete sale tax information to the Owner for use in filing for the tax refunds available to non-profit organizations if the owner is such an organization.

Subparagraph **3.8.2.2** Delete the semicolon at the end of Clause 3.8.2.2 and add the following :

,except that if installation is included as part of an allowance in Divisions 1-16 of the Specifications,

the installation and labor cost for greater or lesser quantities of Work shall be determined in accordance with Subparagraph 7.3.6;.

Subparagraph **3.12.5**

In the first line, delete the word, “approve.” and substitute “stamp with his approval...”.

MODIFICATIONS TO ARTICLE 5.

Subparagraph **5.2.1**

Add the following to the end of Subparagraph **5.2.1**:

No work shall be commenced until the names of the Subcontractors have been given in writing to the Architect. This list shall be furnished no later than 30 days after the date of commencement. If required, the Contractor shall furnish evidence satisfactory to the Architect showing that any or all proposed Subcontractors are competent to execute the various parts of the Work covered by their subcontract.

MODIFICATIONS TO ARTICLE 9.

Subparagraph **9.2**

Add the following to the end of Subparagraph **9.2**:

The schedule of values of the various portions of the Work shall be submitted on AIA form G703 and shall be filled out in full.

Subparagraph **9.3.1**

Add the following sentences to Subparagraphs to Subparagraph **9.3.1**:

The form of Application for Payment, duly notarized shall be a current authorized edition of AIA Document G702, Application and Certificate for Payment, supported by a current authorized edition of AIA Document G703 Continuation Sheet. The Contractor’s itemized estimate sheet used in preparation of the Application for Payment shall at all times be open for review by the Architect.

Add the following Subparagraph to Subparagraph 9.3.1:

9.3.1.3 Until final payment, the Owner will pay 90 percent of the amount due the Contractor on account of progress payments. If the manner of completion of the Work and its progress are and remain satisfactory to the Architect, and in the absence of other good and sufficient reason, when the total project is shown to be 75 percent or more complete in the Application for Payment, the Architect with concurrence by the Owner may, without reduction of previous retainage certify any remaining progress payments for each Work category to be paid in full.

9.3.1.3 Starting with the second Application for Payment, the Contractor shall verify that he has paid all Subcontractors and major material suppliers that amount drawn on the previous payment for their respective areas.

Subparagraph **9.10.2**

Add the following sentence to Subparagraph 9.10.2:

The forms for release shall be the current authorized editions AIA G706 and G706A.

MODIFICATIONS TO ARTICLE 10.

Subparagraph **10.2.4**

Add the following Subparagraph to Subparagraph **10.2.4**:

10.2.4.1 When use or storage of explosives or other hazardous materials, substances or equipment or unusual methods are necessary for execution of the Work, the Contractor shall give the Owner reasonable advance notice.

MODIFICATIONS TO ARTICLE 11.

Subparagraph **11.1.1.1**

Delete the semicolon at the end of Clause **11.1.1.1** and add:

, including private entities performing Work at the site and exempt from the coverage on account of number of employees or occupation, which entities shall maintain voluntary compensation coverage at the same limits specified for mandatory coverage for the duration of the Project;

Subparagraph **11.1.1.2**

Delete the semicolon at the end of Clause **11.1.1.2** and add:

or persons or entities excluded by statute from the requirements of Clause **11.1.1.1** but required by the Contract Documents to provide the insurance required by that clause;

Add the following Subparagraph **11.1.1.9**

11.1.1.9 Liability Insurance shall include all major divisions of coverage and be on a comprehensive basis, including:

1. Premises Operations (including X, C and U coverage's, as applicable).
2. Independent Contractors' Protective.
3. Products and Completed Operations.
4. Personal Injury Liability with Employment Exclusion deleted.
5. Contractual, including specified provisions for Contractor's obligation under Paragraph 3.18.
6. Owned, non-owned and hired motor vehicles.
7. Broad Form Property Damage, including Completed Operations.

Add the following Subparagraph **11.1.1.10**

11.1.1.10 If the General Liability coverage's are provided by a Commercial General Liability Policy on a claims-made basis, the policy date or Retroactive Date shall predate the Contract; the termination date of the policy or applicable extended reporting period shall be no earlier than the termination date of coverage's required to be maintained after final payment, certified in accordance

with Subparagraph 9.10.2.

Subparagraph **11.1.2**

Add the following Clause **11.1.2.1** to Subparagraph **11.1.2**:

11.1.2.1 The Contractor shall maintain, throughout the life of the Contract, insurance satisfactory to the Owner providing not less than the following minimum coverage:

Public Liability Insurance:

A. Comprehensive General Liability Insurance - This is the basic insurance which covers the Contractor for his negligent acts, errors, and omissions.

B. Contractor's Protective Liability Insurance - This insurance protects a Contractor from Liability arising from the negligent acts of his subcontractors.

C. Blanket Contractual Liability Insurance - This is an extension of the regular general liability policy to cover any written contract entered into by the insured contractor.

D. Completed Operations Liability Insurance - This form of insurance extends the time limit of the general liability policy to cover claims that may arise after work has been completed and turned over to the Owner.

E. General Commercial Liability (Claims Made***):***

General Aggregate: $2,000,000.00
Prods-Comp/OPS Agg.: $2,000,000.00
Pers. & Advg. Injury: $1,000,000.00
Each occurrence: $1,000,000.00
Fire Damage: $50,000.00
Medical expense: $5,000.00

F. Automobile Liability (any auto, hired autos, non-owned autos):

CSL: $1,000,000.00

G. Excess Liability (umbrella form):

Each occurrence: $2,000,000.00
Aggregate: $2,000,000.00

H. Workers' Comp. And Employers' Liability:

Each Accident: 1,000,000.00
Disease-Policy Limit: $1,000,000.00
Disease-Each Employee: $1,000,000.00

I. XCU coverage: The certificate of insurance shall state that the XCU exclusions have been eliminated.

Subparagraph **11.1.3**

Add the following sentence to Subparagraph **11.1.3**:

If this insurance is written on the Comprehensive General Liability policy form, the Certificates shall be ACORD Form 25S, accompanied by a completed AIA Document G715, Instruction Sheet and Attachment for ACORD Certificate of Insurance.

Add the following Subparagraphs to Paragraph **11.1**:

11.1.5 Each policy shall provide EITHER IN THE BODY OF THE POLICY OR BY APPROPRIATE ENDORSEMENT (RIDER) TO THE POLICY, that such policy cannot be altered or canceled in less than 30 consecutive calendar days after receipt by the Owner of such written notice.

Subparagraph **11.3.10**

Delete the remaining paragraph after the word “insurers” in the first line..

Subparagraph **11.4.1**

Add the following to Subparagraph **11.4.1**:

The bond shall be in the amount of 100% of the Contract amount.

Add the following Subparagraph to Paragraph 11.4:

11.4.3 If a Bond (or Bonds) is required by the Owner, each Bond shall provide either in the body of the Bond or by appropriate endorsement (Rider) to the Bond that: This obligation shall remain in full force and effect for any and all duly authorized modifications of said Contract and that may hereinafter be made, except that no change will be made which increases the total Contract Sum more than twenty percent in excess of the original Contract Sum without notice to the Surety.

END OF SECTION 00 73 00

Division 01 - General Requirements

SECTION 01 10 00 – SUMMARY OF WORK

PART 1 - GENERAL

1.1 RELATED DOCUMENTS

A. Drawings and general provisions of the Contract, including General and Supplementary Conditions and other Division 01 Specification Sections, apply to this Section.

1.2 WORK COVERED BY CONTRACT DOCUMENTS

A. Project Identification: Project consists of construction of a new +/- 76,000 sf 4 story City Hall.
   1. Project Location: 35 Cabarrus Avenue West, Concord, NC 28025.
   2. Owner: City of Concord, NC

B. Architect Identification: The Contract Documents, date indicated on the Contract Documents, were prepared for Project by ADW Architects 101 West Worthington Ave.; Suite 270 Charlotte, North Carolina 28203. Phone:(704) 379-1919.

C. Construction Manager-at-Risk: CMBlack has been engaged as the Construction Manager-at-risk for this Project. All references to contractor in these specifications shall also mean Construction Manager-at-Risk (CMAR)

D. Project Coordinator: Sue Hyde has been appointed by Owner to serve as Project Coordinator.

E. The Work consists of a new 4 story City Hall building consisting of approximately 76,000 sf.
   1. The work includes soil excavation, soil improvement, concrete foundation walls, steel framed structure, concrete slabs on grade, elevated composite slabs.
   2. The project also includes standpipe/fire sprinkler system for fire protection.
   3. Interior finishes includes a combination of gypsum wallboard on metal studs or furring channels and painted block walls. Acoustical and gypsum board ceilings. Floors finishes include carpet, ceramic tile, acoustical wall and ceiling treatments, signage and wood panels.
   4. 3 Elevators are included.

1.3 CONTRACT

A. Project will be constructed under the construction manager at risk process.

1.4 SITE INVESTIGATION

A. The Contractor acknowledges that he has satisfied himself as to the nature and location of the Work, the general and local conditions, particularly those bearing upon transportation, disposal, handling and storage of materials, availability of labor, water, electric power, roads and uncertainties of weather, ground water table, unsuitable soils, contaminated soils or similar physical conditions at the site, the conformation and condition of the ground, the character, quality and quantity of surface and subsurface materials to be encountered, the character of equipment and facilities needed prior to and during the performance of the Work and all other

matters which can in any way affect the Work or the cost thereof under this Contract. Any failure by the Contractor to acquaint himself with all the available information concerning these conditions will not relieve him from responsibility for estimating properly the difficulty or cost of successfully performing the Work.

1.5 USE OF PREMISES

A. Vacant Site or Unoccupied Building
   1. General: Contractor shall have full use of premises for construction operations, including use of Project site, during construction period. Contractor's use of premises is limited only by Owner's right to perform work or to retain other contractors on portions of Project.
   2. Permitted work hours: Monday-Friday 7am-7pm, Saturday 9am-7pm, no work will be allowed on Sunday. If work needs to be performed outside of these hours they will need to be coordinated with the Owner.

B. Partial Owner Occupancy
   1. The Owner reserves the right of partial occupancy or use of facilities, services, and utilities, prior to Substantial Completion, without implying completion or acceptance of any part of the Project.
   2. Prior to such occupancy or use, procedures as outlined in Section 01 77 00, “Closeout Procedures” will be adhered to.
   3. The Contractor shall provide access to the building for the Owner’s personnel plus provide the correct operation of the heating, ventilation, and air conditioning, and electrical system. Provide for the correct operation of the elevator system for the Owner’s use.
   4. The Contractor shall also permit the Owner to place and install, or to have other Contractors place and install, as much equipment during the progress of the Work as is possible before the final acceptance of the various parts of the Work, and shall coordinate such placing and installation of the equipment, so that it does not in any way whatever interfere with the progress of the Work or any portion of it.

C. Owner Occupancy
   1. Contractor shall at all times conduct his operations as to insure the least inconvenience and the greatest amount of safety and security for the Owner, his staff, and the general public around the site.

1.6 PROTECTION REQUIREMENTS FOR NEW AND EXISTING CONSTRUCTION

A. Protect the existing police building from damage of any sort. Provide all equipment and enclosures to maintain this protection, protect the occupants of the existing police building and any egress routs from that building and keep the building protected during the life of the Contract. Coordinate any temporary disruptions with the Police Department prior to the disruption. Coordinate any temporary disruptions to the existing egress with the local Fire Marshal.

B. Provide all shoring and bracing required to maintain the integrity and the safety of the existing police building structure and for the proper execution of the Work.

C. Exercise the utmost care to protect all existing utility lines from damage during the progress of the Work.

D. Provide and erect before any work begins, and maintain during the progress of the Work, all necessary fences, warning signals, signs and lights. Extent of this work and details of construction shall be in accordance with the requirements of all state and local codes.

E. Any portion of the existing building or existing utility services not included as part of this Contract or any portion of the Work damaged because of failure to provide the protection required shall be removed and replaced with new materials and construction at the Contractor's expense. This work shall be accomplished subject to the Architect's and Owners' approval.

1.7 REPLACEMENT AND REPAIR OF ANY STRUCTURES THAT HAVE BEEN DESTROYED IN THE PROGRESS OF THE WORK:

A. Because of the installation of the new items of equipment, fixtures, materials, etc., that are required by this Project, it shall become necessary to remove portions of the existing Police Building structure, equipment, and/or utility services. Unless specifically noted otherwise on the Drawings, the Contractor shall be responsible for replacing, in a condition of identical appearance, construction, design, working order, and strength as its previous state, any such portion of the existing structure, equipment, and/or utility services so required to be disturbed. The replaced item shall meet the approval of the Architect before final approval of the Project is given.

1.8 WORK UNDER OTHER CONTRACTS

A. Separate Contract: Owner will award a separate contract for performance of certain construction operations at Project site. Those operations will be conducted simultaneously with work under this Contract. This contract will include the following:
1. Security systems
2. Audio video systems
3. Furniture installation
4. Building systems commissioning
5. Special inspections and materials testing

B. Cooperate fully with separate contractors so work on those contracts may be carried out smoothly, without interfering with or delaying work under this Contract.

1.9 OWNER-FURNISHED CONTRACTOR INSTALLED PRODUCTS

A. Owner will furnish break room equipment. The Work includes providing support systems to receive Owner's equipment and plumbing, mechanical, and electrical connections.
1. Owner will arrange for and deliver Product Data Contractor.
2. Owner will arrange and pay for delivery of Owner-furnished items according to Contractor's Construction Schedule.
3. After delivery, Owner will inspect delivered items for damage. Contractor shall be present for and assist in Owner's inspection.
4. If Owner-furnished items are damaged, defective, or missing, Owner will arrange for replacement.
5. Owner will arrange for manufacturer's field services and for delivery of manufacturer's warranties to Contractor.
6. Owner will furnish Contractor the earliest possible delivery date for Owner-furnished products. Using Owner-furnished earliest possible delivery dates, Contractor shall designate delivery dates of Owner-furnished items in Contractor's Construction Schedule.

7. Contractor shall review Product Data and return them to Architect noting discrepancies or anticipated problems in use of product.
8. Contractor is responsible for receiving, unloading, and handling Owner-furnished items at Project site.
9. Contractor is responsible for protecting Owner-furnished items from damage during storage and handling, including damage from exposure to the elements.
10. If Owner-furnished items are damaged as a result of Contractor's operations, Contractor shall repair or replace them.

1.10 SPECIFICATION FORMATS AND CONVENTIONS

A. Specification Format: The Specifications are organized into Divisions and Sections using the 49-division format and CSI/CSC's "MasterFormat" numbering system.
   1. Section Identification: The Specifications use section numbers and titles to help cross-referencing in the Contract Documents. Sections in the Project Manual are in numeric sequence; however, the sequence is incomplete. Consult the table of contents at the beginning of the Project Manual to determine numbers and names of sections in the Contract Documents.

B. Specification Content: The Specifications use certain conventions for the style of language and the intended meaning of certain terms, words, and phrases when used in particular situations. These conventions are as follows:
   1. Abbreviated Language: Language used in the Specifications and other Contract Documents is abbreviated. Words and meanings shall be interpreted as appropriate. Words implied, but not stated, shall be inferred as the sense requires. Singular words shall be interpreted as plural, and plural words shall be interpreted as singular where applicable as the context of the Contract Documents indicates.
   2. Imperative mood and streamlined language are generally used in the Specifications. Requirements expressed in the imperative mood are to be performed by Contractor. Occasionally, the indicative or subjunctive mood may be used in the Section Text for clarity to describe responsibilities that must be fulfilled indirectly by Contractor or by others when so noted.
      a. The words "shall," "shall be," or "shall comply with," depending on the context, are implied where a colon (:) is used within a sentence or phrase.

PART 2 - PRODUCTS (Not Used)

PART 3 - EXECUTION (Not Used)

END OF SECTION 01 10 00

SECTION 01 21 00 - ALLOWANCES

PART 1 - GENERAL

1.01 SCOPE:

A. The Contractor shall include in the Contract Sum all allowances stated in the Contract Documents.

B. Items covered by these allowances shall be supplied for such amounts and by such persons as the Architect may direct.

C. Designate in Construction Schedule delivery dates for products under each allowance.

D. Designate in Schedule of Values quantities of materials specified under unit cost allowances.

1.02 SELECTION OF PRODUCTS:

A. Architect's Duties:
1. Consult with Contractor in consideration of products and suppliers. Make selection, designate products to be used. Notify Contractor, in writing, designating:
a. Product, model, and finish.
b. Accessories and attachments.
c. Supplier.
d. Cost, delivered and unloaded at site.

B. Contractor's Duties:
1. Assist Architect in determining qualified suppliers. Obtain proposals from suppliers when requested by Architect. Make appropriate recommendations for consideration of Architect. Notify Architect of any effect anticipated by selection of product or supplier under consideration on the Construction schedule or the Contract Sum.
2. On notification of selection, enter into purchase agreement with designated supplier.

1.03 DELIVERY:

A. Contractor's Responsibility:
1. Arrange for delivery and unloading.
2. Promptly inspect products for damage or defects.
3. Submit claims for transportation damage.

1.04 INSTALLATION:

A. Comply with requirements of referenced specification section.

1.05 ADJUSTMENT OF COSTS:

A. Each Allowance includes the cost, expense, and/or materials as set forth for each item.

B. In the event the materials, as set forth in each allowance, do not cost, as much as allotted, a credit shall revert to the Owner.

C. In the event the materials, as set forth in each allowance, are not used in their entirety, a monetary credit shall revert to the Owner.

D. In either of the above instances, the Contractor shall be required to substantiate quantity actually used of the allotted monies and/or materials.

PART 2 - PRODUCTS

2.01 ALLOWANCE NO. 1 – REMOVAL AND DISPOSAL OF UNSUTABLE SOIL:

A. Contractor shall account for the removal and disposal of unsuitable soil in accordance with CM Black bid packages.

2.02 ALLOWANCE NO. 2 – REMOVAL AND DISPOSAL OF IMPACTED SOIL:

A. Contractor shall account for the removal and disposal of impacted soil in accordance with CM Black bid packages.

PART 3 - EXECUTION

(NOT APPLICABLE)

END OF SECTION 01 21 00

SECTION 01 22 00 - UNIT PRICES

PART 1 - GENERAL

1.1 SUMMARY

A. This Section includes administrative and procedural requirements for unit prices.

B. See Division 01 Section "Allowances" for procedures for using unit prices to adjust quantity allowances.

1.2 DEFINITIONS

A. Unit price is an amount proposed by bidders, stated on the Bid Form, as a price per unit of measurement for materials or services added to or deducted from the Contract Sum by appropriate modification, if estimated quantities of Work required by the Contract Documents are increased or decreased.

1.3 PROCEDURES

A. Unit prices include all necessary material, plus cost for delivery, installation, insurance, applicable taxes, overhead, and profit.

B. Measurement and Payment: Refer to individual Specification Sections for work that requires establishment of unit prices. Methods of measurement and payment for unit prices are specified in those Sections.

C. Owner reserves the right to reject Contractor's measurement of work-in-place that involves use of established unit prices and to have this work measured, at Owner's expense, by an independent surveyor acceptable to Contractor.

D. List of Unit Prices: A list of unit prices is included at the end of this Section. Specification Sections referenced in the schedule contain requirements for materials described under each unit price.

PART 2 - PRODUCTS (Not Used)

PART 3 - EXECUTION

3.1 LIST OF UNIT PRICES

A. **Unit Price No. #1**: REMOVAL OF UNSUITABLE SOIL

1. Description: Removal of unsuitable soil, including procedures for measurement and payment, according to Division 31.
2. Unit of Measurement: Per cubic yard.

B. **Unit Price No. #2**: IN-PLACE STRUCTURAL FILL

1. Description: In-place Structural Fill, including procedures for measurement and payment, according to Division 31.
2. Unit of Measurement: Per cubic yard.

C. **Unit Price No. #3**: ROCK EXCAVATION (TRENCHING)

1. Description: Rock excavation for trenching, including procedures for measurement and payment, according to Division 31.
2. Unit of Measurement: Per cubic yard.

D. **Unit Price No. #4**: REMOVAL OF MASS ROCK

1. Description: Removal of mass rock, including procedures for measurement and payment, according to Division 31.
2. Unit of Measurement: Per cubic yard.

E. **Unit Price No. #5**: REMOVAL AND DISPOSAL OF IMPACTED SOIL

1. Description: Removal of and disposal of impacted soil, including procedures for measurement and payment, according to Division 31.
2. Unit of Measurement: Per cubic yard.

END OF SECTION 01 22 00

SECTION 01 23 00 - ALTERNATES

PART 1 - GENERAL

1.01 DESCRIPTION:

A. This section summarizes the alternate bids required to be submitted with each Bidder's bid. State in the alternate bids the net sum to be added to, or deducted from the Base Bid in the event the alternate bids are accepted.

B. Submit alternate bids by filling in blank spaces provided thereof on the Bid Form furnished by the Architect.

C. The Owner reserves the right to accept or reject any or all of the alternate bids.

D. Where the description of the alternate bids lists Trade Sections affected by the alternate bid, such a listing shall not necessarily be considered all-inclusive. It shall be the responsibility of each Bidder to determine to his own satisfaction and for his own purposes the limits and extend of the Work affected by the alternate bids and to make full and proper allowance therefore in the submission of his alternate bid proposal.

E. Include in the alternate bids all changes in cost, either additive or deductive, resulting in the work of all Trade Sections of the Specifications affected thereby. Work required by the alternate bids shall be performed in accordance with applicable Specifications of the Trade Section affected.

F. Delayed acceptance of the alternate bids: The Owner reserves the right to delay the acceptance of the alternate bids for a period not to exceed 30 calendar days from the time of accepting the general contract without a change in the dollar amount of the alternate bids.

1.02 WORK OF OTHER RELATED SECTIONS:

A. Pertinent Sections of these Specifications describe the materials and methods required under the various alternates.

B. The method for stating the proposed Contract Sum is described on the Bid Form.

1.03 SUBMITTALS:

A. All alternates described in this Section of these Specifications are required to be reflected in the bid submitted on the Bid Form for the Work; however, do not submit alternates other than those specifically allowed in the Documents.

1.04 PRODUCT HANDLING:

A. If the Owner elects to proceed on the basis of one or more of the alternates, make all modifications to the Work required in the furnishing and installation of the selected alternate or alternates to the approval of the Architect and at no additional cost to the Owner other than as proposed on the Bid Form.

PART 2 - PRODUCTS

2.01 ALTERNATE NO. 1 - High Density Storage System (room 334)

2.02 ALTERNATE NO. 2 – High Density Storage System (room 432)

2.03 ALTERNATE NO. 3 – Sub-Slab Vapor Mitigation System Option B

PART 3 - EXECUTION

3.01 ADVANCE COORDINATION:

A. Immediately after award of Contract, and to the maximum extent possible, thoroughly and clearly advise all necessary personnel and suppliers as to the nature and extent of alternatives selected by the Owner; use all means necessary to alert those personnel and suppliers involved as to all changes in the work caused by the Owner's selection of alternatives.

3.02 SURFACE CONDITIONS:

A. Prior to installation of the alternate items, verify that all surfaces have been modified as necessary to accept the installation and that the time or items may be installed in complete accordance with their manufacturer's current recommendations. In the event of discrepancy, immediately notify the Architect and proceed as he directs.

END OF SECTION 01 23 00

SECTION 01 25 00 - PRODUCT SUBSTITUTIONS-PRIOR TO BID

PART 1 - GENERAL

1.1 RELATED DOCUMENTS

A. Drawings and general provisions of Contract, including General and Supplementary Conditions and other Division 01 Specification Sections, apply to this Section.

B. The General Conditions of the Contract for Construction (AIA A201-1997) article 1.2 apply to this section

1.2 SUMMARY

A. This Section specifies administrative and procedural requirements for handling requests for substitutions prior to the Owner's receipt of bids.

1. Multiple Prime Contracts: Provisions of this Section apply to the construction activities of each prime Contractor.

B. The Contractor's Construction Schedule and the Schedule of Submittals are included under Division 01 Section "Construction Progress Documentation".

C. Standards: Refer to Division 01 Section "References" for applicability of industry standards to products specified.

D. Procedural requirements governing the Contractor's selection of products and product options are included under Division 01 Section "Product Requirements".

1.3 DEFINITIONS

A. Definitions used in this Article are not intended to change or modify the meaning of other terms used in the Contract Documents.

B. Substitutions: Requests for changes in products, materials, and equipment, of construction required by Contract Documents proposed by the Contractor are considered requests for "substitutions". The following are not considered substitutions:

1. Substitutions that are requested by Bidders beyond the 10 days prior to bid opening submittal period.
2. Revisions to Contract Documents requested by the Owner or Architect.
3. Specified options of products and construction methods included in Contract Documents.
4. The Contractor's determination of and compliance with governing regulations and orders issued by governing authorities.

1.4 SUBMITTALS

A. Substitution Request Submittal: Requests for substitution from prime bidders will be considered if received by the architect ten (10) days prior to the bid opening.

1. Submit three (3) copies of each request for substitution for consideration. Submit requests in the form and in accordance with procedures required below.
2. Identify the product or the fabrication or installation method to be replaced in each request. Include related specification sections and drawing number.
3. Provide complete documentation on both the product specified and the proposed substitution including the following information as appropriate.

    a. Comparison of specified and proposed substitute product data, fabrication drawings, and installation procedures.
    b. Samples where applicable or requested.
    c. A detailed comparison of significant qualities of the proposed substitution with those of the work specified.
    d. Coordination information, including a list of changes or modifications needed to other parts of the Work and to construction performed by the Owner and separate Contractors, that will become necessary to accommodate the proposed substitution.

4. Certification by the Contractor or manufacturer that the substitution proposed is equal-to or better in every respect to that required by the Contract Documents, and that it will perform equal or superior to product specified in the application indicated. The Contractor waives any right to additional payment or time, that may subsequently become necessary because of the failure of the substitution to perform adequately.

5. Architect's Action: The Architect may request additional information or documentation necessary for evaluation of the request. The Architect will notify the Contractors of acceptance of the proposed substitution by means of an addendum to the bid documents. If the proposed substitute is accepted through an addendum use the product specified by name.

B. Architect/Engineer's Substitution Approval during bidding and subsequent addendums does not void the Contractor's responsibility to submit the required shop drawings and comply with the other contract documents and requirements.

PART 2 - PRODUCTS

2.1 SUBSTITUTIONS

A. Conditions: The Contractor's substitution request will be received and considered by the Architect when all of the following conditions are satisfied, as determined by the Architect; otherwise requests will be returned without action except to record noncompliance with these requirements.

1. Extensive revisions to Contract Documents are not required.
2. Proposed changes are in keeping with the general intent of Contract Documents.
3. The request is timely, fully documented and properly submitted.
4. The request is directly related to an "or equal" clause or similar language in the Contract Documents.

B. The Contractor's submittal and Architect's acceptance of Shop Drawings, Product Data or Samples that relate to construction activities not complying with the Contract Documents does not constitute an approval or valid request for substitution.

PART 3 - EXECUTION

A. Submit in format as outlined on following page.

PRODUCT SUBSTITUTION

Project _____

Date: _____ Bid Opening Date:_____

Product and / or Fabrication Method: _____

Spec Section: _____

Related Drawings: _____

Criteria or Specified Product	Included
Product Data	_____
Fabrication Drawings	_____
Samples Where Applicable	_____
List of changes or Modifications Needed to Work as Noted in Spec	_____

Criteria or Specified Product	Included
Product Data	_____
Fabrication Drawings	_____
Samples Where Applicable	_____
List of changes or Modifications Needed to Work as Noted in Spec	_____

The substitution proposed is equal-to or better in every respect to that required by the Contract Documents, and it will perform equal or superior to product specified in the application indicated. The Contractor waives right to additional payment or time, that may subsequently become necessary because of the failure of the substitution to perform adequately.

Signed: _____

END OF SECTION 01 25 00

SECTION 01 25 13 - PRODUCT SUBSTITUTIONS-POST BID

PART 1 - GENERAL

1.1 RELATED DOCUMENTS

A. Drawings and general provisions of the Contract including the General and Supplementary Conditions and other Division 01 Specification Sections apply to this section.

B. The General Conditions of the Contract for Construction (AIA201-1997) Article 1.2 apply to this section

1.2 SUMMARY

A. During bidding period, the Bidders shall comply with the substitution request procedures specified in the Section 01 25 00 of the Project Manual.

B. This Section specifies administrative and procedural requirements for handling requests for substitutions proposed by the Contractor after the award of the Contract.

C. The substitution process is available as a means to promote fair and open procurement by the Owner, and not to provide the Contractor the opportunity to substitute products of an inferior quality. To that end, the Owner reserves the right to reject a product not deemed an equal to the product specified; charge the Contractor for the Additional Services, if required, of the Architect; or require an equitable credit for the substituted product.

D. Multiple Prime Contracts: Provisions of this section apply to the construction activities of each Prime Contractor.

E. The Contractor's Construction Schedule and the Schedule of Submittals are included under Division 01 Section "Construction Progress Documentation".

F. Standards: Refer to Division 01 Section "References" for applicability of industry standards to products specified.

G. Procedural requirements governing the Contractor's selection of products and product options are included under Division 01 Section "Product Requirements".

1.3 DEFINITIONS

A. Definitions used in the Article are not intended to change or modify the meaning of other terms used in the Contract Documents.

B. Substitutions: Requests for changes in products, materials, equipment and methods of construction required by Contract Documents proposed by the Contractor after award of the Contract are considered requests for "substitutions". The following are not considered substitutions:

1. Revisions to Contract Documents requested by the Owner or Architect.

2. Specified options of products and construction methods included in Contract Document.
3. The Contractor's determination of and compliance with governing regulations and orders issued by governing authorities.

1.4 SUBMITTALS

A. Requests for Substitution will be considered during the bidding period. Refer to Section 01 25 00.

B. Substitution Request Submittal: Requests for substitution will be considered if received within thirty (30) days after the Notice to Proceed, or Letter of Intent, which ever comes first. Requests received more than thirty (30) days after the commencement of the work may be considered or rejected at the discretion of the Architect. Substitution items submitted without requests will be rejected.

1. Submit three (3) copies of each request for substitution for consideration. Submit requests in the form and in accordance with the procedures required for change order proposals.

2. Clearly indicate on the transmittal that the product being submitted is a substitution. Do not include on the same transmittal, any product that is not a substitution.

3. Provide a credit change order proposal if the substitution is intended to provide the Owner a product of a lesser value than the value of the specified product. If the substitution will not result in a savings to the owner, then clearly narrate the reason for the proposed change.

4. Identify the product or the fabrication or installation method to be replaced in each request. Include related Specification Section and Drawing numbers. Provide complete documentation showing compliance with the requirements for substitutions and the following information as appropriate:

a. Product Data, including Drawings and descriptions of products, fabrications and installation procedures.
b. Samples, where applicable or requested.
c. A detailed comparison of significant qualities of the proposed substitution with those for the Work specified. Significant qualities may include elements such as size, weight, durability, performance and visual effect.
d. Coordination information, including a list of changes or modifications needed to other parts of the Work and to construction performed by the Owner and separate Contractors, that will become necessary to accommodate the proposed substitution.
e. A statement indicating the substitution's effect on the Contractor's Construction Schedule compared to the schedule without approval of the substitution. Indicate the effect of the proposed substitution on overall Contract Time.
f. Certification by the Contractor that the substitution proposed is equal-to or better in every significant respect to that required by the Contract

Documents and that it will perform adequately in the application intended. Include the Contractor's waiver of rights to additional payment for time that may subsequently become necessary because of the failure of the substitution to perform adequately.

g. Cost information, including a proposal of the net change, if any in the contract sum.

5. Architect's Action: The Architect may request additional information or documentation necessary for evaluation of the request. The Architect will notify the Contractor of acceptance or rejection of the proposed substitution. If a decision on use of a proposed substitute cannot be made, use the product specified by name.

PART 2 - PRODUCTS

2.1 SUBSTITUTIONS

A. Conditions: The Contractor's substitution request will be received and considered by the Architect when all of the following conditions are satisfied, as determined by the Architect; otherwise, requests will be returned without action except to record noncompliance with these requirements.

1. Extensive revisions to Contract Documents are not required.
2. Proposed changes are in keeping with the general intent of Contract Documents.
3. The request is timely, fully documented and properly submitted.
4. The request is directly related to an "or-equal" clause or similar language in the Contract Documents.
5. Where a proposed substitution involves more than one (1) prime Contractor, each Contractor shall cooperate with the other Contractors involved to coordinate the Work, provide uniformity and consistency and to assure compatibility of products.

6. The specified product or method of construction cannot be provided within the Contract Time. The request will not be considered if the product or method cannot be provided as a result of failure to pursue the Work promptly or coordinate activities properly.

7. A substantial advantage is offered the Owner, in terms of cost, time, energy conservation or other considerations of merit, after deducting offsetting responsibilities the Owner may be required to bear. Additional responsibilities for the Owner may include additional compensation to the Architect for re-design and evaluation services, increased cost of other construction by the Owner or separate Contractors and similar considerations.

B. The Contractor's submittal and Architect's acceptance of Shop Drawings, product Data or Samples that relate to construction activities not complying with the Contract Documents does not constitute an approval or valid request for substitution.

PART 3 - EXECUTION (Not Applicable)

END OF SECTION 01 25 13

STATE AND COUNTY SALES/USE TAX STATEMENT AND CERTIFICATION

SHEET #_____

CONTRACT #_____

Contractor (or Sub-Contractor's) name: _____

Address: _____
Street Address/P.O. Box City State Zip Code

Project: _____

Invoice #	Invoice Date	Vendor's Name	Sub-Total Amount of Invoice	Sales/Use Tax	
				STATE ____%	CO. __%
		TOTALS =			

This will certify that the above listed amounts include only Sales or Use Taxes paid on purchases of tangible personal property purchased for use in performing the contract for constructing the above mentioned project which have become annexed to, affixed to, or have become a part of the building or structure.

SWORN AND SUBSCRIBED BEFORE ME BY: _____

THIS _____ DAY OF _____, 2001

_____ NOTARY PUBLIC

MY COMMISSION EXPIRES: _____

SECTION 01 31 00 - PROJECT MANAGEMENT AND COORDINATION

PART 1 - GENERAL

1.1 RELATED DOCUMENTS

A. Drawings and general provisions of the Contract, including General and Supplementary Conditions and other Division 01 Specification Sections, apply to this Section.

1.2 SUMMARY

A. This Section includes administrative provisions for coordinating construction operations on Project including, but not limited to, the following:
   1. General project coordination procedures.
   2. Coordination Drawings.
   3. Administrative and supervisory personnel.
   4. Project meetings.

B. Related Sections: The following Sections contain requirements that relate to this Section:
   1. Division 01 Section “Construction Progress Documentation” for preparing and submitting the Contractor’s Construction Schedule.
   2. Division 01 Section "Execution Requirements" for procedures for coordinating general installation and field-engineering services, including establishment of benchmarks and control points.
   3. Division 01 Section “Closeout Procedures” for coordinating Contract closeout.

1.3 COORDINATION

A. Coordination: The Contactor shall coordinate its construction operations with those of other contractors and entities to ensure efficient and orderly installation of each part of the Work. The Contractor shall coordinate its operations with operations, included in different Sections that depend on each other for proper installation, connection, and operation.
   1. Schedule construction operations in sequence required to obtain the best results where installation of one part of the Work depends on installation of other components, before or after its own installation.
   2. Coordinate installation of different components with other contractors to ensure maximum accessibility for required maintenance, service, and repair.
   3. Make adequate provisions to accommodate items scheduled for later installation.

B. Contact Progress Reporting: The scheduling and sequence of all operations shall be carefully coordinated with the Owner and Architect.

C. If necessary, prepare memoranda for distribution to each party involved, outlining special procedures required for coordination. Include such items as required notices, reports, and list of attendees at meetings.
   1. Prepare similar memoranda for Owner and separate contractors if coordination of their Work is required.

D. Administrative Procedures: Coordinate scheduling and timing of required administrative procedures with other construction activities and activities of other contractors to avoid conflicts and to ensure orderly progress of the Work. Such administrative activities include, but are not limited to, the following:

1. Preparation of Contractor's Construction Schedule.
2. Preparation of the Schedule of Values.
3. Installation and removal of temporary facilities and controls.
4. Delivery and processing of submittals.
5. Progress meetings.
6. Preinstallation conferences.
7. Project closeout activities.

1.4 SUBMITTALS

A. Coordination Drawings: Prepare Coordination Drawings if limited space availability necessitates maximum utilization of space for efficient installation of different components or if coordination is required for installation of products and materials fabricated by separate entities.
   1. Indicate relationship of components shown on separate Shop Drawings.
   2. Indicate required installation sequences.
   3. Refer to Divisions 21, 22 & 23 for specific Coordination Drawing requirements for fire suppression, plumbing and mechanical installations.
   4. Refer to Division 26 for specific Coordination Drawing requirements for electrical installations.

1.5 PROJECT MEETINGS

A. General Project Meetings: The Architect shall conduct Project coordination/progress meetings on a Monthly basis. Project coordination meetings are in addition to specific meetings held for other purposes, such as preinstallation conferences. Schedule and conduct meetings and conferences at Project site, unless otherwise indicated
   1. The Contractor shall attend the monthly progress meetings for the purpose of informing the Owner and the Architect regarding the status of the project. Compile minutes of the meeting, and furnish a copy of the minutes to atendents.
   2. Attendees: Owner, Contractor, Job Superintendent, Material Suppliers, and Subcontractors, as appropriate. Each representative shall be thoroughly familiar with the status of the project and shall be prepared to discuss and act upon any situations which may arise. The time, date and location of these meetings will be established during pre-construction conference. The General Contractor shall provide an updated job progress schedule at each meeting and inform participants and others involved, and individuals whose presence is required, of date and time of each meeting. Notify Owner and Architect of scheduled meeting dates and times.
   3. Agenda: Review and correct or approve minutes of the previous coordination meeting. Review other items of significance that could affect progress. Include topics for discussion as appropriate to status of Project.
      a. Combined Contractor's Construction Schedule: Review progress since the last coordination meeting. Determine whether each contract is on time, ahead of schedule, or behind schedule, in relation to Combined Contractor's Construction Schedule. Determine how construction behind schedule will be expedited; secure commitments from parties involved to do so. Discuss whether schedule revisions are required to ensure that current and subsequent activities will be completed within the Contract Time.
      b. Schedule Updating: Revise Combined Contractor’s Construction Schedule after each coordination meeting where revisions to the schedule have been made or recognized. Issue revised schedule concurrently with report of each meeting.
      c. Review present and future needs of each entity present, including the following:
         1) Interface requirements.
         2) Sequence of operations.
         3) Status of submittals.

4) Deliveries.
5) Off-site fabrication.
6) Access.
7) Site utilization.
8) Temporary facilities and controls.
9) Work hours.
10) Hazards and risks.
11) Progress cleaning.
12) Quality and work standards.
13) Change Orders

B. Preconstruction Conference: A preconstruction conference before starting construction, at a time convenient to Owner and Architect, but no later than 15 days after execution of the Agreement. Hold the conference at Project site or another convenient location. Conduct the meeting to review responsibilities and personnel assignments. The Architect will compile minutes of the meeting, and will furnish a copy of the minutes to the Contractor and Owner.

1. Attendees: Authorized representatives of Owner, Architect, Engineer′s Representative, Contractor and their consultants; The Contractor and its job Superintendent (mandatory), job Foreman (mandatory), major subcontractors; manufacturers; suppliers; and other concerned parties shall attend the conference. All participants at the conference shall be familiar with Project and authorized to conclude matters relating to the Work. The Contractor shall also provide three (3) local telephone numbers which may be used to contact the Contractor or his authorized representative in the event of an emergency after normal business hours.
2. Agenda: Discussion of Organizational arrangement of Contractor′s forces and personnel, and those of subcontractors, materials suppliers, with the Architect and Owner, including channels and procedures for communication. Items of significance that could affect progress, including the following:
   a. Tentative construction schedule.
   b. Critical work sequencing.
   c. Designation of responsible personnel.
   d. Procedures for processing field decisions and Change Orders.
   e. Procedures for processing Applications for Payment.
   f. Distribution of the Contract Documents.
   g. Submittal procedures.
   h. Preparation of Record Documents.
   i. Use of the premises.
   j. Responsibility for temporary facilities and controls.
   k. Parking availability.
   l. Office, work, and storage areas.
   m. Equipment deliveries and priorities.
   n. First aid.
   o. Security.
   p. Progress cleaning.
   q. Working hours.
3. At the pre-construction meeting, the General Contractor shall submit a schedule of values consisting of a detailed breakdown of the Contract amount showing separate figures for labor and material for each major work item (i.e., tear-off, insulation, membrane, surfacing, metal, asbestos abatement, etc.) The work listed under the various sections and subsections of the Specifications will serve as the format for preparation of the breakdown.
4. The costs employed in making up any of these schedules will be used only for determining the basis of partial payments and will not be considered as fixing a basis for additions to or deductions from the contract price.

C. Preinstallation Conferences: Conduct a preinstallation conference at Project site before each construction activity that requires coordination with other construction.
   1. Attendees: Installer and representatives of manufacturers and fabricators involved in or affected by the installation and its coordination or integration with other materials and installations that have preceded or will follow, shall attend the meeting. Advise Architect of scheduled meeting dates.
   2. Agenda: Review progress of other construction activities and preparations for the particular activity under consideration, including requirements for the following:
      a. Contract Documents.
      b. Options.
      c. Related Change Orders.
      d. Purchases.
      e. Deliveries.
      f. Submittals.
      g. Review of mockups, if any.
      h. Possible conflicts.
      i. Compatibility problems.
      j. Time schedules.
      k. Weather limitations.
      l. Manufacturer's written recommendations.
      m. Warranty requirements.
      n. Compatibility of materials.
      o. Acceptability of substrates.
      p. Space and access limitations.
      q. Regulations of authorities having jurisdiction.
      r. Testing and inspecting requirements.
      s. Protection of construction and personnel.
   3. Record significant conference discussions, agreements, and disagreements.
   4. Do not proceed with installation if the conference cannot be successfully concluded. Initiate whatever actions are necessary to resolve impediments to performance of the Work and reconvene the conference at earliest feasible date.

PART 2 - PRODUCTS (Not Used)

PART 3 - EXECUTION (Not Used)

END OF SECTION 01 31 00

SECTION 01 32 00 - CONSTRUCTION PROGRESS DOCUMENTATION

PART 1 - GENERAL

1.1 RELATED DOCUMENTS

A. Drawings and general provisions of the Contract, including General and Supplementary Conditions and other Division 01 Specification Sections, apply to this Section.

1.2 SUMMARY

A. This Section includes administrative and procedural requirements for documenting the progress of construction during performance of the Work, including the following:
   1. Preliminary Construction Schedule.
   2. Contractor's Construction Schedule.
   3. Submittals Schedule.

B. Related Sections include the following:
   1. Division 01 Section "Payment Procedures" for submitting the Schedule of Values.
   2. Division 01 Section “Project Management and Coordination” for submitting and distributing meeting and conference minutes.
   3. Division 01 Section “Submittal Procedures” for submitting schedules and reports.
   4. Division 01 Section “Quality Requirements” for submitting a schedule of tests and inspections.
   5. Division 01 Section "Closeout Procedures" for submitting photographic negatives as Project Record Documents at Project closeout.

1.3 DEFINITIONS

A. Activity: A discrete part of a project that can be identified for planning, scheduling, monitoring, and controlling the construction project. Activities included in a construction schedule consume time and resources.
   1. Critical activities are activities on the critical path. They must start and finish on the planned early start and early finish times.
   2. Predecessor activity is an activity that must be completed before a given activity can be started.

B. Float: The measure of leeway in starting and completing an activity.
   1. Float time is not for the exclusive use or benefit of either Owner or Contractor, but is a jointly owned, expiring Project resource available to both parties as needed to meet schedule milestones and Contract completion date.
   2. Free float is the amount of time an activity can be delayed without adversely affecting the early start of the following activity.
   3. Total float is the measure of leeway in starting or completing an activity without adversely affecting the planned Project completion date.

C. Major Area: A story of construction, a separate building, or a similar significant construction element.

D. Milestone: A key or critical point in time for reference or measurement.

1.4 SUBMITTALS

A. Submittals Schedule: Submit three (3) copies of schedule. Arrange the following information in a tabular format:
   1. Scheduled date for first submittal.
   2. Specification Section number and title.
   3. Submittal category (action or informational).
   4. Name of subcontractor.
   5. Description of the Work covered.

B. Preliminary Construction Schedule: Submit two (2) printed copies; one a single sheet of reproducible media and one a print.

C. Contractor's Construction Schedule: Submit two (2) printed copies of initial schedule, one a reproducible print and one a blue- or black-line print, large enough to show entire schedule for entire construction period.

D. Field Condition Reports: Submit one (1) copy at time of discovery of differing conditions.

E. Special Reports: Submit one (1) copy at time of unusual event.

1.5 COORDINATION

A. Coordinate preparation and processing of schedules and reports with performance of construction activities and with scheduling and reporting of separate contractors.

B. Coordinate Contractor's Construction Schedule with the Schedule of Values, list of subcontracts, Submittals Schedule, progress reports, payment requests, and other required schedules and reports.
   1. Secure time commitments for performing critical elements of the Work from parties involved.
   2. Coordinate each construction activity in the network with other activities and schedule them in proper sequence.

PART 2 - PRODUCTS

2.1 SUBMITTALS SCHEDULE

A. Preparation: Submit a schedule of submittals, arranged in chronological order by dates required by construction schedule. Include time required for review, resubmittal, ordering, manufacturing, fabrication, and delivery when establishing dates.
   1. Coordinate Submittals Schedule with list of subcontracts, the Schedule of Values, and Contractor's Construction Schedule.
   2. Initial Submittal: Submit concurrently with preliminary bar-chart schedule. Include submittals required during the first 60 days of construction. List those required to maintain orderly progress of the Work and those required early because of long lead time for manufacture or fabrication. Submit within two weeks from Notice to Proceed.
   3. Final Submittal: Submit concurrently with the first complete submittal of Contractor’s Construction Schedule.

2.2 CONTRACTOR'S CONSTRUCTION SCHEDULE, GENERAL

A. Procedures: Comply with procedures contained in AGC's "Construction Planning & Scheduling."

B. Time Frame: Extend schedule from date established for the Notice to Proceed to date of Final Completion.

C. Activities: Treat each story or separate area as a separate numbered activity for each principal element of the Work. Comply with the following:
   1. Activity Duration: Define activities so no activity is longer than twenty (20) days, unless specifically allowed by Architect.
   2. Procurement Activities: Include procurement process activities for long lead items and major items, requiring a cycle of more than 60 days, as separate activities in schedule. Procurement cycle activities include, but are not limited to, submittals, approvals, purchasing, fabrication, and delivery.
   3. Submittal Review Time: Include review and resubmittal times indicated in Division 01 Section "Submittal Procedures" in schedule. Coordinate submittal review times in Contractor's Construction Schedule with Submittals Schedule.
   4. Startup and Testing Time: Include not less than ten (10) days for startup and testing.
   5. Substantial Completion: Indicate completion in advance of date established for Substantial Completion, and allow time for Architect's and Construction Manager's administrative procedures necessary for certification of Substantial Completion.

D. Milestones: Include milestones indicated in the Contract Documents in schedule, including, but not limited to, the Notice to Proceed, Substantial Completion, and Final Completion.

2.3 CONTRACTOR'S CONSTRUCTION SCHEDULE (GANTT CHART)

A. Gantt-Chart Schedule: Submit a comprehensive, fully developed, horizontal Gantt-chart-type, Contractor's Construction Schedule within thirty (30) days of date established for the Notice to Proceed. Base schedule on whatever updating and feedback was received since the start of Project.

B. Preparation: Indicate each significant construction activity separately. Identify first workday of each week with a continuous vertical line.
   1. For construction activities that require 3 months or longer to complete, indicate an estimated completion percentage in twenty (20) percent increments within time bar.

2.4 REPORTS

A. Field Condition Reports: Immediately on discovery of a difference between field conditions and the Contract Documents, prepare a detailed report. Submit with a request for information. Include a detailed description of the differing conditions, together with recommendations for changing the Contract Documents.

PART 3 - EXECUTION

3.1 CONTRACTOR'S CONSTRUCTION SCHEDULE

A. Contractor's Construction Schedule Updating: At monthly intervals, update schedule to reflect actual construction progress and activities. Issue schedule one week before each regularly scheduled progress meeting.

1. Revise schedule immediately after each meeting or other activity where revisions have been recognized or made. Issue updated schedule concurrently with the report of each such meeting.
2. Include a report with updated schedule that indicates every change, including, but not limited to, changes in logic, durations, actual starts and finishes, and activity durations.
3. As the Work progresses, indicate Actual Completion percentage for each activity.

B. Distribution: Distribute copies of approved schedule to Architect, Owner, testing and inspecting agencies, and other parties identified by Contractor with a need-to-know schedule responsibility.
1. Post copies in Project meeting rooms and temporary field offices.
2. When revisions are made, distribute updated schedules to the same parties and post in the same locations. Delete parties from distribution when they have completed their assigned portion of the Work and are no longer involved in performance of construction activities.

END OF SECTION 01 32 00

SECTION 01 33 00 - SUBMITTAL PROCEDURES

PART 1 - GENERAL

1.1 SUMMARY

A. This Section includes administrative and procedural requirements for submitting Shop Drawings, Product Data, Samples, and other miscellaneous submittals.

B. See Division 01 for submitting schedules and reports, including Contractor's Construction Schedule and the Submittals Schedule.

C. See Division 01 for submitting test and inspection reports and Delegated-Design Submittals and for erecting mockups.

D. See Division 01 for submitting warranties Project Record Documents and operation and maintenance manuals.

1.2 DEFINITIONS

A. Action Submittals: Written and graphic information that requires Architect's responsive action.

B. Informational Submittals: Written information that does not require Architect's approval. Submittals may be rejected for not complying with requirements.

1.3 SUBMITTAL PROCEDURES

A. General: The Architect may, with the concurrence of the Owner, furnish to the Contractor versions of contract drawings in electronic form for Contractor's use in preparing submittals. See Paragraph 1.4 and 1.5 on the Contractor’s use of CAD Files

B. Coordination: Coordinate preparation and processing of submittals with performance of construction activities.
   1. Coordinate each submittal with fabrication, purchasing, testing, delivery, other submittals, and related activities that require sequential activity.
   2. Coordinate transmittal of different types of submittals for related parts of the Work so processing will not be delayed because of need to review submittals concurrently for coordination.
      a. Architect reserves the right to withhold action on a submittal requiring coordination with other submittals until related submittals are received.

C. Submittals Schedule: Comply with requirements in Division 01 for list of submittals and time requirements for scheduled performance of related construction activities.

D. Processing Time: Allow enough time for submittal review, including time for resubmittals, as follows. Time for review shall commence on Architect's receipt of submittal.
   1. Initial Review: **Allow 15 work days for initial review of each submittal**. Allow additional time if processing must be delayed to permit coordination with subsequent submittals. Architect will advise Contractor when a submittal being processed must be delayed for coordination.
   2. If intermediate submittal is necessary, process it in same manner as initial submittal.
   3. **Allow 15 work days for processing each resubmittal**.

4. No extension of the Contract Time will be authorized because of failure to transmit submittals enough in advance of the Work to permit processing.

E. Identification: Place a permanent label or title block on each submittal for identification.
1. Indicate name of firm or entity that prepared each submittal on label or title block.
2. Provide a space approximately 4 by 5 inches on label or beside title block to record Contractor's review and approval markings and action taken by Architect.
3. Include the following information on label for processing and recording action taken:
   a. Project name.
   b. Date.
   c. Name and address of Architect.
   d. Name and address of Contractor.
   e. Name and address of subcontractor.
   f. Name and address of supplier.
   g. Name of manufacturer.
   h. Unique identifier, including revision number.
   i. Number and title of appropriate Specification Section.
   j. Drawing number and detail references, as appropriate.
   k. Other necessary identification.

F. Deviations: Highlight, encircle, or otherwise identify deviations from the Contract Documents on submittals.

G. Additional Copies: Unless additional copies are required for final submittal, and unless Architect observes noncompliance with provisions of the Contract Documents, initial submittal may serve as final submittal.
1. Additional copies submitted for maintenance manuals will not be marked with action taken and will be returned.

H. Transmittal: Package each submittal individually and appropriately for transmittal and handling. Transmit each submittal using a transmittal form. Architect will discard submittals received from sources other than Contractor.
1. Include Contractor's certification stating that information submitted complies with requirements of the Contract Documents.
2. Transmittal Form: Use AIA Document G810 or CSI Form 12.1A.
3. If a submittal is delivered to the Architect on digital media such as a CD or DVD, include a transmittal form with the package. If a submittal is sent electronically, include a digital transmittal form with the correspondence.

I. Distribution: Furnish copies of final submittals to manufacturers, subcontractors, suppliers, fabricators, installers, authorities having jurisdiction, and others as necessary for performance of construction activities. Show distribution on transmittal forms.

J. Use for Construction: Use only final submittals with mark indicating action taken by Architect in connection with construction.

1.4 CONTRACTOR'S USE OF ARCHITECT'S CAD FILES

A. General: At Contractor's written request, copies of Architect's CAD files may be provided to Contractor for Contractor's use in connection with Project, subject to the following conditions:

1. The Contract Documents executed or identified in accordance with Subparagraph 1.5.1 of the General Conditions shall prevail in case of an inconsistency with subsequent versions made through manipulatable electronic means involving computers**.**
2. The Contractor shall not transfer or reuse Instruments of Service in electronic or machine readable form without the prior consent of the Architect and a signed Electronic Machine Readable Release Form submitted to the Architect.
3. Sub Contractors and Material Suppliers must communicate through the Contractor for the use of Instruments of Service in Electronic Form.
4. **The ADW Electronic Machine Readable Release Form following this Section must be submitted along with subsequent fees associated with the files as noted on the form prior to the Architect providing the files**.
5. **The request, signed release form and fee must be submitted to allow 5 working days for the Architect to perform this service.**

1.5 CONTRACTOR'S USE OF ENGINEER’S AND CONSULTANT’S CAD FILES

A. General: The request for the Architect’s Engineers and Consultants CAD files shall be at the discretion of the Engineers and Consultants and under the Engineers and Consultants identified conditions.

PART 2 - PRODUCTS

2.1 ACTION SUBMITTALS

A. General: Prepare and submit Action Submittals required by individual Specification Sections.
1. Submit one electronic copy in a digital file format. Digital file submittals must be legible and able to accept digital commenting from industry standard tools such as Adobe Acrobat. Digital file submittals shall not restrict the ability to be printed, the ability to have content copied, or the ability to have pages extracted or added.
2. The General Contractor will be responsible for printing any hard copies of the submittals otherwise required by the Owner, Building Inspector, Fire Marshall, or other reviewing body.

B. Product Data: Collect information into a single submittal for each element of construction and type of product or equipment.
1. If information must be specially prepared for submittal because standard printed data are not suitable for use, submit as Shop Drawings, not as Product Data.
2. Mark each copy of each submittal to show which products and options are applicable.
3. Include the following information, as applicable:
   a. Manufacturer's written recommendations.
   b. Manufacturer's product specifications.
   c. Manufacturer's installation instructions.
   d. Manufacturer's catalog cuts.
   e. Wiring diagrams showing factory-installed wiring.
   f. Printed performance curves.
   g. Operational range diagrams.
   h. Compliance with recognized trade association standards.
   i. Compliance with recognized testing agency standards.

C. Shop Drawings: Prepare Project-specific information, drawn accurately to scale. Do not base Shop Drawings on reproductions of the Contract Documents or standard printed data.
1. Preparation: Include the following information, as applicable:

a. Dimensions.
b. Identification of products.
c. Fabrication and installation drawings.
d. Roughing-in and setting diagrams.
e. Wiring diagrams showing field-installed wiring, including power, signal, and control wiring.
f. Shopwork manufacturing instructions.
g. Templates and patterns.
h. Schedules.
i. Notation of coordination requirements.
j. Notation of dimensions established by field measurement.

2. Wiring Diagrams: Differentiate between manufacturer-installed and field-installed wiring.
3. Sheet Size: Except for templates, patterns, and similar full-size drawings, submit Shop Drawings on sheets at least 8-1/2 by 11 inches but no larger than 30 by 40 inches.

D. Coordination Drawings: Comply with requirements in Division 01.

E. Samples: Prepare physical units of materials or products, including the following:
1. Comply with requirements in Division 01 for mockups.
2. Samples for Initial Selection: Submit manufacturer's color charts consisting of units or sections of units showing the full range of colors, textures, and patterns available.
   a. Submit one full set of available choices where color, pattern, texture, or similar characteristics are required to be selected from manufacturer's product line. Architect will return submittal with options selected.
3. Samples for Verification: Submit full-size units or Samples of size indicated, prepared from the same material to be used for the Work, cured and finished in manner specified, and physically identical with the product proposed for use, and that show full range of color and texture variations expected. Samples include, but are not limited to, partial sections of manufactured or fabricated components; small cuts or containers of materials; complete units of repetitively used materials; swatches showing color, texture, and pattern; color range sets; and components used for independent testing and inspection.
   a. Submit three sets of Samples. Architect will retain two Sample sets; remainder will be returned.
4. Preparation: Mount, display, or package Samples in manner specified to facilitate review of qualities indicated. Prepare Samples to match Architect's sample where so indicated. Attach label on unexposed side.
5. Submit Samples for review of kind, color, pattern, and texture for a final check of these characteristics with other elements and for a comparison of these characteristics between final submittal and actual component as delivered and installed.
6. Disposition: Maintain sets of approved Samples at Project site, available for quality-control comparisons throughout the course of construction activity. Sample sets may be used to determine final acceptance of construction associated with each set.

F. Product Schedule or List: Prepare a written summary indicating types of products required for the Work and their intended location.

G. Delegated-Design Submittal: Comply with requirements in Division 01.

H. Submittals Schedule: Comply with requirements in Division 01.

I. Application for Payment: Comply with requirements in Division 01.

J. Schedule of Values: Comply with requirements in Division 01.

K. Subcontract List: Prepare a written summary identifying individuals or firms proposed for each portion of the Work, including those who are to furnish products or equipment fabricated to a special design. Use CSI Form 1.5A.

2.2 INFORMATIONAL SUBMITTALS

A. General: Prepare and submit Informational Submittals required by other Specification Sections.
   1. Number of Copies: Submit two copies of each submittal, unless otherwise indicated. Architect will not return copies.
   2. Certificates and Certifications: Provide a notarized statement that includes signature of entity responsible for preparing certification. Certificates and certifications shall be signed by an officer or other individual authorized to sign documents on behalf of that entity.
   3. Test and Inspection Reports: Comply with requirements in Division 01.

B. Contractor's Construction Schedule: Comply with requirements in Division 01.

C. Qualification Data: Prepare written information that demonstrates capabilities and experience of firm or person. Include lists of completed projects with project names and addresses, names and addresses of architects and owners, and other information specified.

D. Product Certificates: Prepare written statements on manufacturer's letterhead certifying that product complies with requirements.

E. Welding Certificates: Prepare written certification that welding procedures and personnel comply with requirements. Submit record of Welding Procedure Specification (WPS) and Procedure Qualification Record (PQR) on AWS forms. Include names of firms and personnel certified.

F. Installer Certificates: Prepare written statements on manufacturer's letterhead certifying that Installer complies with requirements and, where required, is authorized for this specific Project.

G. Manufacturer Certificates: Prepare written statements on manufacturer's letterhead certifying that manufacturer complies with requirements. Include evidence of manufacturing experience where required.

H. Material Certificates: Prepare written statements on manufacturer's letterhead certifying that material complies with requirements.

I. Material Test Reports: Prepare reports written by a qualified testing agency, on testing agency's standard form, indicating and interpreting test results of material for compliance with requirements.

J. Compatibility Test Reports: Prepare reports written by a qualified testing agency, on testing agency's standard form, indicating and interpreting results of compatibility tests performed before installation of product. Include written recommendations for primers and substrate preparation needed for adhesion.

K. Field Test Reports: Prepare reports written by a qualified testing agency, on testing agency's standard form, indicating and interpreting results of field tests performed either during

installation of product or after product is installed in its final location, for compliance with requirements.

L. Product Test Reports: Prepare written reports indicating current product produced by manufacturer complies with requirements. Base reports on evaluation of tests performed by manufacturer and witnessed by a qualified testing agency, or on comprehensive tests performed by a qualified testing agency.

M. Research/Evaluation Reports: Prepare written evidence, from a model code organization acceptable to authorities having jurisdiction, that product complies with building code in effect for Project.

N. Maintenance Data: Prepare written and graphic instructions and procedures for operation and normal maintenance of products and equipment. Comply with requirements in Division 1 Section "Closeout Procedures."

O. Design Data: Prepare written and graphic information, including, but not limited to, performance and design criteria, list of applicable codes and regulations, and calculations. Include list of assumptions and other performance and design criteria and a summary of loads. Include load diagrams if applicable. Provide name and version of software, if any, used for calculations. Include page numbers.

P. Manufacturer's Instructions: Prepare written or published information that documents manufacturer's recommendations, guidelines, and procedures for installing or operating a product or equipment. Include name of product and name, address, and telephone number of manufacturer.

Q. Manufacturer's Field Reports: Prepare written information documenting factory-authorized service representative's tests and inspections.

R. Insurance Certificates and Bonds: Prepare written information indicating current status of insurance or bonding coverage. Include name of entity covered by insurance or bond, limits of coverage, amounts of deductibles, if any, and term of the coverage.

S. Construction Photographs: Comply with requirements in Division 1 Section "Construction Progress Documentation."

PART 3 - EXECUTION

3.1 CONTRACTOR'S REVIEW

A. Review each submittal and check for compliance with the Contract Documents. Note corrections and field dimensions. Mark with approval stamp before submitting to Architect.

B. Approval Stamp: Stamp each submittal with a uniform, approval stamp. Include Project name and location, submittal number, Specification Section title and number, name of reviewer, date of Contractor's approval, and statement certifying that submittal has been reviewed, checked, and approved for compliance with the Contract Documents.

3.2 ARCHITECT'S ACTION

A. General: Architect will not review submittals that do not bear Contractor's approval stamp and will return them without action.

B. Action Submittals: Architect will review each submittal, make marks to indicate corrections or modifications required, and return it. Architect will stamp each submittal with an action stamp and will mark stamp appropriately to indicate action taken, as follows:
   1. Reviewed
   2. Revise as noted
   3. Revise and resubmit
   4. Rejected

C. Informational Submittals: Architect will review each submittal and will not return it, or will reject and return it if it does not comply with requirements. Architect will forward each submittal to appropriate party.

D. Submittals not required by the Contract Documents will not be reviewed and may be discarded.

END OF SECTION 01 33 00

adwarchitects
environmentsforlife

architecture planning interiors

ELECTRONIC MACHINE-READABLE FILE RELEASE

At your request, ADW Architects, p.a. (ADW) will provide the Contractor: _____ with electronic machine readable files for your convenience and use in the preparation of documents subject to the following terms and conditions related to the following project:
Project: _____

ADW utilizes electronic machine-readable files that are compatible with MicroStation. The files furnished, if so requested, will be exported to a .dwg format. ADW makes no representation as to the compatibility of these files with your hardware and/or software. The Contractor shall understand that the automated conversion of information and data from the system and format used by ADW to an alternate system or format cannot be accomplished without the introduction of inexactitudes, anomalies and errors, whether inadvertently or otherwise. In the event project documentation provided in electronic machine-readable format is so converted, the Contractor agrees to assume all risks associated therewith and, to the fullest extent permitted by law, to hold harmless and indemnify ADW from and against all claims, liabilities, losses, damages, and costs, including but not limited to attorney's fees, arising therefrom in connection therewith.

Data contained on these electronic machine-readable files is part of ADW's instruments of service and shall not be used by the Contractor or anyone else receiving this data through and from the Contractor for any purpose other than as a convenience in the preparation of documents pertaining to the specific project as indicated on the files furnished. The Contractor recognizes that changes or modifications to ADW's instruments of professional service introduced by anyone other than ADW may result in adverse consequences, which ADW can neither predict nor control. Therefore, and in consideration of ADW's agreement to deliver its instruments of professional service in an electronic machine-readable format, the Contractor agrees, to the fullest extent permitted by law, to hold harmless and indemnify ADW from and against all claims, liabilities, losses, damages, and costs, including but not limited to attorney's fees, arising out of or in any way connected with the modification, misinterpretation, misuse, or reuse by others of the electronic machine-readable information and data provided by ADW under this agreement. The foregoing indemnification applies, without limitation, to any use of the project documentation on other projects, for additions, or for completion by others, excepting only such use as may be authorized, in writing, by ADW.

These electronic or machine-readable files are not Contract Documents. Significant differences may exist between these electronic machine-readable files and corresponding hard copy Contract Documents due to addenda, change orders or other revisions. ADW makes no representation regarding the accuracy or completeness of the electronic or machine-readable files you receive. In the event that a conflict arises between the signed Contract Documents prepared by ADW and the electronic machine-readable files, signed Contract Documents shall govern. The Contractor is responsible for determining if any conflict exists. By your use of these files, you are not relieved of your duty to fully comply with the Contract Documents, including and without limitation, the need to check, confirm and coordinate all dimensions and details, take field measurements, verify field conditions and coordinate your work with that of other Contractors.

Under no circumstances shall delivery of the electronic machine-readable files for use by The Contractor be deemed a sale by ADW and ADW makes no warranties, either express or implied, of merchantability and fitness for any particular purpose. In no event shall ADW Architects be liable for any loss of profit or any consequential damages. Usage by any parties of the data contained in the electronic machine-readable files released shall constitute agreement to these terms. However, for record keeping we request that you sign this agreement, copy it for your files and return the original hard copy to us along with requested files and the required payment for this service.

The cost of providing this service will be $90.00 per requested CADD drawing file payable to:
ADW Architects, Pa
101 West Worthington Avenue, Suite 270
Charlotte, N.C. 28203

(Quantity)____ **Electronic machine readable files @ $90.00 = $_____**

Acknowledged and accepted by:

_____
Company

_____ _____
Authorized Representative **Date**

SECTION 01 40 00 - QUALITY REQUIREMENTS

PART 1 - GENERAL

1.1 RELATED DOCUMENTS

A. Drawings and general provisions of the Contract, including General and Supplementary Conditions and other Division 01 Specification Sections, apply to this Section.

1.2 SUMMARY

A. This Section includes administrative and procedural requirements for quality assurance and quality control.

B. Testing and inspecting services are required to verify compliance with requirements specified or indicated. These services do not relieve Contractor of responsibility for compliance with the Contract Document requirements.
   1. Specific quality-control requirements for individual construction activities are specified in the Sections that specify those activities. Requirements in those Sections may also cover production of standard products.
   2. Specified tests, inspections, and related actions do not limit Contractor's quality-control procedures that facilitate compliance with the Contract Document requirements.
   3. Requirements for Contractor to provide quality-control services required by Architect, Owner, or authorities having jurisdiction are not limited by provisions of this Section.

C. Related Sections include the following:
   1. Division 01 Section “Cutting and Patching” for repair and restoration of construction disturbed by testing and inspecting activities.
   2. Review Divisions 02 through 49 sections for specific test and inspection requirements.

1.3 DEFINITIONS

A. Quality-Assurance Services: Activities, actions, and procedures performed before and during execution of the Work to guard against defects and deficiencies and ensure that proposed construction complies with requirements.

B. Quality-Control Services: Tests, inspections, procedures, and related actions during and after execution of the Work to evaluate that completed construction complies with requirements. Services do not include contract enforcement activities performed by Architect.

C. Mockups: Full-size, physical example assemblies to illustrate finishes and materials. Mockups are used to verify selections made under Sample submittals, to demonstrate aesthetic effects and, where indicated, qualities of materials and execution, and to review construction, coordination, testing, or operation; they are not Samples.

D. Testing Agency: An entity engaged to perform specific tests, inspections, or both. Testing laboratory shall mean the same as testing agency.

1.4 DELEGATED DESIGN

A. Performance and Design Criteria: Where professional design services or certifications by a design professional are specifically required of Contractor by the Contract Documents, provide products and systems complying with specific performance and design criteria indicated.
   1. If criteria indicated are not sufficient to perform services or certification required, submit a written request for additional information to Architect.

1.5 SUBMITTALS

A. Delegated-Design Submittal: In addition to Shop Drawings, Product Data, and other required submittals, submit a statement, signed and sealed by the responsible design professional, for each product and system specifically assigned to Contractor to be designed or certified by a design professional, indicating that the products and systems are in compliance with performance and design criteria indicated. Include list of codes, loads, and other factors used in performing these services.

B. Permits, Licenses, and Certificates: For Owner's records, submit copies of permits, licenses, certifications, inspection reports, releases, jurisdictional settlements, notices, receipts for fee payments, judgments, correspondence, records, and similar documents, established for compliance with standards and regulations bearing on performance of the Work.

C. Not later than 30 calendar days after the Notice to Proceed date, the contractor shall furnish to the Architect for review a complete list of all subcontractors and all material and equipment to be used in the Project showing the manufacturer, supplier, trade name, and model number of each. Where the specification allows a choice, the list shall indicate the Contractor’s choice. This list shall follow the sequence of the sections of the specifications.

1.6 QUALITY ASSURANCE

A. Professional Engineer Qualifications: A professional engineer who is legally qualified to practice in jurisdiction where Project is located and who is experienced in providing engineering services of the kind indicated. Engineering services are defined as those performed for installations of the system, assembly, or product that are similar to those indicated for this Project in material, design, and extent.

B. Specialists: Certain sections of the Specifications require that specific construction activities shall be performed by entities who are recognized experts in those operations. Specialists shall satisfy qualification requirements indicated and shall be engaged for the activities indicated.

C. Testing Agency Qualifications: An agency with the experience and capability to conduct testing and inspecting indicated, as documented by ASTM E 548, and that specializes in types of tests and inspections to be performed.

D. Fabricator Qualifications: A firm experienced in producing products similar to those indicated for this Project and with a record of successful in-service performance, as well as sufficient production capacity to produce required units.

E. Factory-Authorized Service Representative Qualifications: An authorized representative of manufacturer who is trained and approved by manufacturer to inspect installation of manufacturer's products that are similar in material, design, and extent to those indicated for this Project.

F. Installer Qualifications: A firm or individual experienced in installing, erecting, or assembling work similar in material, design, and extent to that indicated for this Project, whose work has resulted in construction with a record of successful in-service performance.

G. Mockups: Before installing portions of the Work requiring mockups, build mockups for each form of construction and finish required to comply with the following requirements, using materials indicated for the completed Work:
   1. Build mockups in location and of size indicated or, if not indicated, as directed by Architect.
   2. Notify Architect seven days in advance of dates and times when mockups will be constructed.
   3. Demonstrate the proposed range of aesthetic effects and workmanship.
   4. Obtain Architect's approval of mockups before starting work, fabrication, or construction.
   5. Maintain mockups during construction in an undisturbed condition as a standard for judging the completed Work.
   6. Demolish and remove mockups when directed, unless otherwise indicated.

1.7 QUALITY CONTROL

A. Owner Responsibilities: Where quality-control services are indicated as Owner's responsibility, Owner will engage a qualified testing agency to perform these services.
   1. Owner will furnish Contractor with names, addresses, and telephone numbers of testing agencies engaged and a description of the types of testing and inspecting they are engaged to perform.
   2. Costs for retesting and reinspecting construction that replaces or is necessitated by work that failed to comply with the Contract Documents will be charged to Contractor.

B. Special Tests and Inspections: Owner will engage a testing agency to conduct special tests and inspections required by authorities having jurisdiction as the responsibility of Owner.
   1. Testing agency will notify Architect and Contractor promptly of irregularities and deficiencies observed in the Work during performance of its services.
   2. Testing agency will submit a certified written report of each test, inspection, and similar quality-control service to Architect with copy to Contractor and to authorities having jurisdiction.
   3. Testing agency will submit a final report of special tests and inspections at Substantial Completion, which includes a list of unresolved deficiencies.
   4. Testing agency will interpret tests and inspections and state in each report whether tested and inspected work complies with or deviates from the Contract Documents.
   5. Testing agency will retest and reinspect corrected work.

C. Manufacturer's Field Services: Where indicated, engage a factory-authorized service representative to inspect field-assembled components and equipment installation, including service connections. Report results in writing.

D. Retesting/Reinspecting: Regardless of whether original tests or inspections were Contractor's responsibility, provide quality-control services, including retesting and reinspecting, for construction that revised or replaced Work that failed to comply with requirements established by the Contract Documents.

E. Associated Services: Cooperate with agencies performing required tests, inspections, and similar quality-control services, and provide reasonable auxiliary services as requested. Notify agency sufficiently in advance of operations to permit assignment of personnel. Provide the following:

1. Access to the Work.
2. Incidental labor and facilities necessary to facilitate tests and inspections.
3. Adequate quantities of representative samples of materials that require testing and inspecting. Assist agency in obtaining samples.
4. Facilities for storage and field-curing of test samples.
5. Preliminary design mix proposed for use for material mixes that require control by testing agency.
6. Security and protection for samples and for testing and inspecting equipment at Project site.

F. Coordination: Coordinate sequence of activities to accommodate required quality-assurance and quality-control services with a minimum of delay and to avoid necessity of removing and replacing construction to accommodate testing and inspecting.
   1. Schedule times for tests, inspections, obtaining samples, and similar activities.
   2. Notify testing agency and Architect at least 48 hours in advance of time required to perform testing services.
   3. Notify testing agency and Architect at least 72 hours in advance to inspect concrete reinforcing placement prior to pouring concrete or grouting masonry.

PART 2 - PRODUCTS (Not Used)

PART 3 - EXECUTION

3.1 REPAIR AND PROTECTION

A. General: On completion of testing, inspecting, sample taking, and similar services, repair damaged construction and restore substrates and finishes.
   1. Comply with the Contract Document requirements for Division 01 Section "Cutting and Patching."

B. Protect construction exposed by or for quality-control service activities.

C. Repair and protection are Contractor's responsibility, regardless of the assignment of responsibility for quality-control services.

END OF SECTION 01 40 00

SECTION 01 42 00 - REFERENCES

PART 1 - GENERAL

1.1 RELATED DOCUMENTS

A. Drawings and general provisions of the Contract, including General and Supplementary Conditions and other Division 01 Specification Sections, apply to this Section.

1.2 DEFINITIONS

A. General: Basic Contract definitions are included in the Conditions of the Contract.

B. "Approved": When used to convey Architect's action on Contractor's submittals, applications, and requests, "approved" is limited to Architect's duties and responsibilities as stated in the Conditions of the Contract.

C. "Directed": A command or instruction by Architect. Other terms including "requested," "authorized," "selected," "approved," "required," and "permitted" have the same meaning as "directed."

D. "Indicated": Requirements expressed by graphic representations or in written form on Drawings, in Specifications, and in other Contract Documents. Other terms including "shown," "noted," "scheduled," and "specified" have the same meaning as "indicated."

E. "Regulations": Laws, ordinances, statutes, and lawful orders issued by authorities having jurisdiction, and rules, conventions, and agreements within the construction industry that control performance of the Work.

F. "Furnish": Supply and deliver to Project site, ready for unloading, unpacking, assembly, installation, and similar operations.

G. "Install": Operations at Project site including unloading, temporarily storing, unpacking, assembling, erecting, placing, anchoring, applying, working to dimension, finishing, curing, protecting, cleaning, and similar operations.

H. "Provide": Furnish and install, complete and ready for the intended use.

I. "Installer": Contractor or another entity engaged by Contractor as an employee, Subcontractor, or Sub-subcontractor, to perform a particular construction operation, including installation, erection, application, and similar operations.

1. Using a term such as "carpentry" does not imply that certain construction activities must be performed by accredited or unionized individuals of a corresponding generic name, such as "carpenter." It also does not imply that requirements specified apply exclusively to tradespeople of the corresponding generic name.

J. "Experienced": When used with an entity, "experienced" means having successfully completed a minimum of five previous projects similar in size and scope to this Project; being familiar with special requirements indicated; and having complied with requirements of authorities having jurisdiction.

K. "Project Site": Space available for performing construction activities. The extent of Project site is shown on Drawings and may or may not be identical with the description of the land on which Project is to be built.

1.3 INDUSTRY STANDARDS

A. Applicability of Standards: Unless the Contract Documents include more stringent requirements, applicable construction industry standards have the same force and effect as if bound or copied directly into the Contract Documents to the extent referenced. Such standards are made a part of the Contract Documents by reference.

B. Publication Dates: Comply with standards in effect as of date of the Contract Documents, unless otherwise indicated.

C. Conflicting Requirements: If compliance with two or more standards is specified and the standards establish different or conflicting requirements for minimum quantities or quality levels, comply with the most stringent requirement. Refer uncertainties and requirements that are different, but apparently equal, to Architect for a decision before proceeding.

1. Minimum Quantity or Quality Levels: The quantity or quality level shown or specified shall be the minimum provided or performed. The actual installation may comply exactly with the minimum quantity or quality specified, or it may exceed the minimum within reasonable limits. To comply with these requirements, indicated numeric values are minimum or maximum, as appropriate, for the context of requirements. Refer uncertainties to Architect for a decision before proceeding.

D. Abbreviations and Acronyms for Standards and Regulations: Where abbreviations and acronyms are used in Specifications or other Contract Documents, they shall mean the recognized name of the standards and regulations in the following list. Names, telephone numbers, and Web site addresses are subject to change and are believed to be accurate and up-to-date as of the date of the Contract Documents.

PRIVATE tbl1@dom1

ADAAG	Americans with Disabilities Act (ADA)	
	Accessibility Guidelines for Buildings and Facilities	
	Available from Access Board	(800) 872-2253
	www.access-board.gov	(202) 272-5434
CFR	Code of Federal Regulations	
	Available from Government Printing Office	(888) 293-6498
	www.access.gpo.gov/nara/cfr	(202) 512-1530
FED-STD	Federal Standard (See FS)	
FS	Federal Specification	
	Available from National Institute of Building Sciences	(202) 289-7800
	www.nibs.org	

1.4 ABBREVIATIONS AND ACRONYMS

A. Industry Organizations: Where abbreviations and acronyms are used in Specifications or other Contract Documents, they shall mean the recognized name of the entities in the following list. Names, telephone numbers, and Web site addresses are subject to change and are believed to be accurate and up-to-date as of the date of the Contract Documents.

PRIVATE tbl2@dom1

AA	Aluminum Association, Inc. (The)	(202) 862-5100
	www.aluminum.org	

AAADM	American Association of Automatic Door Manufacturers www.aaadm.com	(216) 241-7333
AAMA	American Architectural Manufacturers Association www.aamanet.org	(847) 303-5664
ACI	American Concrete Institute/ACI International www.aci-int.org	(248) 848-3700
ACPA	American Concrete Pipe Association www.concrete-pipe.org	(972) 506-7216
AF&PA	American Forest & Paper Association www.afandpa.org	(800) 878-8878 (202) 463-2700
AGC	Associated General Contractors of America (The) www.agc.org	(703) 548-3118
AHA	American Hardboard Association www.ahardbd.org	(847) 934-8800
AI	Asphalt Institute www.asphaltinstitute.org	(859) 288-4960
AIA	American Institute of Architects (The) www.e-architect.com	(202) 626-7300
AISC	American Institute of Steel Construction www.aisc.org	(800) 644-2400 (312) 670-2400
AISI	American Iron and Steel Institute www.steel.org	(202) 452-7100
AITC	American Institute of Timber Construction www.aitc-glulam.org	(303) 792-9559
ALCA	Associated Landscape Contractors of America www.alca.org	(800) 395-2522 (703) 736-9666
ALSC	American Lumber Standard Committee	(301) 972-1700
ANLA	American Nursery & Landscape Association www.anla.org	(202) 789-2900
ANSI	American National Standards Institute www.ansi.org	(202) 293-8020
APA	APA - The Engineered Wood Association www.apawood.org	(253) 565-6600
APA	Architectural Precast Association www.archprecast.org	(941) 454-6989
ASCE	American Society of Civil Engineers www.asce.org	(800) 548-2723 (703) 295-6300
ASHRAE	American Society of Heating, Refrigerating and Air-Conditioning Engineers www.ashrae.org	(800) 527-4723 (404) 636-8400
ASME	ASME International (The American Society of Mechanical Engineers International) www.asme.org	(800) 843-2763 (212) 591-7722
ASTM	American Society for Testing and Materials www.astm.org	(610) 832-9585
AWI	Architectural Woodwork Institute www.awinet.org	(800) 449-8811 (703) 733-0600
AWPA	American Wood-Preservers' Association www.awpa.com	(817) 326-6300
AWS	American Welding Society www.aws.org	(800) 443-9353 (305) 443-9353
BHMA	Builders Hardware Manufacturers Association www.buildershardware.com	(212) 297-2122
BIA	Brick Industry Association (The)	(703) 620-0010

	www.bia.org	
CCFSS	Center for Cold-Formed Steel Structures www.umr.edu/~ccfss	(573) 341-4471
CDA	Copper Development Association Inc. www.copper.org	(800) 232-3282 (212) 251-7200
CIMA	Cellulose Insulation Manufacturers Association 堀 掇ẃ ▯▯Ĥ晉 閔A혈F□g	(888) 881-2462 (937) 222-2462
CISCA	Ceilings & Interior Systems Construction Association www.cisca.org	(630) 584-1919
CISPI	Cast Iron Soil Pipe Institute www.cispi.org	(423) 892-0137
CLFMI	Chain Link Fence Manufacturers Institute www.chainlinkinfo.org	(301) 596-2583
CPA	Composite Panel Association (Formerly: National Particleboard Association) www.pbmdf.com	(301) 670-0604
CPPA	Corrugated Polyethylene Pipe Association www.cppa-info.org	(800) 510-2772 (202) 462-9607
CRSI	Concrete Reinforcing Steel Institute www.crsi.org	(847) 517-1200
CSI	Construction Specifications Institute (The) www.csinet.org	(800) 689-2900 (703) 684-0300
DHI	Door and Hardware Institute www.dhi.org	(703) 222-2010
EIMA	EIFS Industry Members Association www.eifsfacts.com	(800) 294-3462 (770) 968-7945
EJMA	Expansion Joint Manufacturers Association, Inc. www.ejma.org	(914) 332-0040
FMG (FM)	FM Global (Formerly: FM - Factory Mutual System) www.fmglobal.com	(401) 275-3000
GA	Gypsum Association www.gypsum.org	(202) 289-5440
GANA	Glass Association of North America (Formerly: FGMA - Flat Glass Marketing Association) www.glasswebsite.com/gana	(785) 271-0208
HPVA	Hardwood Plywood & Veneer Association www.hpva.org	(703) 435-2900
IGCC	Insulating Glass Certification Council www.igcc.org	(315) 646-2234
KCMA	Kitchen Cabinet Manufacturers Association www.kcma.org	(703) 264-1690
LGSI	Light Gage Structural Institute www.loseke.com	(972) 370-0967
LMA	Laminating Materials Association (Formerly: ALA - American Laminators Association) www.lma.org	(201) 664-2700
MBMA	Metal Building Manufacturers Association www.mbma.com	(216) 241-7333
MCA	Metal Construction Association www.metalconstruction.org	(312) 201-0193
MFMA	Metal Framing Manufacturers Association	(312) 644-6610
MIA	Marble Institute of America www.marble-institute.com	(614) 228-6194
NAAMM	National Association of Architectural Metal Manufacturers	(312) 332-0405

	www.naamm.org	
NAIMA	North American Insulation Manufacturers Association (The) www.naima.org	(703) 684-0084
NCMA	National Concrete Masonry Association www.ncma.org	(703) 713-1900
NCPI	National Clay Pipe Institute www.ncpi.org	(414) 248-9094
NECA	National Electrical Contractors Association www.necanet.org	(301) 657-3110
NEMA	National Electrical Manufacturers Association www.nema.org	(703) 841-3200
NETA	InterNational Electrical Testing Association www.netaworld.org	(303) 697-8441
NFPA	National Fire Protection Association www.nfpa.org	(800) 344-3555 (617) 770-3000
NFRC	National Fenestration Rating Council www.nfrc.org	(301) 589-6372
NGA	National Glass Association www.glass.org	(703) 442-4890
NHLA	National Hardwood Lumber Association www.natlhardwood.org	(800) 933-0318 (901) 377-1818
NLGA	National Lumber Grades Authority www.nlga.org	(604) 524-2393
NPA	National Particleboard Association (See CPA)	
NRCA	National Roofing Contractors Association www.nrca.net	(800) 323-9545 (847) 299-9070
NRMCA	National Ready Mixed Concrete Association www.nrmca.org	(888) 846-7622 (301) 587-1400
NSA	National Stone Association www.aggregates.org	(800) 342-1415 (703) 525-8788
NTMA	National Terrazzo and Mosaic Association, Inc. www.ntma.com	(800) 323-9736 (703) 779-1022
NWWDA	National Wood Window and Door Association (See WDMA)	
PCI	Precast/Prestressed Concrete Institute www.pci.org	(312) 786-0300
PDCA	Painting and Decorating Contractors of America www.pdca.com	(800) 332-7322 (703) 359-0826
PDI	Plumbing & Drainage Institute www.pdionline.org	(800) 589-8956 (508) 230-3516
RCSC	Research Council on Structural Connections www.boltcouncil.org	(800) 644-2400 (312) 670-2400
RMA	Rubber Manufacturers Association www.rma.org	(800) 220-7620 (202) 682-4800
SDI	Steel Deck Institute www.sdi.org	(847) 462-1930
SDI	Steel Door Institute www.steeldoor.org	(440) 899-0010
SGCC	Safety Glazing Certification Council www.sgcc.org	(315) 646-2234
SIGMA	Sealed Insulating Glass Manufacturers Association www.sigmaonline.org/sigma	(312) 644-6610
SJI	Steel Joist Institute	(843) 626-1995

	www.steeljoist.org	
SMACNA	Sheet Metal and Air Conditioning Contractors' National Association www.smacna.org	(703) 803-2980
SPFA	Spray Polyurethane Foam Alliance (Formerly: SPI/SPFD - The Society of the Plastics Industry, Inc.; Spray Polyurethane Foam Division) www.sprayfoam.org	(800) 523-6154
SPI	The Society of the Plastics Industry www.plasticsindustry.org	(202) 974-5200
SPIB	Southern Pine Inspection Bureau (The) www.spib.org	(850) 434-2611
SPRI	SPRI (Single Ply Roofing Institute) www.spri.org	(781) 444-0242
SSINA	Specialty Steel Industry of North America www.ssina.com	(800) 982-0355 (202) 342-8630
SSMA	Steel Stud Manufacturers Association (Formerly: ML/SFA - Metal Lath/Steel Framing Association) www.ssma.com	(312) 456-5590
SSPC	SSPC: The Society for Protective Coatings www.sspc.org	(800) 837-8303 (412) 281-2331
SWI	Steel Window Institute www.steelwindows.com	(216) 241-7333
TCA	Tile Council of America, Inc. www.tileusa.com	(864) 646-8453
TPI	Truss Plate Institute	(608) 833-5900
UL	Underwriters Laboratories Inc. www.ul.com	(800) 704-4050 (847) 272-8800
WDMA	Window & Door Manufacturers Association (Formerly: NWWDA - National Wood Window and Door Association) www.wdma.com	(800) 223-2301 (847) 299-5200
WMMPA	Wood Moulding & Millwork Producers Association www.wmmpa.com	(800) 550-7889 (530) 661-9591
WWPA	Western Wood Products Association www.wwpa.org	(503) 224-3930

B. Code Agencies: Where abbreviations and acronyms are used in Specifications or other Contract Documents, they shall mean the recognized name of the entities in the following list. Names, telephone numbers, and Web site addresses are subject to change and are believed to be accurate and up-to-date as of the date of the Contract Documents.

PRIVATE tbl3

BOCA	BOCA International, Inc. www.bocai.org	(708) 799-2300
IAPMO	International Association of Plumbing and Mechanical Officials (The) www.iapmo.org	(909) 595-8449
ICBO	International Conference of Building Officials www.icbo.org	(800) 284-4406 (562) 699-0541
ICC	International Code Council (Formerly: CABO - Council of American Building Officials) www.intlcode.org	(703) 931-4533
SBCCI	Southern Building Code Congress International, Inc. www.sbcci.org	(205) 591-1853

C. Federal Government Agencies: Where abbreviations and acronyms are used in Specifications or other Contract Documents, they shall mean the recognized name of the entities in the following list. Names, telephone numbers, and Web site addresses are subject to change and are believed to be accurate and up-to-date as of the date of the Contract Documents.

PRIVATE tbl4@dom1

CPSC	Consumer Product Safety Commission www.cpsc.gov	(800) 638-2772 (301) 504-0990
EPA	Environmental Protection Agency www.epa.gov	(202) 260-2090
OSHA	Occupational Safety & Health Administration www.osha.gov	(202) 693-1999
USPS	Postal Service www.usps.com	(202) 268-2000

PART 2 - PRODUCTS (Not Used)

PART 3 - EXECUTION (Not Used)

END OF SECTION 01 42 00

SECTION 01 45 29 - TESTING LABORATORY SERVICES

PART 1 - GENERAL

1.01 SCOPE:

A. The Owner will employ and pay for the services of an independent testing laboratory to perform specified testing.
   1. Contractor shall cooperate with laboratory to facilitate the execution of its required services.
   2. The Contractor shall be fully responsible for seeing that all materials meet the Project requirements. Failure of the Architect or testing laboratory to detect defective work, workmanship, or materials shall in no way prevent rejection and the Contractor taking approved corrective action when such defects are discovered. The Architect shall not be obligated to make final acceptance.

1.02 LABORATORY DUTIES:

A. Cooperate with Architect and Contractor; provide qualified personnel.

B. Perform specified inspections, sampling and testing of materials and methods of construction. Comply with specified standards and ascertain compliance of materials with requirements of Contract Documents.

C. Promptly notify Architect and Contractor of observed irregularities or deficiencies of the Work or products.
   1. Promptly submit written report of each test and inspection; one copy each to the Architect, Owner, Contractor, and one copy to Record Documents file. Each report shall, at a minimum, include:
      a. Date issued.
      b. Project title and number.
      c. Testing laboratory name, address and telephone number.
      d. Name and signature of laboratory inspector.
      e. Date and time of sampling or inspection.
      f. Record of temperature and weather conditions.
      g. Date of test.
      h. Identification of product and specification section.
      i. Location of sample or test in the Project.
      j. Type of inspection or test.
      k. Results of tests and compliance with Contract Documents.
      l. Interpretations of test results.
   2. Perform additional tests as required by the Architect or the Owner.

1.03 LIMITATIONS OF AUTHORITY OF TESTING LABORATORY:

A. Laboratory
   1. Release, revoke, alter or enlarge on requirements of the Contract Documents.
   2. Approve or accept any portion of the Work.
   3. Perform any duties of the Contractor.
   4. Give instruction to the Contractor’s workman in the field. All contact shall be with the Architect (or his representative) and the Contractor’s Project Manager.

1.04 CONTRACTOR’S RESPONSIBILITIES:

A. Cooperate with laboratory personnel, provide access to Work, to manufacturer's operations.

B. Secure and deliver to the laboratory, adequate quantities of representational samples of materials proposed to be used and which require testing.

C. Provide to the laboratory the preliminary design mix proposed to be used for concrete, and other materials mixes which require control by the testing laboratory.

D. Furnish copies of products test reports as required.

E. Furnish incidental labor and facilities:
   1. To provide access to Work to be tested.
   2. To obtain and handle samples at the Project site or at the source of the project to be tested.
   3. To facilitate inspections and tests.
   4. For storage and curing of test samples.

F. Notify laboratory sufficiently in advance of operations to allow for laboratory assignment of personnel and scheduling of tests. When tests or inspections cannot be performed after such notice, reimburse Owner for laboratory personnel and travel expenses incurred due to Contractor's negligence. The contractor shall reimburse the owner if an inspection fails for a second time, the second test and any subsequent tests shall be paid for by the GC.

G. The Contractor may for his own convenience, employ and pay for a separate, equally qualified independent testing laboratory to perform additional inspections, sampling and testing. This shall be done with the understanding that:
   1. The additional testing shall be accomplished in accordance with the General Conditions;
   2. That the finds of such additional inspections, samplings, and testing shall in no way be binding upon the Owner and the Architect;
   3. That any such additional inspections, samplings and testing shall be performed at no additional cost to the Owner.

PART 2 - PRODUCTS

NOT APPLICABLE

PART 3 - EXECUTION

NOT APPLICABLE

END OF SECTION 01 45 29

SECTION 01 50 00 - TEMPORARY FACILITIES AND CONTROLS

PART 1 - GENERAL

1.1 SUMMARY

A. This Section includes requirements for temporary facilities and controls, including temporary utilities, support facilities, and security and protection facilities.

B. See Division 01 for progress cleaning requirements.

1.2 DEFINITIONS

A. Permanent Enclosure: As determined by Architect, permanent or temporary roofing is complete, insulated, and weathertight; exterior walls are insulated and weathertight; and all openings are closed with permanent construction or substantial temporary closures.

1.3 USE CHARGES

A. General: Cost or use charges for temporary facilities are not chargeable to Owner or Architect and shall be included in the Contract Sum. Allow other entities to use temporary services and facilities without cost, including, but not limited to, Owner's construction forces, occupants of testing and inspecting agencies and personnel of authorities having jurisdiction.

B. Sewer Service: Pay sewer service use charges for sewer usage, by all parties engaged in construction, at Project site.

C. Water Service: Pay water service use charges, whether metered or otherwise, for water used by all entities engaged in construction activities at Project site. Water usage from the fire hydrant on site is not permitted.

D. Electric Power Service: Pay electric power service use charges, whether metered or otherwise, for electricity used by all entities engaged in construction activities at Project site.

1.4 SUBMITTALS

A. Temporary Utility Reports: Submit reports of tests, inspections, meter readings, and similar procedures performed on temporary utilities.

1.5 QUALITY ASSURANCE

A. Standards: Comply with ANSI A10.6, NECA's "Temporary Electrical Facilities," and NFPA 241.
   1. Electric Service: Comply with NECA, NEMA, and UL standards and regulations for temporary electric service. Install service to comply with NFPA 70.

B. Tests and Inspections: Arrange for authorities having jurisdiction to test and inspect each temporary utility before use. Obtain required certifications and permits.

1.6 PROJECT CONDITIONS

A. Temporary Utilities: At earliest feasible time, when acceptable to Owner, change over from use of temporary service to use of permanent service.
   1. Temporary Use of Permanent Facilities: Installer of each permanent service shall assume responsibility for operation, maintenance, and protection of each permanent service

during its use as a construction facility before Owner's acceptance, regardless of previously assigned responsibilities.

B. Conditions of Use: The following conditions apply to use of temporary services and facilities by all parties engaged in the Work:
   1. Keep temporary services and facilities clean and neat.
   2. Relocate temporary services and facilities as required by progress of the Work.

C. Parking and Traffic Control: Contractor shall be responsible for obtaining and erecting street/parking lot signage as necessary to divert traffic away from staging areas, etc. Contractor is to coordinate signage requirements with the City and Architect. All associated costs are to be borne by the Contractor. Contractor shall provide area for parking for subcontractors, Architect and Owner representatives.

PART 2 - PRODUCTS

2.1 MATERIALS

A. General: Provide new materials. Undamaged, previously used materials in serviceable condition may be used if approved by Architect. Provide materials suitable for use intended.

B. Pavement: Comply with Division 32.

C. Chain-Link Fencing: Minimum 2-inch, 0.148-inch- thick, galvanized steel, chain-link fabric fencing; minimum 6 feet high with galvanized steel pipe posts; minimum 2-3/8-inch- OD line posts and 2-7/8-inch- OD corner and pull posts, with 1-5/8-inch- OD top rails, with galvanized barbed-wire top strand.

D. Portable Chain-Link Fencing: Minimum 2-inch 9-gage, galvanized steel, chain-link fabric fencing; minimum 6 feet high with galvanized steel pipe posts; minimum 2-3/8-inch- OD line posts and 2-7/8-inch- OD corner and pull posts, with 1-5/8-inch- OD top and bottom rails. Provide concrete bases for supporting posts.

E. Wood Enclosure Fence: Plywood, 6 feet high, framed with four 2-by-4-inch rails, with preservative-treated wood posts spaced not more than 8 feet apart.

F. Lumber and Plywood: Comply with requirements in Division 06 Section "General Carpentry."

G. Roofing: Standard-weight, mineral-surfaced, asphalt shingles or asphalt-impregnated and -coated, mineral-surfaced, roll-roofing sheet.

H. Gypsum Board: Minimum 1/2 inch thick by 48 inches wide by maximum available lengths; regular-type panels with tapered edges. Comply with ASTM C 36.

I. Tarpaulins: Fire-resistive labeled with flame-spread rating of 15 or less.

J. Insulation: Unfaced mineral-fiber blanket, manufactured from glass, slag wool, or rock wool; with maximum flame-spread and smoke-developed indices of 25 and 50, respectively.

K. Paint: Comply with requirements in Division 9 Section "Painting."

L. Water: Potable.

2.2 EQUIPMENT

A. Field Offices: Prefabricated, mobile units, or job-built construction with lockable entrances, operable windows, and serviceable finishes; heated and air conditioned; on foundations adequate for normal loading.

B. Fire Extinguishers: Hand carried, portable, UL rated. Provide class and extinguishing agent as indicated or a combination of extinguishers of NFPA-recommended classes for exposures.
   1. Comply with NFPA 10 and NFPA 241 for classification, extinguishing agent, and size required by location and class of fire exposure.

C. Self-Contained Toilet Units: Single-occupant units of chemical, aerated recirculation, or combustion type; vented; fully enclosed with a glass-fiber-reinforced polyester shell or similar nonabsorbent material.

D. Drinking-Water Fixtures: Containerized, tap-dispenser, bottled-water, drinking-water units, including paper cup supply.
   1. Where power is accessible, provide electric water coolers to maintain dispensed water temperature at 45 to 55 deg F.

E. Heating Equipment: Unless Owner authorizes use of permanent heating system, provide vented, self-contained, liquid-propane-gas or fuel-oil heaters with individual space thermostatic control.
   1. Use of gasoline-burning space heaters, open-flame heaters, or salamander-type heating units is prohibited.
   2. Heating Units: Listed and labeled, by a testing agency acceptable to authorities having jurisdiction, and marked for intended use for type of fuel being consumed.

F. Electrical Outlets: Properly configured, NEMA-polarized outlets to prevent insertion of 110- to 120-V plugs into higher-voltage outlets; equipped with ground-fault circuit interrupters, reset button, and pilot light.

G. Power Distribution System Circuits: Where permitted and overhead and exposed for surveillance, wiring circuits, not exceeding 125-V ac, 20-A rating, and lighting circuits may be nonmetallic sheathed cable.

PART 3 - EXECUTION

3.1 INSTALLATION, GENERAL

A. Locate facilities where they will serve Project adequately and result in minimum interference with performance of the Work. Relocate and modify facilities as required.

B. Provide each facility ready for use when needed to avoid delay. Maintain and modify as required. Do not remove until facilities are no longer needed or are replaced by authorized use of completed permanent facilities.

3.2 TEMPORARY UTILITY INSTALLATION

A. General: Engage appropriate local utility company to install temporary service. Where utility company provides only part of the service, provide the remainder with matching, compatible materials and equipment. Comply with utility company recommendations.
   1. Provide adequate capacity at each stage of construction. Before temporary utility is available, provide trucked-in services.
   2. Obtain easements to bring temporary utilities to Project site where Owner's easements cannot be used for that purpose.

B. Sewers and Drainage: If sewers are available, provide temporary connections to remove effluent that can be discharged lawfully. If sewers are not available or cannot be used, provide drainage ditches, dry wells, stabilization ponds, and similar facilities. If neither sewers nor drainage facilities can be lawfully used for discharge of effluent, provide containers to remove and dispose of effluent off-site in a lawful manner.
   1. Filter out excessive soil, construction debris, chemicals, oils, and similar contaminants that might clog sewers or pollute waterways before discharge.
   2. Connect temporary sewers to municipal system as directed by sewer department officials.
   3. Maintain temporary sewers and drainage facilities in a clean, sanitary condition. After heavy use, restore normal conditions promptly.
   4. Provide temporary filter beds, settlement tanks, separators, and similar devices to purify effluent to levels acceptable to authorities having jurisdiction.

C. Water Service: Install water service and distribution piping in sizes and pressures adequate for construction until permanent water service is in use. Sterilize temporary water piping before use.
   1. Provide rubber hoses as necessary to serve Project site.

D. Sanitary Facilities: Provide temporary toilets, wash facilities, and drinking-water fixtures. Comply with regulations and health codes for type, number, location, operation, and maintenance of fixtures and facilities. Facilities will be located at sites approved by Owner.
   1. Disposable Supplies: Provide toilet tissue, paper towels, paper cups, and similar disposable materials for each facility. Maintain adequate supply. Provide covered waste containers for disposal of used material.
   2. Toilets: Install self-contained toilet units. Shield toilets to ensure privacy.
   3. Drinking-Water Facilities: Provide bottled-water, drinking-water units.

E. Heating and Cooling: Provide temporary heating and cooling required by construction activities for curing or drying of completed installations or for protecting installed construction from adverse effects of low temperatures or high humidity. Select equipment from that specified that will not have a harmful effect on completed installations or elements being installed.
   1. Maintain a minimum temperature of 50 deg F in permanently enclosed portions of building for normal construction activities, and 65 deg F for finishing activities and areas where finished Work has been installed.

F. Ventilation and Humidity Control: Provide temporary ventilation required by construction activities for curing or drying of completed installations or for protecting installed construction from adverse effects of high humidity. Select equipment from that specified that will not have a harmful effect on completed installations or elements being installed. Coordinate ventilation requirements to produce ambient condition required and minimize energy consumption.

G. Electric Power Service: Provide weatherproof, grounded electric power service and distribution system of sufficient size, capacity, and power characteristics during construction period. Include meters, transformers, overload-protected disconnecting means, automatic ground-fault interrupters, and main distribution switchgear.
   1. Install electric power service underground, unless overhead service must be used.
   2. Install power distribution wiring overhead and rise vertically where least exposed to damage.

H. Electric Distribution: Provide receptacle outlets adequate for connection of power tools and equipment.
   1. Provide waterproof connectors to connect separate lengths of electrical power cords if single lengths will not reach areas where construction activities are in progress. Do not exceed safe length-voltage ratio.

I. Lighting: Provide temporary lighting with local switching that provides adequate illumination for construction operations and traffic conditions.
   1. Install and operate temporary lighting that fulfills security and protection requirements without operating entire system.
   2. Provide one 100-W incandescent lamp per 500 sq. ft., uniformly distributed, for general lighting, or equivalent illumination.
   3. Provide one 100-W incandescent lamp every 50 feet in traffic areas.
   4. Provide one 100-W incandescent lamp per story in stairways and ladder runs, located to illuminate each landing and flight.
   5. Install exterior-yard site lighting that will provide adequate illumination for construction operations, traffic conditions, and signage visibility when the Work is being performed.

J. Telephone Service: Provide temporary telephone service throughout construction period for common-use facilities used by all personnel engaged in construction activities.
   1. At each telephone, post a list of important telephone numbers, including police and fire departments, ambulance service, Architects’ office, Engineers' offices and Owner's office.
   2. Provide an answering machine or voice-mail service and a facsimile machine on superintendent's telephone.
   3. Furnish superintendent with electronic paging device for use when away from field office.
   4. Provide a portable cellular telephone for superintendent's use in making and receiving telephone calls when away from field office.

3.3 SUPPORT FACILITIES INSTALLATION

A. General: Comply with the following:
   1. Locate field offices, storage sheds, sanitary facilities, and other temporary construction and support facilities for easy access. Coordinate with Architect on location.
   2. Provide incombustible construction for offices, shops, and sheds located within construction area or within 30 feet of building lines. Comply with NFPA 241.
   3. Maintain support facilities until near Substantial Completion. Remove before Substantial Completion. Personnel remaining after Substantial Completion will be permitted to use permanent facilities, under conditions acceptable to Owner.

B. Temporary Roads and Paved Areas: Construct and maintain temporary roads and paved areas adequate to support loads and to withstand exposure to traffic during construction period. Locate temporary roads and paved areas in same location as permanent roads and paved areas. Extend temporary roads and paved areas, within construction limits indicated, as necessary for construction operations.
   1. Coordinate elevations of temporary roads and paved areas with permanent roads and paved areas.
   2. Prepare subgrade and install subbase and base for temporary roads and paved areas according to Division 32.
   3. Delay installation of final course of permanent hot-mix asphalt pavement until immediately before Substantial Completion. Repair hot-mix asphalt base-course pavement before installation of final course according to Division 32.

C. Traffic Controls: Provide temporary traffic controls at junction of temporary roads with public roads. Include warning signs for public traffic and "STOP" signs for entrance onto public roads. Comply with requirements of authorities having jurisdiction.

D. Dewatering Facilities and Drains: Comply with requirements in applicable Division 31 Sections for temporary drainage and dewatering facilities and operations not directly associated

with construction activities included in individual Sections. Where feasible, use same facilities. Maintain Project site, excavations, and construction free of water.

E. Project Identification and Temporary Signs: Prepare Project identification and other signs in sizes indicated. Install signs where indicated to inform public and persons seeking entrance to Project. Do not permit installation of unauthorized signs.
   1. Project Identification: Provide one (1) project identification sign containing such lettered and graphic data and description relative to the construction as required by the Architect.
      a. Project sign shall be as indicated in Division 01 “Project Identification”.
      b. Engage an experienced sign painter to apply graphics for Project identification signs. Comply with details indicated.
      c. Provide copy of proposed sign to Architect for review prior to fabrication.
      d. **Sign shall be installed no later than 2 weeks after notice to proceed**.
   2. Prepare temporary signs to provide directional information to construction personnel and visitors.

F. Waste Disposal Facilities: Provide waste-collection containers in sizes adequate to handle waste from construction operations. Containerize and clearly label hazardous, dangerous, or unsanitary waste materials separately from other waste. Comply with Division 01 Section for progress cleaning requirements.
   1. If required by authorities having jurisdiction, provide separate containers, clearly labeled, for each type of waste material to be deposited.

G. Common-Use Field Office: Provide an insulated, weathertight, heated and air-conditioned field office for use as a common facility by all personnel engaged in construction activities; of sufficient size to accommodate required office personnel and meetings of 16 persons at Project site. Keep office clean and orderly.
   1. Furnish and equip offices as follows:
      a. Desk and four chairs, four-drawer file cabinet, a plan table, a plan rack, and bookcase.
      b. Provide a room of adequate square footage for Project meetings. Furnish room with conference table, 16 folding chairs, and 4-foot- square tack board.
   2. Provide an electric heater with thermostat capable of maintaining a uniform indoor temperature of 68 deg F.
   3. Provide an air-conditioning unit capable of maintaining an indoor temperature of 72 deg F.
   4. Provide fluorescent light fixtures capable of maintaining average illumination of 20 fc at desk height. Provide 110- to 120-V duplex outlets spaced at not more than 12-foot intervals, 1 per wall in each room.

H. Storage and Fabrication Sheds: Provide sheds sized, furnished, and equipped to accommodate materials and equipment involved, including temporary utility services. Sheds may be open shelters or fully enclosed spaces within building or elsewhere on-site.

3.4 SECURITY AND PROTECTION FACILITIES INSTALLATION

A. Environmental Protection: Provide protection, operate temporary facilities, and conduct construction in ways and by methods that comply with environmental regulations and that minimize possible air, waterway, and subsoil contamination or pollution or other undesirable effects. Avoid using tools and equipment that produce harmful noise. Restrict use of noisemaking tools and equipment to hours that will minimize complaints from persons or firms near Project site.

B. Stormwater Control: Provide earthen embankments and similar barriers in and around excavations and subgrade construction, sufficient to prevent flooding by runoff of stormwater from heavy rains.

C. Tree and Plant Protection: Install temporary fencing located as indicated or outside the drip line of trees to protect vegetation from construction damage. Protect tree root systems from damage, flooding, and erosion.

D. Pest Control: Before deep foundation work has been completed, retain a local exterminator or pest-control company to recommend practices to minimize attraction and harboring of rodents, roaches, and other pests. Engage this pest-control service to perform extermination and control procedures at regular intervals so Project will be free of pests and their residues at Substantial Completion. Obtain extended warranty for Owner. Perform control operations lawfully, using environmentally safe materials.

E. Material Storage Enclosure Fence: Install enclosure fence with lockable gates to completely enclose and hide the materials storage, or store as much material in locked trailers as practicable.
   1. Set fixed 6’-0” high chain-link fence posts in compacted mixture of gravel and earth.

F. Security Enclosure and Lockup: Install substantial temporary enclosure around partially completed areas of construction. Provide lockable entrances to prevent unauthorized entrance, vandalism, theft, and similar violations of security.

G. Barricades, Warning Signs, and Lights: Comply with standards and code requirements for erecting structurally adequate barricades. Paint with appropriate colors, graphics, and warning signs to inform personnel and public of possible hazard. Where appropriate and needed, provide lighting, including flashing red or amber lights.

H. Temporary Enclosures: Provide temporary enclosures for protection of construction, in progress and completed, from exposure, foul weather, other construction operations, and similar activities. Provide temporary weathertight enclosure for building exterior.
   1. Where heating or cooling is needed and permanent enclosure is not complete, provide insulated temporary enclosures. Coordinate enclosure with ventilating and material drying or curing requirements to avoid dangerous conditions and effects.
   2. Vertical Openings: Close openings of 25 sq. ft. or less with plywood or similar materials.
   3. Horizontal Openings: Close openings in floor or roof decks and horizontal surfaces with load-bearing, wood-framed construction.
   4. Install tarpaulins securely using fire-retardant-treated wood framing and other materials.
   5. Seal joints and perimeter. Equip partitions with dustproof doors and security locks.
   6. Protect air-handling equipment.
   7. Weatherstrip openings.

I. Temporary Fire Protection: Until fire-protection needs are supplied by permanent facilities, install and maintain temporary fire-protection facilities of types needed to protect against reasonably predictable and controllable fire losses. Comply with NFPA 241.
   1. Provide fire extinguishers, installed on walls on mounting brackets, visible and accessible from space being served, with sign mounted above.
      a. Locate fire extinguishers where convenient and effective for their intended purpose.
   2. Store combustible materials in containers in fire-safe locations.
   3. Maintain unobstructed access to fire extinguishers, fire hydrants, temporary fire-protection facilities, stairways, and other access routes for firefighting. Prohibit smoking in hazardous fire-exposure areas.

4. Supervise welding operations, combustion-type temporary heating units, and similar sources of fire ignition.
5. Permanent Fire Protection: At earliest feasible date in each area of Project, complete installation of permanent fire-protection facility, including connected services, and place into operation and use. Instruct key personnel on use of facilities.
6. Develop and supervise an overall fire-prevention and first-aid fire-protection program for personnel at Project site. Review needs with local fire department and establish procedures to be followed. Instruct personnel in methods and procedures. Post warnings and information.
7. Provide hoses for fire protection of sufficient length to reach construction areas. Hang hoses with a warning sign stating that hoses are for fire-protection purposes only and are not to be removed. Match hose size with outlet size and equip with suitable nozzles.

3.5 OPERATION, TERMINATION AND REMOVAL

A. Supervision: Enforce strict discipline in use of temporary facilities. To minimize waste and abuse, limit availability of temporary facilities to essential and intended uses.

B. Maintenance: Maintain facilities in good operating condition until removal. Protect from damage caused by freezing temperatures and similar elements.
1. Maintain operation of temporary enclosures, heating, cooling, humidity control, ventilation, and similar facilities on a 24-hour basis where required to achieve indicated results and to avoid possibility of damage.
2. Prevent water-filled piping from freezing. Maintain markers for underground lines. Protect from damage during excavation operations.

C. Temporary Facility Changeover: Except for using permanent fire protection as soon as available, do not change over from using temporary security and protection facilities to permanent facilities until Substantial Completion.

D. Termination and Removal: Remove each temporary facility when need for its service has ended, when it has been replaced by authorized use of a permanent facility, or no later than Substantial Completion. Complete or, if necessary, restore permanent construction that may have been delayed because of interference with temporary facility. Repair damaged Work, clean exposed surfaces, and replace construction that cannot be satisfactorily repaired.
1. Materials and facilities that constitute temporary facilities are the property of Contractor. Owner reserves right to take possession of Project identification signs.
2. At Substantial Completion, clean and renovate permanent facilities used during construction period. Comply with final cleaning requirements in Division 01 Section "Closeout Procedures."

END OF SECTION 01 50 00

SECTION 01 58 00 - PROJECT IDENTIFICATION

NOTES:
1. SIGN TO BE 4' X 8' DURAPLY 3/4 " PLYWOOD
2. MOUNT ON 4" X 4" TREATED WOOD POSTS (PAINT WHITE)
3. ALL LETTERS TO BE AMERICO STYLE U.N.O.
4. ALL PAINT NO. TO BE ICI PAINT CO. OR APPROVED SUBSTITUTE
5. BLACK - 1673 DARK SECRET OONN 05/000
6. ORANGE - ICI PAINT COLOR TO MATCH CMYK - CYAN 20, MAGENTA 82, YELLOW 97, BLACK 10
7. GRAY - ICI PAINT COLOR TO MATCH CMYK - CYAN 36, MAGENTA 28, YELLOW 27, BLACK 0

NOTE:
GENERAL CONTRACTOR SHALL PROVIDE ALL LABOR AND MATERIALS NECESSARY TO FURNISH AND INSTALL SIGN AS INDICATED ABOVE. COORDINATE LOCATION WITH OWNER & ARCHITECT

PROVIDE TWO SIGNS AS INDICATED ABOVE AND MOUNT TOGETHER IN "V" SHAPE.

SECTION 01 60 00 - PRODUCT REQUIREMENTS

PART 1 - GENERAL

1.1 RELATED DOCUMENTS

A. Drawings and general provisions of the Contract, including General and Supplementary Conditions and other Division 01 Specification Sections, apply to this Section.

1.2 SUMMARY

A. This Section includes the following administrative and procedural requirements: selection of products for use in Project; product delivery, storage, and handling; manufacturers' standard warranties on products; special warranties; product substitutions; and comparable products.

B. Related Sections include the following:
1. Division 01 Section “Allowances” for products selected under an allowance.
2. Division 01 Section “Alternates” for products selected under an alternate.
3. Division 01 Section “References” for applicable industry standards for products specified.
4. Division 01 Section "Closeout Procedures" for submitting warranties for contract closeout.
5. Divisions 02 through 49 Sections for specific requirements for warranties on products and installations specified to be warranted.

1.3 DEFINITIONS

A. Products: Items purchased for incorporating into the Work, whether purchased for Project or taken from previously purchased stock. The term "product" includes the terms "material," "equipment," "system," and terms of similar intent.
1. Named Products: Items identified by manufacturer's product name, including make or model number or other designation, shown or listed in manufacturer's published product literature, that is current as of date of the Contract Documents.
2. New Products: Items that have not previously been incorporated into another project or facility, except that products consisting of recycled-content materials are allowed, unless explicitly stated otherwise. Products salvaged or recycled from other projects are not considered new products.
3. Comparable Product: Product that is demonstrated and approved through submittal process, or where indicated as a product substitution, to have the indicated qualities related to type, function, dimension, in-service performance, physical properties, appearance, and other characteristics that equal or exceed those of specified product.

B. Substitutions: Changes in products, materials, equipment, and methods of construction from those required by the Contract Documents and proposed by Contractor.

C. Basis-of-Design Product Specification: Where a specific manufacturer's product is named and accompanied by the words "basis of design," including make or model number or other designation, to establish the significant qualities related to type, function, dimension, in-service performance, physical properties, appearance, and other characteristics for purposes of evaluating comparable products of other named manufacturers.

D. Manufacturer's Warranty: Preprinted written warranty published by individual manufacturer for a particular product and specifically endorsed by manufacturer to Owner.

E. Special Warranty: Written warranty required by or incorporated into the Contract Documents, either to extend time limit provided by manufacturer's warranty or to provide more rights for Owner.

1.4 SUBMITTALS

A. Product List: Submit a list, in tabular form, showing specified products. Include generic names of products required. Include manufacturer's name and proprietary product names for each product.
   1. Coordinate product list with Contractor's Construction Schedule and the Submittals Schedule.
   2. Form:
      a. Specification Section number and title.
      b. Proprietary name, model number, and similar designations
      c. Manufacturer’s name and address.
      d. Supplier’s name and address.
      e. Installer’s name and address.
      f. Identification of items that require early submittal approval for scheduled delivery date.
   3. Completed List: Within sixty (60) days after date of commencement of the Work, submit three (3) copies of completed product list. Include a written explanation for omissions of data and for variations from Contract requirements.
   4. Architect's Action: Architect will respond in writing to Contractor within fifteen (15) days of receipt of completed product list. Architect's response will include a list of unacceptable product selections and a brief explanation of reasons for this action. Architect's response, or lack of response, does not constitute a waiver of requirement that products comply with the Contract Documents.

B. Substitution Requests: Submit three copies of each request for consideration. Identify product or fabrication or installation method to be replaced. Include Specification Section number and title and Drawing numbers and titles.
   1. Documentation: Show compliance with requirements for substitutions and the following, as applicable:
      a. Statement indicating why specified material or product cannot be provided.
      b. Coordination information, including a list of changes or modifications needed to other parts of the Work and to construction performed by Owner and separate contractors, that will be necessary to accommodate proposed substitution.
      c. Product Data, including drawings and descriptions of products and fabrication and installation procedures.
      d. Samples, where applicable or requested.
      e. Material test reports from a qualified testing agency indicating and interpreting test results for compliance with requirements indicated.
      f. Cost information, including a proposal of change, if any, in the Contract Sum.
      g. Contractor's certification that proposed substitution complies with requirements in the Contract Documents and is appropriate for applications indicated.
      h. Contractor's waiver of rights to additional payment or time that may subsequently become necessary because of failure of proposed substitution to produce indicated results.

2. Architect's Action: If necessary, Architect will request additional information or documentation for evaluation within one week of receipt of a request for substitution. Architect will notify Contractor of acceptance or rejection of proposed substitution within fifteen (15) days of receipt of request, or seven (7) days of receipt of additional information or documentation, whichever is later.
   a. Form of Acceptance: Change Order.
   b. Use product specified if Architect cannot make a decision on use of a proposed substitution within time allocated.

C. Basis-of-Design Product Specification Submittal: Comply with requirements in Division 01 Section "Submittal Procedures." Show compliance with requirements.

1.5 QUALITY ASSURANCE

A. Compatibility of Options: If Contractor is given option of selecting between two or more products for use on Project, product selected shall be compatible with products previously selected, even if previously selected products were also options.
   1. Each contractor is responsible for providing products and construction methods compatible with products and construction methods of other contractors.
   2. If a dispute arises between contractors over concurrently selectable but incompatible products, Architect will determine which products shall be used.

1.6 PRODUCT DELIVERY, STORAGE, AND HANDLING

A. Deliver, store, and handle products using means and methods that will prevent damage, deterioration, and loss, including theft. Comply with manufacturer's written instructions.
   1. Schedule delivery to minimize long-term storage at Project site and to prevent overcrowding of construction spaces.
   2. Coordinate delivery with installation time to ensure minimum holding time for items that are flammable, hazardous, easily damaged, or sensitive to deterioration, theft, and other losses.
   3. Deliver products to Project site in an undamaged condition in manufacturer's original sealed container or other packaging system, complete with labels and instructions for handling, storing, unpacking, protecting, and installing.
   4. Inspect products on delivery to ensure compliance with the Contract Documents and to ensure that products are undamaged and properly protected.
   5. Store products to allow for inspection and measurement of quantity or counting of units.
   6. Store materials in a manner that will not endanger Project structure.
   7. Store products that are subject to damage by the elements, under cover in a weathertight enclosure above ground, with ventilation adequate to prevent condensation.
   8. Comply with product manufacturer's written instructions for temperature, humidity, ventilation, and weather-protection requirements for storage.
   9. Protect stored products from damage.

1.7 PRODUCT WARRANTIES

A. Warranties specified in other Sections shall be in addition to, and run concurrent with, other warranties required by the Contract Documents. Manufacturer's disclaimers and limitations on product warranties do not relieve Contractor of obligations under requirements of the Contract Documents.

B. Special Warranties: Prepare a written document that contains appropriate terms and identification, ready for execution. Submit a draft for approval before final execution.
   1. Manufacturer's Standard Form: Modified to include Project-specific information and properly executed.
   2. Specified Form: Forms are included with the Specifications. Prepare a written document using appropriate form properly executed.
   3. Refer to Divisions 02 through 49 Sections for specific content requirements and particular requirements for submitting special warranties.

C. Submittal Time: Comply with requirements in Division 01 Section "Closeout Procedures."

D. All warranties/guarantees shall become effective on the date of Substantial Completion as established by the Architect. Written warranties/guarantees shall be signed by the manufacturer or subcontractor and countersigned by the Contractor. All warranties/guarantees shall be addressed to the Owner in care of the Architect.

PART 2 - PRODUCTS

2.1 PRODUCT OPTIONS

A. General Product Requirements: Provide products that comply with the Contract Documents, that are undamaged and, unless otherwise indicated, that are new at time of installation.
   1. Provide products complete with accessories, trim, finish, fasteners, and other items needed for a complete installation and indicated use and effect.
   2. Standard Products: If available, and unless custom products or nonstandard options are specified, provide standard products of types that have been produced and used successfully in similar situations on other projects.
   3. Owner reserves the right to limit selection to products with warranties not in conflict with requirements of the Contract Documents.
   4. Where products are accompanied by the term "as selected," Architect will make selection.
   5. Where products are accompanied by the term "match sample," sample to be matched is Architect's.
   6. Descriptive, performance, and reference standard requirements in the Specifications establish "salient characteristics" of products.
   7. Or Equal: Where products are specified by name and accompanied by the term “or equal” or “or approved equal” or “or approved,” comply with provisions in “Comparable Products” article to obtain approval for use of an unnamed product.

B. Product Selection Procedures: Procedures for product selection include the following:
   1. Products: Where Specification paragraphs or subparagraphs titled "Products" introduce a list of names of both products and manufacturers, provide one of the products listed that complies with requirements.
      a. Substitutions may be considered**,** unless otherwise indicated.

   2. Manufacturers: Where Specification paragraphs or subparagraphs titled "Manufacturers" introduce a list of manufacturers’ names, provide a product by the manufacturers that complies with requirements.
      a. Substitutions may be considered**,** unless otherwise indicated.
   3. Available Products: Where Specification paragraphs or subparagraphs titled "Available Products" introduce a list of names of both products and manufacturers, provide one of the products listed or another product that complies with requirements. Comply with

provisions in “Comparable Products” article to obtain approval for use of an unnamed product.

4. Available Manufacturers: Where Specification paragraphs or subparagraphs titled "Available Manufacturers" introduce a list of manufacturers' names, provide a product by one of the manufacturers listed or another manufacturer that complies with requirements. Comply with provisions in “Comparable Products” article to obtain approval for use of an unnamed product.
5. Product Options: Where Specification paragraphs titled "Product Options” indicate that size, profiles, and dimensional requirements on Drawings are based on a specific product or system, provide either the specific product or system indicated or a comparable product or system by another manufacturer. Comply with provisions in “Product Substitutions” article.
6. Basis-of-Design Products: Where Specification paragraphs or subparagraphs titled "Basis-of-Design Product" are included and also introduce or refer to a list of manufacturers' names, provide either the specified product or a comparable product by one of the other named manufacturers. Drawings and Specifications indicate sizes, profiles, dimensions, and other characteristics that are based on the product named. Comply with provisions in "Comparable Products" Article to obtain approval for use of an unnamed product.
   a. Substitutions may be considered, unless otherwise indicated.
7. Visual Matching Specification: Where Specifications require matching an established Sample, select a product (and manufacturer) that complies with requirements and matches Architect’s sample. Architect’s decision will be final on whether a proposed product matches satisfactorily.
   a. If no product available within specified category matches satisfactorily and complies with other specified requirements, comply with provisions of the Contract Documents on “substitutions” for selection of a matching product.
8. Visual Selection Specification: Where Specifications include the phrase “as selected from manufacturer’s colors, patterns, textures” or a similar phrase, select a product (and manufacturer) that complies with other specified requirements.
   a. Standard Range: Where Specifications include the phrase “standard range of colors, patterns, textures” or similar phrase, Architect will select color, pattern, or texture from manufacturer’s product line that does not include premium items.
   b. Full Range: Where Specifications include the phrase “full range of colors, patterns, textures” or similar phrase, Architect will select color, pattern, or texture from manufacturer’s product line that includes both standard and premium items.

2.2 PRODUCT SUBSTITUTIONS

A. Timing: Architect will consider requests for substitution if received within sixty (60) days after the Notice to Proceed. Requests received after that time may be considered or rejected at discretion of Architect.

B. Conditions: Architect will consider Contractor's request for substitution when the following conditions are satisfied. If the following conditions are not satisfied, Architect will return requests without action, except to record noncompliance with these requirements:
   1. Requested substitution offers Owner a substantial advantage in cost, time, energy conservation, or other considerations, after deducting additional responsibilities Owner must assume. Owner's additional responsibilities may include compensation to Architect for redesign and evaluation services, increased cost of other construction by Owner, and similar considerations.

2. Requested substitution must be made in writing directly from the Contractor and not from a subcontractor or material supplier.
3. Requested substitution does not require extensive revisions to the Contract Documents.
4. Requested substitution is consistent with the Contract Documents and will produce indicated results.
5. Substitution request is fully documented and properly submitted.
6. Requested substitution will not adversely affect Contractor's Construction Schedule.
7. Requested substitution is compatible with other portions of the Work.
8. Requested substitution has been coordinated with other portions of the Work and that he waives all claims for additional reimbursement related to the substitution which subsequently become apparent.
9. Requested substitution provides specified warranty.
10. If requested substitution involves more than one contractor, requested substitution has been coordinated with other portions of the Work, is uniform and consistent, is compatible with other products, and is acceptable to all contractors involved.
11. By forwarding a substitution request the Contractor represents that he has personally investigated the proposed substitute product and determined that it is equal or superior in all respects to that specified.

2.3 COMPARABLE PRODUCTS

A. Where products or manufacturers are specified by name, submit the following, in addition to other required submittals, to obtain approval of an unnamed product:
   1. Evidence that the proposed product does not require extensive revisions to the Contract Documents, that it is consistent with the Contract Documents and will produce the indicated results, and that it is compatible with other portions of the Work.
   2. Detailed comparison of significant qualities of proposed product with those named in the Specifications. Significant qualities include attributes such as performance, weight, size, durability, visual effect, and specific features and requirements indicated.
   3. Evidence that proposed product provides specified warranty.
   4. List of similar installations for completed projects with project names and addresses and names and addresses of architects and owners, if requested.
   5. Samples, if requested.

PART 3 - EXECUTION (Not Used)

END OF SECTION 01 60 00

SECTION 01 73 00 – EXECUTION REQUIREMENTS

PART 1 - GENERAL

1.1 RELATED DOCUMENTS

A. Drawings and general provisions of the Contract, including General and Supplementary Conditions and other Division 01 Specification Sections, apply to this Section.

1.2 SUMMARY

A. This Section includes general procedural requirements governing execution of the Work including, but not limited to, the following:
   1. Construction layout.
   2. Field engineering and surveying.
   3. General installation of products.
   4. Coordination of Owner-installed products.
   5. Progress cleaning.
   6. Starting and adjusting.
   7. Protection of installed construction.
   8. Correction of the Work.

B. Related Sections include the following:
   1. Division 01 Section "Project Management and Coordination" for procedures for coordinating field engineering with other construction activities.
   2. Division 01 Section "Submittal Procedures" for submitting surveys.
   3. Division 01 Section "Cutting and Patching" for procedural requirements for cutting and patching necessary for the installation or performance of other components of the Work.
   4. Division 01 Section "Closeout Procedures" for submitting final property survey with Project Record Documents, recording of Owner-accepted deviations from indicated lines and levels, and final cleaning.

1.3 QUALITY ASSURANCE

1.4 Land Surveyor Qualifications: A professional land surveyor who is legally qualified to practice in jurisdiction where Project is located and who is experienced in providing land-surveying services of the kind indicated.

PART 2 - PRODUCTS (Not Used)

PART 3 - EXECUTION

3.1 EXAMINATION

A. Existing Conditions: The existence and location of site improvements, utilities, and other construction indicated as existing are not guaranteed. Before beginning work, investigate and verify the existence and location of construction affecting the Work.
   1. Before construction, verify the location and points of connection of utility services.

B. Existing Utilities: The existence and location of underground and other utilities and construction indicated as existing are not guaranteed. Before beginning sitework, investigate and verify the existence and location of underground utilities and other construction affecting the Work.

1. Before construction, verify the location and invert elevation at points of connection of sanitary sewer, storm sewer, and water-service piping; and underground electrical services.
2. Furnish location data for work related to Project that must be performed by public utilities serving Project site.

C. Acceptance of Conditions: Examine substrates, areas, and conditions, with Installer or Applicator present where indicated, for compliance with requirements for installation tolerances and other conditions affecting performance. Record observations.
1. Written Report: Where a written report listing conditions detrimental to performance of the Work is required by other Sections, include the following:
   a. Description of the Work.
   b. List of detrimental conditions, including substrates.
   c. List of unacceptable installation tolerances.
   d. Recommended corrections.
2. Verify compatibility with and suitability of substrates, including compatibility with existing finishes or primers.
3. Examine roughing-in for mechanical and electrical systems to verify actual locations of connections before equipment and fixture installation.
4. Examine walls, floors, and roofs for suitable conditions where products and systems are to be installed.
5. Proceed with installation only after unsatisfactory conditions have been corrected. Proceeding with the Work indicates acceptance of surfaces and conditions. Upon acceptance of surfaces and conditions, any adjustments required for a satisfactory installation shall be made by the Contractor who accepted the Work.

3.2 PREPARATION

A. Existing Utility Information: Furnish information to local utility that is necessary to adjust, move, or relocate existing utility structures, utility poles, lines, services, or other utility appurtenances located in or affected by construction. Coordinate with authorities having jurisdiction.

B. Field Measurements: Take field measurements as required to fit the Work properly. Recheck measurements before installing each product. Where portions of the Work are indicated to fit to other construction, verify dimensions of other construction by field measurements before fabrication. Coordinate fabrication schedule with construction progress to avoid delaying the Work.

C. Space Requirements: Verify space requirements and dimensions of items shown diagrammatically on Drawings.

D. Review of Contract Documents and Field Conditions: Immediately on discovery of the need for clarification of the Contract Documents, submit a request for information to Architect. Include a detailed description of problem encountered, together with recommendations for changing the Contract Documents.

3.3 CONSTRUCTION LAYOUT

A. Verification: Before proceeding to lay out the Work, verify layout information shown on Drawings, in relation to the property survey and existing benchmarks. If discrepancies are discovered, notify Architect promptly.

B. General: Engage a land surveyor to lay out the Work using accepted surveying practices.

1. Establish benchmarks and control points to set lines and levels at each story of construction and elsewhere as needed to locate each element of Project.
2. Establish dimensions within tolerances indicated. Do not scale Drawings to obtain required dimensions.
3. Inform installers of lines and levels to which they must comply.
4. Check the location, level and plumb, of every major element as the Work progresses.
5. Notify Architect when deviations from required lines and levels exceed allowable tolerances.
6. Close site surveys with an error of closure equal to or less than the standard established by authorities having jurisdiction.

C. Site Improvements: Locate and lay out site improvements, including pavements, grading, fill and topsoil placement, utility slopes, and invert elevations.

D. Building Lines and Levels: Locate and lay out control lines and levels for structures, building foundations, column grids, and floor levels, including those required for mechanical and electrical work. Transfer survey markings and elevations for use with control lines and levels. Level foundations and piers from two or more locations.

3.4 FIELD ENGINEERING

A. Reference Points: Locate existing permanent benchmarks, control points, and similar reference points before beginning the Work. Preserve and protect permanent benchmarks and control points during construction operations.
1. Do not change or relocate existing benchmarks or control points without prior written approval of Architect. Report lost or destroyed permanent benchmarks or control points promptly. Report the need to relocate permanent benchmarks or control points to Architect before proceeding.
2. Replace lost or destroyed permanent benchmarks and control points promptly. Base replacements on the original survey control points.

B. Benchmarks: Establish and maintain a minimum of two (2) permanent benchmarks on Project site, referenced to data established by survey control points. Comply with authorities having jurisdiction for type and size of benchmark.
1. Record benchmark locations, with horizontal and vertical data, on Project Record Documents.
2. Where the actual location or elevation of layout points cannot be marked, provide temporary reference points sufficient to locate the Work.
3. Remove temporary reference points when no longer needed. Restore marked construction to its original condition.

3.5 INSTALLATION

A. General: Locate the Work and components of the Work accurately, in correct alignment and elevation, as indicated.
1. Make vertical work plumb and make horizontal work level.
2. Where space is limited, install components to maximize space available for maintenance and ease of removal for replacement.
3. Conceal pipes, ducts, and wiring in finished areas, unless otherwise indicated.

B. Comply with manufacturer's written instructions and recommendations for installing products in applications indicated.

C. Install products at the time and under conditions that will ensure the best possible results. Maintain conditions required for product performance until Substantial Completion.

D. Conduct construction operations so no part of the Work is subjected to damaging operations or loading in excess of that expected during normal conditions of occupancy.

E. Tools and Equipment: Do not use tools or equipment that produce harmful noise levels.

F. Anchors and Fasteners: Provide anchors and fasteners as required to anchor each component securely in place, accurately located and aligned with other portions of the Work.
   1. Mounting Heights: Where mounting heights are not indicated, mount components at heights directed by Architect.
   2. Allow for building movement, including thermal expansion and contraction.

G. Joints: Make joints of uniform width. Where joint locations in exposed work are not indicated, arrange joints for the best visual effect. Fit exposed connections together to form hairline joints.

H. Hazardous Materials: Use products, cleaners, and installation materials that are not considered hazardous.

3.6 PROGRESS CLEANING

A. General: Clean Project site and work areas daily, including common areas. Coordinate progress cleaning for joint-use areas where more than one installer has worked. Enforce requirements strictly. Dispose of materials lawfully.
   1. Comply with requirements in NFPA 241 for removal of combustible waste materials and debris.
   2. Do not hold materials more than 7 days during normal weather or 3 days if the temperature is expected to rise above 80 deg F.
   3. Containerize hazardous and unsanitary waste materials separately from other waste. Mark containers appropriately and dispose of legally, according to regulations.

B. Site: Maintain Project site free of waste materials and debris.

C. Work Areas: Clean areas where work is in progress to the level of cleanliness necessary for proper execution of the Work.
   1. Remove liquid spills promptly.
   2. Where dust would impair proper execution of the Work, broom-clean or vacuum the entire work area, as appropriate.

D. Installed Work: Keep installed work clean. Clean installed surfaces according to written instructions of manufacturer or fabricator of product installed, using only cleaning materials specifically recommended. If specific cleaning materials are not recommended, use cleaning materials that are not hazardous to health or property and that will not damage exposed surfaces.

E. Concealed Spaces: Remove debris from concealed spaces before enclosing the space.

F. Exposed Surfaces: Clean exposed surfaces and protect as necessary to ensure freedom from damage and deterioration at time of Substantial Completion.

G. Cutting and Patching: Clean areas and spaces where cutting and patching are performed. Completely remove paint, mortar, oils, putty, and similar materials.
   1. Thoroughly clean piping, conduit, and similar features before applying paint or other finishing materials. Restore damaged pipe covering to its original condition.

H. Waste Disposal: Burying or burning waste materials on-site will not be permitted. Washing waste materials down sewers or into waterways will not be permitted.

I. During handling and installation, clean and protect construction in progress and adjoining materials already in place. Apply protective covering where required to ensure protection from damage or deterioration at Substantial Completion.

J. Clean and provide maintenance on completed construction as frequently as necessary through the remainder of the construction period. Adjust and lubricate operable components to ensure operability without damaging effects.

K. Limiting Exposures: Supervise construction operations to assure that no part of the construction, completed or in progress, is subject to harmful, dangerous, damaging, or otherwise deleterious exposure during the construction period.

3.7 STARTING AND ADJUSTING

A. Start equipment and operating components to confirm proper operation. Remove malfunctioning units, replace with new units, and retest.

B. Adjust operating components for proper operation without binding. Adjust equipment for proper operation.

C. Test each piece of equipment to verify proper operation. Test and adjust controls and safeties. Replace damaged and malfunctioning controls and equipment.

D. Manufacturer's Field Service: If a factory-authorized service representative is required to inspect field-assembled components and equipment installation, comply with qualification requirements in Division 01 Section "Quality Requirements."

3.8 PROTECTION OF INSTALLED CONSTRUCTION

A. Provide final protection and maintain conditions that ensure installed Work is without damage or deterioration at time of Substantial Completion.

B. Comply with manufacturer's written instructions for temperature and relative humidity.

3.9 CORRECTION OF THE WORK

A. Repair or remove and replace defective construction. Restore damaged substrates and finishes. Comply with requirements in Division 01 Section "Cutting and Patching."
   1. Repairing includes replacing defective parts, refinishing damaged surfaces, touching up with matching materials, and properly adjusting operating equipment.

B. Restore permanent facilities used during construction to their specified condition.

C. Remove and replace damaged surfaces that are exposed to view if surfaces cannot be repaired without visible evidence of repair.

D. Repair components that do not operate properly. Remove and replace operating components that cannot be repaired.

E. Remove and replace chipped, scratched, and broken glass or reflective surfaces.

END OF SECTION 01 73 00

SECTION 01 73 29 - CUTTING AND PATCHING

PART 1 - GENERAL

1.1 RELATED DOCUMENTS

A. Drawings and general provisions of the Contract, including General and Supplementary Conditions and other Division 01 Specification Sections, apply to this Section.

1.2 SUMMARY

A. This Section includes procedural requirements for cutting and patching.

B. Related Sections include the following:
   1. Division 07 Section "Through-Penetration Firestop Systems" for patching fire-rated construction.
   2. Divisions 02 through 49 Sections for specific requirements and limitations applicable to cutting and patching individual parts of the Work.
      a. Requirements in this Section apply to mechanical and electrical installations. Refer to Divisions 23 and 26 Sections for other requirements and limitations applicable to cutting and patching mechanical and electrical installations.

1.3 DEFINITIONS

A. Cutting: Removal of existing construction necessary to permit installation or performance of other Work.

B. Patching: Fitting and repair work required to restore surfaces to original conditions after installation of other Work.

1.4 SUBMITTALS

A. Cutting and Patching Proposal: Submit a proposal describing procedures at least 10 days before the time cutting and patching will be performed, requesting approval to proceed. Include the following information:
   1. Extent: Describe cutting and patching, show how they will be performed, and indicate why they cannot be avoided.
   2. Changes to Existing Construction: Describe anticipated results. Include changes to structural elements and operating components as well as changes in building's appearance and other significant visual elements.
   3. Products: List products to be used and firms or entities that will perform the Work.
   4. Dates: Indicate when cutting and patching will be performed.
   5. Utilities: List utilities that cutting and patching procedures will disturb or affect. List utilities that will be relocated and those that will be temporarily out of service. Indicate how long service will be disrupted.

6. Structural Elements: Where cutting and patching involve adding reinforcement to structural elements, submit details and engineering calculations showing integration of reinforcement with original structure.
7. Architect's Approval: Obtain approval of cutting and patching proposal before cutting and patching. Approval does not waive right to later require removal and replacement of unsatisfactory work.

1.5 QUALITY ASSURANCE

A. Structural Elements: Do not cut and patch structural elements in a manner that could change their load-carrying capacity or load-deflection ratio.

B. Operational Elements: Do not cut and patch operating elements and related components in a manner that results in reducing their capacity to perform as intended or that results in increased maintenance or decreased operational life or safety.

C. Visual Requirements: Do not cut and patch construction in a manner that results in visual evidence of cutting and patching. Do not cut and patch construction exposed on the exterior or in occupied spaces in a manner that would, in Architect's opinion, reduce the building's aesthetic qualities. Remove and replace construction that has been cut and patched in a visually unsatisfactory manner.

D. Cutting and Patching Conference: If extensive cutting and patching is required, before proceeding, meet at Project site with parties involved in cutting and patching, including mechanical and electrical trades. Review areas of potential interference and conflict. Coordinate procedures and resolve potential conflicts before proceeding.

1.6 WARRANTY

A. Existing Warranties: Remove, replace, patch, and repair materials and surfaces cut or damaged during cutting and patching operations, by methods and with materials so as not to void existing warranties.

PART 2 - PRODUCTS

2.1 MATERIALS

A. General: Comply with requirements specified in other Sections of these Specifications.

B. Existing Materials: Use materials identical to existing materials. For exposed surfaces, use materials that visually match existing adjacent surfaces to the fullest extent possible.
1. If identical materials are unavailable or cannot be used, use materials that, when installed, will match the visual and functional performance of existing materials.

PART 3 - EXECUTION

3.1 EXAMINATION

A. Examine surfaces to be cut and patched and conditions under which cutting and patching are to be performed.
   1. Compatibility: Before patching, verify compatibility with and suitability of substrates, including compatibility with existing finishes or primers.
   2. Proceed with installation only after unsafe or unsatisfactory conditions have been corrected.

3.2 PREPARATION

A. Temporary Support: Provide temporary support of Work to be cut.

B. Protection: Protect existing construction during cutting and patching to prevent damage. Provide protection from adverse weather conditions for portions of Project that might be exposed during cutting and patching operations.

C. Adjoining Areas: Avoid interference with use of adjoining areas or interruption of free passage to adjoining areas.

D. Existing Services: Where existing services are required to be removed, relocated, or abandoned, bypass such services before cutting to minimize interruption of services to occupied areas.

3.3 PERFORMANCE

A. General: Employ skilled workers to perform cutting and patching. Proceed with cutting and patching at the earliest feasible time, and complete without delay.
   1. Cut existing construction to provide for installation of other components or performance of other construction, and subsequently patch as required to restore surfaces to their original condition.

B. Cutting: Cut existing construction by sawing, drilling, breaking, chipping, grinding, and similar operations, including excavation, using methods least likely to damage elements retained or adjoining construction. If possible, review proposed procedures with original Installer; comply with original Installer's written recommendations.
   1. In general, use hand or small power tools designed for sawing and grinding, not hammering and chopping. Cut holes and slots as small as possible, neatly to size required, and with minimum disturbance of adjacent surfaces. Temporarily cover openings when not in use.
   2. Existing Finished Surfaces: Cut or drill from the exposed or finished side into concealed surfaces.
   3. Concrete or Masonry: Cut using a cutting machine, such as an abrasive saw or a diamond-core drill.
   4. Excavating and Backfilling: Comply with requirements in applicable Division 31 Sections where required by cutting and patching operations.
   5. Mechanical and Electrical Services: Cut off pipe or conduit in walls or partitions to be removed. Cap, valve, or plug and seal remaining portion of pipe or conduit to prevent entrance of moisture or other foreign matter after cutting.
   6. Proceed with patching after construction operations requiring cutting are complete.

C. Patching: Patch construction by filling, repairing, refinishing, closing up, and similar operations following performance of other Work. Patch with durable seams that are as invisible as

possible. Provide materials and comply with installation requirements specified in other Sections of these Specifications.

1. Inspection: Where feasible, test and inspect patched areas after completion to demonstrate integrity of installation.
2. Exposed Finishes: Restore exposed finishes of patched areas and extend finish restoration into retained adjoining construction in a manner that will eliminate evidence of patching and refinishing.
3. Floors and Walls: Where walls or partitions that are removed extend one finished area into another, patch and repair floor and wall surfaces in the new space. Provide an even surface of uniform finish, color, texture, and appearance. Remove existing floor and wall coverings and replace with new materials, if necessary, to achieve uniform color and appearance.
    a. Where patching occurs in a painted surface, apply primer and intermediate paint coats over the patch and apply final paint coat over entire unbroken surface containing the patch. Provide additional coats until patch blends with adjacent surfaces.
4. Ceilings: Patch, repair, or rehang existing ceilings as necessary to provide an even-plane surface of uniform appearance.
5. Exterior Building Enclosure: Patch components in a manner that restores enclosure to a weathertight condition.

END OF SECTION 01 73 29

SECTION 01 77 00 - CLOSEOUT PROCEDURES

PART 1 - GENERAL

1.1 SUMMARY

A. This Section includes administrative and procedural requirements for contract closeout, including, but not limited to, the following:
   1. Inspection procedures.
   2. Project Record Documents.
   3. Operation and maintenance manuals.
   4. Warranties.
   5. Instruction of Owner's personnel.
   6. Final cleaning.

B. See Division 01 for requirements for Applications for Payment for Substantial and Final Completion.

C. See Division 01 for submitting Final Completion construction photographs and negatives.

D. See Divisions 02 through 49 for specific closeout and special cleaning requirements for products of those Sections.

1.2 SUBSTANTIAL COMPLETION

A. Preliminary Procedures: Before requesting inspection for determining date of Substantial Completion, complete the following. List items below that are incomplete in request.
   1. Prepare a list of items to be completed and corrected (punch list), the value of items on the list, and reasons why the Work is not complete.
   2. Advise Owner of pending insurance changeover requirements.
   3. Submit specific warranties, workmanship bonds, maintenance service agreements, final certifications, and similar documents.
   4. Obtain and submit releases permitting Owner unrestricted use of the Work and access to services and utilities. Include occupancy permits, operating certificates, and similar releases.
   5. Prepare and submit Project Record Documents, operation and maintenance manuals, Final Completion construction photographs, damage or settlement surveys, property surveys, and similar final record information.
   6. Deliver tools, spare parts, extra materials, and similar items to location designated by Owner. Label with manufacturer's name and model number where applicable.
   7. Make final changeover of permanent locks and deliver keys to Owner. Advise Owner's personnel of changeover in security provisions.
   8. Complete startup testing of systems.
   9. Submit test/adjust/balance records.
   10. Terminate and remove temporary facilities from Project site, along with mockups, construction tools, and similar elements.
   11. Advise Owner of changeover in heat and other utilities.
   12. Submit changeover information related to Owner's occupancy, use, operation, and maintenance.
   13. Complete final cleaning requirements, including touchup painting.
   14. Touch up and otherwise repair and restore marred exposed finishes to eliminate visual defects.

B. Inspection: Submit a written request for inspection for Substantial Completion. On receipt of request, Architect will either proceed with inspection or notify Contractor of unfulfilled requirements. Architect will prepare the Certificate of Substantial Completion after inspection or will notify Contractor of items, either on Contractor's list or additional items identified by Architect, that must be completed or corrected before certificate will be issued.
   1. Reinspection: Request reinspection when the Work identified in previous inspections as incomplete is completed or corrected.
   2. Results of completed inspection will form the basis of requirements for Final Completion.

1.3 FINAL COMPLETION

A. Preliminary Procedures: Before requesting final inspection for determining date of Final Completion, complete the following:
   1. Submit a final Application for Payment according to Division 01.
   2. Submit certified copy of Architect's Substantial Completion inspection list of items to be completed or corrected (punch list), endorsed and dated by Architect. The certified copy of the list shall state that each item has been completed or otherwise resolved for acceptance.
   3. Submit evidence of final, continuing insurance coverage complying with insurance requirements.
   4. Submit pest-control final inspection report and warranty.
   5. Instruct Owner's personnel in operation, adjustment, and maintenance of products, equipment, and systems.

B. Inspection: Submit a written request for final inspection for acceptance. On receipt of request, Architect will either proceed with inspection or notify Contractor of unfulfilled requirements. Architect will prepare a final Certificate for Payment after inspection or will notify Contractor of construction that must be completed or corrected before certificate will be issued.
   1. Reinspection: Request reinspection when the Work identified in previous inspections as incomplete is completed or corrected.

1.4 LIST OF INCOMPLETE ITEMS (PUNCH LIST)

A. Preparation: Submit three copies of list. Include name and identification of each space and area affected by construction operations for incomplete items and items needing correction including, if necessary, areas disturbed by Contractor that are outside the limits of construction. Use CSI Form 14.1A.
   1. Organize list of spaces in sequential order, starting with exterior areas first and proceeding from lowest floor to highest floor.
   2. Organize items applying to each space by major element, including categories for ceiling, individual walls, floors, equipment, and building systems.

1.5 PROJECT RECORD DOCUMENTS

A. General: Do not use Project Record Documents for construction purposes. Protect Project Record Documents from deterioration and loss. Provide access to Project Record Documents for Architect's reference during normal working hours.

B. Record Drawings: Maintain and submit one set of blue- or black-line white prints of Contract Drawings and Shop Drawings.

1. Mark Record Prints to show the actual installation where installation varies from that shown originally. Require individual or entity who obtained record data, whether individual or entity is Installer, subcontractor, or similar entity, to prepare the marked-up Record Prints.
   a. Give particular attention to information on concealed elements that cannot be readily identified and recorded later.
   b. Record data as soon as possible after obtaining it. Record and check the markup before enclosing concealed installations.
2. Mark record sets with erasable, red-colored pencil. Use other colors to distinguish between changes for different categories of the Work at the same location.
3. Note Construction Change Directive numbers, Change Order numbers, alternate numbers, and similar identification where applicable.
4. Identify and date each Record Drawing; include the designation "PROJECT RECORD DRAWING" in a prominent location. Organize into manageable sets; bind each set with durable paper cover sheets. Include identification on cover sheets.

C. Record Specifications: Submit one copy of Project's Specifications, including addenda and contract modifications. Mark copy to indicate the actual product installation where installation varies from that indicated in Specifications, addenda, and contract modifications.
1. Give particular attention to information on concealed products and installations that cannot be readily identified and recorded later.
2. Mark copy with the proprietary name and model number of products, materials, and equipment furnished, including substitutions and product options selected.
3. Note related Change Orders and Record Drawings, where applicable.

D. Miscellaneous Record Submittals: Assemble miscellaneous records required by other Specification Sections for miscellaneous record keeping and submittal in connection with actual performance of the Work. Bind or file miscellaneous records and identify each, ready for continued use and reference.

1.6 OPERATION AND MAINTENANCE MANUALS

A. Assemble a complete set of operation and maintenance data indicating the operation and maintenance of each system, subsystem, and piece of equipment not part of a system. Include operation and maintenance data required in individual Specification Sections and as follows:
1. Operation Data: Include emergency instructions and procedures, system and equipment descriptions, operating procedures, and sequence of operations.
2. Maintenance Data: Include manufacturer's information, list of spare parts, maintenance procedures, maintenance and service schedules for preventive and routine maintenance, and copies of warranties and bonds.

B. Organize operation and maintenance manuals into suitable sets of manageable size. Bind and index data in heavy-duty, three-ring, vinyl-covered, loose-leaf binders, in thickness necessary to accommodate contents, with pocket inside the covers to receive folded oversized sheets. Identify each binder on front and spine with the printed title "OPERATION AND MAINTENANCE MANUAL," Project name, and subject matter of contents.

1.7 WARRANTIES

A. Submittal Time: Submit written warranties on request of Architect for designated portions of the Work where commencement of warranties other than date of Substantial Completion is indicated.

B. Organize warranty documents into an orderly sequence based on the table of contents of the Project Manual.
   1. Bind warranties and bonds in heavy-duty, 3-ring, vinyl-covered, loose-leaf binders, thickness as necessary to accommodate contents, and sized to receive 8-1/2-by-11-inch paper.
   2. Provide heavy paper dividers with plastic-covered tabs for each separate warranty. Mark tab to identify the product or installation. Provide a typed description of the product or installation, including the name of the product and the name, address, and telephone number of Installer.
   3. Identify each binder on the front and spine with the typed or printed title "WARRANTIES," Project name, and name of Contractor.

C. Provide additional copies of each warranty to include in operation and maintenance manuals.

PART 2 - PRODUCTS

2.1 MATERIALS

A. Cleaning Agents: Use cleaning materials and agents recommended by manufacturer or fabricator of the surface to be cleaned. Do not use cleaning agents that are potentially hazardous to health or property or that might damage finished surfaces.

PART 3 - EXECUTION

3.1 DEMONSTRATION AND TRAINING

A. Instruction: Instruct Owner's personnel to adjust, operate, and maintain systems, subsystems, and equipment not part of a system.
   1. Provide instructors experienced in operation and maintenance procedures.
   2. Provide instruction at mutually agreed-on times. For equipment that requires seasonal operation, provide similar instruction at the start of each season.
   3. Schedule training with Owner, through Architect, with at least seven days' advance notice.
   4. Coordinate instructors, including providing notification of dates, times, length of instruction, and course content.

B. Program Structure: Develop an instruction program that includes individual training modules for each system and equipment not part of a system, as required by individual Specification Sections. For each training module, develop a learning objective and teaching outline.
   1. Include instruction for system design and operational philosophy, review of documentation, operations, adjustments, troubleshooting, maintenance, and repair.

3.2 FINAL CLEANING

A. General: Provide final cleaning. Conduct cleaning and waste-removal operations to comply with local laws and ordinances and Federal and local environmental and antipollution regulations.

B. Cleaning: Employ experienced workers or professional cleaners for final cleaning. Clean each surface or unit to condition expected in an average commercial building cleaning and maintenance program. Comply with manufacturer's written instructions.
   1. Complete the following cleaning operations before requesting inspection for certification of Substantial Completion for entire Project or for a portion of Project:

a. Clean Project site, yard, and grounds, in areas disturbed by construction activities, including landscape development areas, of rubbish, waste material, litter, and other foreign substances.
b. Sweep paved areas broom clean. Remove petrochemical spills, stains, and other foreign deposits.
c. Rake grounds that are neither planted nor paved to a smooth, even-textured surface.
d. Remove tools, construction equipment, machinery, and surplus material from Project site.
e. Clean exposed exterior and interior hard-surfaced finishes to a dirt-free condition, free of stains, films, and similar foreign substances. Avoid disturbing natural weathering of exterior surfaces. Restore reflective surfaces to their original condition.
f. Remove debris and surface dust from limited access spaces, including roofs, plenums, shafts, trenches, equipment vaults, manholes, attics, and similar spaces.
g. Sweep concrete floors broom-clean in unoccupied spaces.
h. Vacuum carpet and similar soft surfaces, removing debris and excess nap; shampoo if visible soil or stains remain.
i. Clean transparent materials, including mirrors and glass in doors and windows. Remove glazing compounds and other noticeable, vision-obscuring materials. Replace chipped or broken glass and other damaged transparent materials. Polish mirrors and glass, taking care not to scratch surfaces.
j. Remove labels that are not permanent.
k. Touch up and otherwise repair and restore marred, exposed finishes and surfaces. Replace finishes and surfaces that cannot be satisfactorily repaired or restored or that already show evidence of repair or restoration.
    1) Do not paint over "UL" and similar labels, including mechanical and electrical nameplates.
l. Wipe surfaces of mechanical and electrical equipment, elevator equipment, and similar equipment. Remove excess lubrication, paint and mortar droppings, and other foreign substances.
m. Replace parts subject to unusual operating conditions.
n. Clean plumbing fixtures to a sanitary condition, free of stains, including stains resulting from water exposure.
o. Replace disposable air filters and clean permanent air filters. Clean exposed surfaces of diffusers, registers, and grills.
p. Clean light fixtures, lamps, globes, and reflectors to function with full efficiency. Replace burned-out bulbs, and those noticeably dimmed by hours of use, and defective and noisy starters in fluorescent and mercury vapor fixtures to comply with requirements for new fixtures.
q. Leave Project clean and ready for occupancy.

C. Pest Control: Engage an experienced, licensed exterminator to make a final inspection and rid Project of rodents, insects, and other pests. Prepare a report.

D. Comply with safety standards for cleaning. Do not burn waste materials. Do not bury debris or excess materials on Owner's property. Do not discharge volatile, harmful, or dangerous materials into drainage systems. Remove waste materials from Project site and dispose of lawfully.

END OF SECTION 01 77 00

Division 02 – Existing Conditions

SECTION 02 41 19 - SELECTIVE STRUCTURE DEMOLITION

PART 1 - GENERAL

1.1 SUMMARY

A. This Section includes the following:

1. Demolition and removal of selected portions of building or structure.
2. Demolition and removal of selected site elements.
3. Salvage of existing items to be reused or recycled.

B. See Division 31 for site clearing and removal of above and below grade improvements.

1.2 DEFINITIONS

A. Remove: Detach items from existing construction and legally dispose of them off-site, unless indicated to be removed and salvaged or removed and reinstalled.

B. Remove and Salvage: Detach items from existing construction and deliver them to Owner ready for reuse if noted.

C. Remove and Reinstall: Detach items from existing construction, prepare them for reuse, and reinstall them where indicated.

D. Existing to Remain: Existing items of construction that are not to be removed and that are not otherwise indicated to be removed, removed and salvaged, or removed and reinstalled.

1.3 SUBMITTALS

A. Schedule of Selective Demolition Activities: Indicate detailed sequence of selective demolition and removal work, with starting and ending dates for each activity, interruption of utility services, use of elevator and stairs, and locations of temporary partitions and means of egress.

B. Landfill Records: Indicate receipt and acceptance of hazardous wastes by a landfill facility licensed to accept hazardous wastes.

1.4 QUALITY ASSURANCE

A. Demolition Firm Qualifications: An experienced firm that has specialized in demolition work similar in material and extent to that indicated for this Project.

B. Refrigerant Recovery Technician Qualifications: Certified by an EPA-approved certification program.

C. Regulatory Requirements: Comply with governing EPA notification regulations before beginning selective demolition. Comply with hauling and disposal regulations of authorities having jurisdiction.

D. Standards: Comply with ANSI A10.6 and NFPA 241.

E. Pre-demolition Conference: Conduct conference at Project site.

1.5 PROJECT CONDITIONS

A. Owner will occupy portions of building immediately adjacent to selective demolition area. Conduct selective demolition so Owner's operations will not be disrupted.

B. Conditions existing at time of inspection for bidding purpose will be maintained by Owner as far as practical.

C. Notify Architect of discrepancies between existing conditions and Drawings before proceeding with selective demolition.

D. Hazardous Materials: Hazardous materials are present on the existing site in areas to be selectively demolished. A report on the presence of hazardous materials is included elsewhere in the Contract Documents for review and use. Examine report to become aware of locations where hazardous materials are present.

1. Hazardous material remediation is specified elsewhere in the Contract Documents.
2. Do not disturb hazardous materials or items suspected of containing hazardous materials except under procedures specified elsewhere in the Contract Documents.

E. Storage or sale of removed items or materials on-site is not permitted.

F. Utility Service: Maintain existing utilities indicated to remain in service and protect them against damage during selective demolition operations.

1. Maintain fire-protection facilities in service during selective demolition operations.

1.6 WARRANTY

A. Existing Warranties: Remove, replace, patch, and repair materials and surfaces cut or damaged during selective demolition, by methods and with materials so as not to void existing warranties.

PART 2 - PRODUCTS (Not Used)

PART 3 - EXECUTION

3.1 EXAMINATION

A. Verify that utilities have been disconnected and capped.

B. Survey existing conditions and correlate with requirements indicated to determine extent of selective demolition required.

C. Inventory and record the condition of items to be removed and reinstalled and items to be removed and salvaged.

D. When unanticipated mechanical, electrical, or structural elements that conflict with intended function or design are encountered, investigate and measure the nature and extent of conflict. Promptly submit a written report to Architect.

E. Engage a professional engineer to survey condition of building to determine whether removing any element might result in structural deficiency or unplanned collapse of any portion of structure or adjacent structures during selective demolition operations.

F. Survey of Existing Conditions: Record existing conditions by use of measured drawings and preconstruction photographs.

G. Perform surveys as the Work progresses to detect hazards resulting from selective demolition activities.

3.2 UTILITY SERVICES AND MECHANICAL/ELECTRICAL SYSTEMS

A. Existing Services/Systems: Maintain services/systems indicated to remain and protect them against damage during selective demolition operations.

B. Service/System Requirements: Locate, identify, disconnect, and seal or cap off indicated utility services and mechanical/electrical systems serving areas to be selectively demolished.

1. Arrange to shut off indicated utilities with utility companies.
2. If services/systems are required to be removed, relocated, or abandoned, before proceeding with selective demolition provide temporary services/systems that bypass area of selective demolition and that maintain continuity of services/systems to other parts of building.
3. Cut off pipe or conduit in walls or partitions to be removed. Cap, valve, or plug and seal remaining portion of pipe or conduit after bypassing.

3.3 PREPARATION

A. Site Access and Temporary Controls: Conduct selective demolition and debris-removal operations to ensure minimum interference with roads, streets, walks, walkways, and other adjacent occupied and used facilities.

1. Comply with requirements for access and protection specified in Division 01 Section "Temporary Facilities and Controls."

B. Temporary Facilities: Provide temporary barricades and other protection required to prevent injury to people and damage to adjacent buildings and facilities to remain.

C. Temporary Shoring: Provide and maintain shoring, bracing, and structural supports as required to preserve stability and prevent movement, settlement, or collapse of construction and finishes

to remain, and to prevent unexpected or uncontrolled movement or collapse of construction being demolished.

3.4 SELECTIVE DEMOLITION

A. General: Demolish and remove existing construction only to the extent required by new construction and as indicated. Use methods required to complete the Work within limitations of governing regulations and as follows:

1. Neatly cut openings and holes plumb, square, and true to dimensions required. Use cutting methods least likely to damage construction to remain or adjoining construction. Use hand tools or small power tools designed for sawing or grinding, not hammering and chopping, to minimize disturbance of adjacent surfaces. Temporarily cover openings to remain.
2. Cut or drill from the exposed or finished side into concealed surfaces to avoid marring existing finished surfaces.
3. Do not use cutting torches until work area is cleared of flammable materials. At concealed spaces, such as duct and pipe interiors, verify condition and contents of hidden space before starting flame-cutting operations. Maintain fire watch and portable fire-suppression devices during flame-cutting operations.
4. Locate selective demolition equipment and remove debris and materials so as not to impose excessive loads on supporting walls, floors, or framing.
5. Dispose of demolished items and materials promptly.

B. Removed and Salvaged Items:

1. Clean salvaged items.
2. Pack or crate items after cleaning. Identify contents of containers.
3. Store items in a secure area until delivery to Owner.
4. Transport items to Owner’s storage area as indicated on Drawings.
5. Protect items from damage during transport and storage.

C. Removed and Reinstalled Items:

1. Clean and repair items to functional condition adequate for intended reuse. Paint equipment to match new equipment.
2. Pack or crate items after cleaning and repairing. Identify contents of containers.
3. Protect items from damage during transport and storage.
4. Reinstall items in locations indicated. Comply with installation requirements for new materials and equipment. Provide connections, supports, and miscellaneous materials necessary to make item functional for use indicated.

D. Existing Items to Remain: Protect construction indicated to remain against damage and soiling during selective demolition. When permitted by Architect, items may be removed to a suitable, protected storage location during selective demolition, cleaned and reinstalled in their original locations after selective demolition operations are complete.

3.5 DISPOSAL OF DEMOLISHED MATERIALS

A. General: Except for items or materials indicated to be recycled, reused, salvaged, reinstalled, or otherwise indicated to remain Owner's property, remove demolished materials from Project site and legally dispose of them in an EPA-approved landfill.

B. Burning: Do not burn demolished materials.

C. Disposal: Transport demolished materials off Owner's property and legally dispose of them.

3.6 CLEANING

A. Clean adjacent structures and improvements of dust, dirt, and debris caused by selective demolition operations. Return adjacent areas to condition existing before selective demolition operations began.

END OF SECTION 02 41 19

PART 1 - GENERAL

1.1 DESCRIPTION

A. This section contains requirements for the installation of a sub-slab vapor mitigation system.

B. The purpose of the sub-slab vapor mitigation system is to prevent potential intrusion of petroleum and chlorinated vapors from impacted soil and groundwater into the building.

1.2 DEFINITIONS

A. CAULKS AND SEALANTS - those materials which will significantly reduce the flow of gases through small openings in the building shell.

B. CONDITIONED SPACE - all spaces which are provided with heated and/or cooled air or which are maintained at temperatures over 50 deg. F during the heating season, including adjacent connected spaces separated by an un-insulated component (e.g. basements, utility rooms, garages, corridors).

C. CONTRACTOR - a building trades professional licensed by the state.

D. DEPRESSURIZATION - a condition that exists when the measured air pressure is lower than the reference air pressure.

E. ELASTOMERIC - that property of macromolecular material of returning rapidly to approximately the initial dimensions and shape, after substantial deformation by a weak stress and release of stress.

F. Mil - 1mil=1/1000 of a meter

G. MITIGATION - The act of making less severe, reducing or relieving.

H. OUTSIDE AIR - air taken from the outdoors and, therefore, not previously circulated through the system.

I. SOIL DEPRESSURIZATION SYSTEM - a system designed to withdraw air below the slab through means of a vent pipe and fan arrangement or venting turbine.

J. SOIL GAS - gas which is always present underground, in the small spaces between particles of the soil or in crevices in rock. Major natural constituents of soil gas include nitrogen, water vapor, carbon dioxide, and (near the surface) oxygen. Contaminants which may be present in the soil gas include volatile petroleum constituents such as benzene, toluene, ethylbenzene and xylenes (BTEX) and chlorinated solvents such as 1,2-dichloroethene.

K. VAPOR BARRIER – High density polyethylene (HDPE) flexible sheet material; or other system of materials placed between the soil and/or gravel sub-base and the building for the purpose of reducing the flow of soil gas into the building.

L. VENTILATION - the process of supplying or removing air, by natural or mechanical means, to or from any space. Such air may or may not have been conditioned.

1.3 SCOPE OF WORK

A. Subgrade soil shall be excavated to a minimum depth of 4-inches below the bottom of the ground floor slab and any shallow foundation components and 16-inches in the area of the vapor laterals.. It should be noted that if impacted soil is encountered during excavation activities of the vapor mitigation piping, footers, grade beams, and installation of utilities it is to be disposed of off-site at an approved North Carolina Department of Environmental and Natural Resources (NCDENR) approved facility.

B. Install a minimum 4-inch thick granular blanket beneath the entire building slab. The granular blanket may be constructed of coarse sand, pea gravel, or other self-compacting material having an in-place hydraulic conductivity of greater than 1 x 10-3 cm/sec. If Geo-seal Vapor Vent® is to be used for horizontal gas collection, it shall be installed approximately centered in the gravel layer.

C. The base of the excavation shall be sloped in accordance with the grading plan to prevent ponding of water in the subgrade. Therefore, the thickness of the gravel blanket may vary but shall be at least 4-inches.

D. Vapor recovery piping shall be installed horizontally beneath the building slab near **Columns G and M** as indicated on **Figure 1**. However, a recovery pipe shall be installed within each column line if grade beams or other subsurface impediments are present which may prevent vapor flow between recovery pipes. Install horizontal vapor recovery piping within the vapor lateral trenches and granular blanket (**Figures 2 through 5**). The vapor recovery piping shall be constructed of 4-inch diameter Schedule 40 PVC flush threaded well screen. The well screen will be machine slotted with at least a 0.040 inch slot size, and covered with a geotextile sock.

E. The vapor recovery piping/Vapor Vent shall be connected to a common riser, which shall be run inside the building within a utility corridor. The vapor recovery riser shall terminate in a vent, which shall extend a minimum of 2 feet above the top of the building and shall be capped with a turbine. The vent stack will be installed to meet all of the following requirements:

(1) be ten feet or more from any window, door, or other opening (e.g., operable skylight, or air intake) into conditioned spaces of the structure,

(2) be ten feet or more from any opening into an adjacent building. The total required distance (ten feet) from the point of discharge to openings in the structure shall be measured either directly between the two points or be the sum of measurements made around intervening obstacles. If the

point of discharge is at or below any window, door, or other opening into conditioned spaces of the structure the total required distance (ten feet) shall be measured horizontally between the two points.

F. The passive vapor recovery system should be installed to allow easy conversion to an active recovery system, if this ever should become necessary. Conversion of the system to active would require the installation of a vacuum blower or fan on the vent stack.

G. A composite vapor barrier, Geo-seal® or equivalent shall be installed immediately above the granular blanket and below the concrete slab. The vapor barrier should extend beneath the entire building slab.

H. All utility penetrations through the vapor barrier shall be sealed to the extent possible. Overlapping joints in the vapor barrier shall be applied and sealed per manufacturer's instructions.

1.4 DELIVERY, STORAGE AND HANDLING

A. Deliver materials to site in original unbroken packages bearing manufacturers label showing brand, weight, volume, and batch number. Store materials at the site in strict compliance with the manufacturer's printed instructions.

1.5 JOB CONDITIONS

A. Protect all adjacent areas not to receive gas vapor barrier. Where necessary, apply masking to prevent staining of surfaces to remain exposed wherever membrane abuts to other finish surfaces.

B. Perform work only when existing and forecasted weather conditions are within manufacturer's recommendations for material and product used.

C. Minimum clearance required for application of product: 90° spray wand- 2 feet / Conventional spray wand- 4 feet.

D. Ambient temperature for application of the vapor mitigation system shall be in accordance with the manufacturer's printed installation instructions.

E. All plumbing, electrical, mechanical and structural items to be under or passing through the gas vapor barrier shall be positively secured in their proper positions and appropriately protected prior to membrane application.

F. Vapor barrier shall be installed before placement of reinforcing steel. When not possible, all exposed reinforcing steel shall be masked prior to membrane application.

G. Surface preparation shall be in accordance with the manufacturer's printed installation instructions.

PART 2 - PRODUCTS

2.1 PERMEABLE BACKFILL MATERIAL

A. Permeable backfill shall consist of self-compacting import soil having a compacted permeability of no less than 1 x 10-3 cm/sec. Acceptable materials are:

1. 57 stone.
2. Pea gravel.

2.2 VAPOR BARRIER

A. The vapor barrier will consist of a 3-part Geo-Seal® system or engineer approved equivalent consisting of a Geo-Seal base layer, 60 mils of Geo-Seal Core, and an upper layer of Geo-Seal Bond. The vapor barrier shall form a continuous barrier to prevent migration of underlying petroleum constituents in the soil gas from migrating into the building. Manufactured by Land Science Technologies, San Clemente, CA (949) 481-8118.

B. The vapor barrier installer must provide demonstrated experience installing these products on at least 10 similar structures in the past 5 years.

C. Required vapor barrier physical properties:

Geo-Seal CORE– TYPICAL CURED PROPERTIES

Properties	**Test Method**	**Results**
Tensile Strength – Core Only	ASTM 412	32 psi
Tensile Strength – Geo-Seal System	ASTM 412	662 psi
Elongation	ASTM 412	4140%
Resistance to Decay	ASTM E 1545 Section 13	4% Perm Loss
Accelerated Aging	ASTM G 23	No Effect
Moisture Vapor Transmission	ASTM E 96	0.026 $g/ft^2/hr$
Hydrostatic Water Pressure	ASTM D 751	26 psi
Perm Rating (US Perms)	ASTM E 96	0.21
Methane Transmission Rate	ASTM D 1434	Passed
Adhesion to Concrete & Masonry	ASTM C 836	11 lbf./inch
Hardness	ASTM C 836	80
Crack Bridging	ASTM C 836	No Cracking
Heat Aging	ASTM D 4068	Passed
Environmental Stress Cracking	ASTM D 1693	Passed
Oil Resistance	ASTM D 543	Passed
Soil Burial	ASTM D 4068	Passed
Low Temp. Flexibility	ASTM C 896-00	No Cracking at -20^0C
Resistance to Acids:		
Acetic		30%
Sulfuric and Hydrochloric		13%
Temperature Effect		
Stable		248^0F
Flexible		13^0F

Geo-Seal CORE Detail – TYPICAL CURED PROPERTIES

Properties	Test Method	Results
Tensile Strength	ASTM 412	32 psi
Elongation	ASTM 412	3860%
Resistance to Decay	ASTM E 1545 Section 13	9% Perm Loss
Accelerated Aging	ASTM G 23	No Effect
Moisture Vapor Transmission	ASTM E 96	0.026 g/ft^2/hr
Hydrostatic Water Pressure	ASTM D 751	28 PSI
Perm Rating (US Perms)	ASTM E 96	0.17
Methane Transmission Rate	ASTM D 1434	Passed
Adhesion to Concrete & Masonry	ASTM C 836	7 lbf./inch
Hardness	ASTM C 836	85
Crack Bridging	ASTM C 836	No Cracking
Low Temp. Flexibility	ASTM C 896-00	No Cracking at -20^{0}C
Resistance to Acids:		
Acetic		30%
Sulfuric and Hydrochloric		13%
Temperature Effect		
Stable		248^{0}F
Flexible		13^{0}F

Geo-Seal BOND and Geo-Seal BASE physical properties.

Properties	Test Method	Results
Film Thickness		5 mil
Composite Thickness		18 mil
Water Vapor Permeability	ASTM E 96	0.214
Adhesion to Concrete	ASTM D 1970	9.2 lbs/inch^2
Dart Impact	ASTM D 1790	>1070 gms, method A
		594 gms, method B
Puncture Properties Tear	ASTM B 2582 MD	11,290 gms
	ASTM B 2582 TD	13,150 gms

AXILLARY MATERIALS

Geo-Seal FILM-11 may be used in lieu of, or in addition to, the standard Geo-Seal BASE and Geo-Seal BOND material when project conditions require a higher level of chemical resistance or greater durability is required. Contact Land Science Technologies for the proper recommendation and approval.

Properties	Test Method	Results
Film Thickness		11 mil
Classification	ASTM E 1745-09	Exceed Class A,B and C
Tensile	ASTM E 154-93	45 lbs / in
Puncture Resistance	ASTM D 1709	2400 grams
Water Vapor Permeance	ASTM E 96	0.020 Perms
Life Expectancy	ASTM E 154-93	Indefinite
Chemical Resistance	ASTM E 154-93	Excellent

D. Seam Detailing Sealant Mastic: Geo-Seal CORE Detail, a high or medium viscosity polymer modified water based asphalt material.

E. Sheet Flashing: 60-mil reinforced modified asphalt sheet good with double-sided adhesive.

F. Reinforcing Strip: Manufacturer's recommended polypropylene and polyester fabric.

2.3 VAPOR PIPING

A. Horizontal (i.e., slotted) vapor piping shall consist of 4-inch diameter, Schedule 40 flush-threaded PVC, factory-slotted well screen (0.040 inch slot size), or Geo-seal® Vapor Vent.

B. If used, horizontal vapor piping shall be wrapped in geotextile fabric (sock); Vapor Vent does not require wrapping.

C. Vertical (i.e., non-slotted) vapor piping shall be 4-inch diameter, Schedule 40 PVC piping or piping approved by local building and/or fire codes.

2.4 CAULKS, SEALANTS and TAPES

A. All caulks and sealants shall be resistant to petroleum and chlorinated solvent vapors.

B. Acceptable caulks and sealants shall conform with ASTM C920-87 "Standard Specifications for Elastomeric Joint Sealants" and ASTM C962-86 "Standard Guide for Use of Elastomeric Joint Sealants".

C. All sealant materials and methods of application shall be compatible with the location, function and material of the surface or surfaces being sealed.

D. Caulks and sealants shall be applied in accordance with manufacturer's directions.

E. Tapes used as a sealant shall be resistant to petroleum and chlorinated solvent vapors and shall have a permeability of less than 10-6 cm/sec.

2.5 PRODUCT WARRANTY

A. Upon delivery and acceptance, the materials manufacturer and installer will provide a written one year standard material indicating the material conforms to the specifications and is free of material defects.

B. Manufacturer/installer will provide replacement material and reinstallation labor, at no charge, for products that do not meet the material properties specified, and described herein.

C. The Installer shall warrant the vapor barrier against defective workmanship, materials, design and installation for a period of one year from the date of substantial completion of the work. Upon receipt of notice from the Owner of failure of any part of the system during the warranty period, the affected part of materials shall be replaced promptly with new parts by and at the expense of the Installer.

PART 3 - EXECUTION

3.1 EXCAVATION

A. Contractor shall excavate soil beneath the building slab to a minimum depth of 4-inches below the bottom of the slab. Trenches shall also be excavated to accommodate horizontal vent piping as shown on attached drawings. *Refer to Master Specification for additional details regarding the excavation of soil within the slab area.*

3.2 INSTALLATION OF PERMEABLE BACKFILL

A. Permeable backfill material shall be installed beneath each building slab to a minimum depth of 4-inches below the bottom of the slab. Trenches shall also be excavated to accommodate horizontal vent piping as shown on attached drawings. *Refer to Master Specification for additional details regarding the installation of permeable backfill within the slab area.*

B. The vapor barrier and vapor recovery piping shall be installed within the backfill material as directed in Sections 3.3 and 3.4.

C. The backfill shall be placed in a controlled manner to avoid crushing of the vapor recovery piping.

3.3 INSTALLATION OF VAPOR PIPING

A. If 4-inch diameter slotted piping is used as horizontal vent piping, it shall be installed within middle of the trenches to ensure 4-inches of permeable backfill layer cover above and below the piping. If Vapor Vent is used for vapor collection, it shall be installed approximately centered within the permeable backfill layer (**See Figures 2 through 5**).

B. End caps are to be installed on the end of each vapor lateral not connected to the Vapor riser pipe (**See Figure 1**).

C. Vent piping/Vapor Vent shall be installed horizontally throughout the foot-print of the building area as shown on provided drawings. However, in the event that grade beams or underground obstructions will present a barrier to the lateral flow of air between horizontal piping sections, spacing shall be decreased to allow at least 1 pipe per column line.

D. The system shall be constructed and installed so that no portion will allow the excess accumulation of condensation.

E. The vent pipe shall be terminated in a location that will minimize human exposure to the exhaust air. Locations shall be above the eave of the roof. To prevent exposure to vented soil vapor, the point of discharge from vent shall meet all of the following requirements:

1. be ten feet or more from any window, door, or other opening (e.g., operable skylight, or air intake) into conditioned spaces of the structure,
2. Be ten (10) feet or more from any window, door, or other opening (e.g., operable skylight, or air intake) into conditioned spaces of the structure, and
3. Be ten (10) feet or more from any opening into an adjacent building. The total required distance (ten feet) from the point of discharge to openings in the structure shall be measured either directly between the two points or be the sum of measurements made around intervening obstacles. If the point of discharge is at or below any window, door, or other opening into conditioned spaces of the structure the total required distance (ten feet) shall be measured horizontally between the two points.

F. All exposed components of the sub-slab vapor mitigation system shall be labeled "Soil Gas System" to prevent accidental damage or misuse. Labels shall be on a yellow band, two inches wide and spaced three feet apart on all components.

G. All vent piping shall be located in compliance with existing and applicable codes, with regards to clearances from mechanical equipment and flues and notching of structural members. No vent shall penetrate a fire wall or party wall.

H. Vent pipe shall be fastened to the structure of the building with hangers, strapping, or other supports that will adequately secure the vent material. Plumbing pipes, ducts, or mechanical equipment shall not be used to support or secure a vent pipe.

I. Supports for the vertical vent pipe shall be installed at least every 6 feet on horizontal runs. Vertical runs shall be secured either above or below the points of penetration through floors, ceilings, and roof, or at least every 8 feet on runs that do not penetrate floors, ceilings, or roof or as local/state or federal codes require.

J. Vent pipe shall be installed in a configuration that ensures that any rain water or condensation within the pipes drains downward into the ground beneath the slab or soil-gas barrier.

K. The vent pipe shall be capped at the terminus with a minimum 4-inch diameter, galvanized venting turbine, which is capable of operating in low-wind conditions. The ventilator shall be a Model PT4A-4" ventilator, manufactured by WSM Company, or equivalent.

L. Vent pipe shall not block access to any areas requiring maintenance or inspection. The vent shall not be installed in front of or interfere with any light, opening, door, window or equipment access area required by code.

M. Cleaning solvents and adhesives used to join plastic pipes and fittings shall be as recommended by manufacturer's for use with the type of pipe material used in the mitigation system. Cleaning solvents and adhesives are to contain no volatile organic compounds (VOCs) or low concentrations of VOCs.

3.4 INSTALLATION OF VAPOR BARRIER

3.4.1 Preparation

A. All surfaces to receive gas vapor barrier shall be inspected and approved by the applicator at least one day prior to commencing work.

B. Provide 24 inch minimum clearance out from surfaces to receive the gas vapor barrier. The application surface shall be prepared and provided to the applicator in accordance with manufacturer's specifications.

C. Concrete or Masonite surfaces shall be light broom finish or smoother, free of any dirt, debris, loose material, release agents or curing compounds. Fill all voids more than ¼ inch deep and 1/4 inch wide. Masonry joints, cold joints, and form joints shall be struck smooth. All penetrations shall be prepared in accordance with manufacturer's specifications. Provide a 3/4 inch minimum cant of Geo-Seal, or other suitable material as approved by manufacturer, at all horizontal to vertical transitions and other inside corners of 120° or less. Allow to cure overnight before the application of Geo-Seal. All cracks or cold joints greater than 1/16 inch must be completely grouted with non-shrink grout as approved by engineer. Install Hardcast reinforcing tape over all cold joints, cracks and form tie holes (after holes and cracks are grouted).

D. Dirt sub-grade shall be moisture conditioned and compacted to a minimum relative compaction of 90 percent or as specified by civil/geotechnical engineer. The finished surface shall be smooth, uniform, free of debris and standing water. Remove all stones or dirt clods greater than 1/4 inch. Penetrations shall be prepared in accordance with manufacturer's specifications. All form stakes that penetrate the membrane shall be of rebar which shall be bent over and left in the slab.

E. Trenches shall be cut oversize to accommodate gas vapor barrier membrane and protection course with perpendicular to sloped sides and maximum obtainable compaction. Adjoining grade shall be finish graded and compacted. Excavated walls shall be vertical or sloped back, free of roots and protruding rocks. Specific sub-grade preparation shall be designed by a qualified civil or geotechnical engineer. If organic materials with potential for growth (ie: seeds or grasses) exist within the sub-base, spray apply soil sterilant at the sterilant manufacturer's recommended rate.

3.4.2 Geo-Seal Installation

A. GEO-SEAL BASE LAYER INSTALLATION

1. Install the Geo-Seal BASE layer over substrate material in one direction with six-inch overlaps and the geotextile (fabric side) facing down.
2. Secure the Geo-Seal BASE seams by applying 60 mils of Geo-Seal CORE between the 6" overlapped sheets with the geotextile side down.
3. Visually verify there are no gaps/fish-mouths in seams.
4. For best results, install an equal amount of Geo-Seal BASE and Geo-Seal CORE in one day. Leaving unsprayed Geo-Seal BASE overnight might allow excess moisture to collect on the Geo-Seal BASE. If excess moisture collects, it needs to be removed.

NOTE: In windy conditions it might be necessary to encapsulate the seam by spraying the Geo-Seal CORE layer over the completed Geo-Seal BASE seam.

B. GEO-SEAL CORE APPLICATION

1. Set up spray equipment according to manufacturer's instructions.
2. Mix and prepare materials according to manufacturer's instructions.
3. The two catalyst nozzles (8001) should be adjusted to cross at about 18" from the end of the wand. This apex of catalyst and emulsion spray should then be less than 24" but greater than 12" from the desired surface when spraying. When properly sprayed the fan pattern of the catalyst should range between 65° and 80°.
4. Adjust the amount of catalyst used based on the ambient air temperature and surface temperature of the substrate receiving the membrane. In hot weather use less catalyst as hot conditions will quickly "break" the emulsion and facilitate the curing of the membrane. In cold conditions and on vertical surfaces use more catalyst to "break" the emulsion quicker to expedite curing and set up time in cold conditions.
5. To spray the Geo-Seal CORE layer, pull the trigger on the gun. A 42° fan pattern should form when properly sprayed. Apply one spray coat of Geo-Seal CORE to obtain a seamless membrane free from pinholes or shadows, with an average dry film thickness of 60 mils (1.52 mm).
6. Apply the Geo-Seal CORE layer in a spray pattern that is perpendicular to the application surface. The concern when spraying at an angle is that an area might be missed. Using a

perpendicular spray pattern will limit voids and thin spots, and will also create a uniform and consistent membrane.

7. Verify film thickness of vapor intrusion barrier every 500 ft^2. (46.45 m^2), for information regarding Geo-Seal quality control measures, refer to the quality control procedures in Section 3.9 of this specification.
8. The membrane will generally cure in 24 to 48 hours. As a rule, when temperature decreases or humidity increases, the curing of the membrane will be prolonged. The membrane does not need to be fully cured prior the placement of the Geo-Seal BOND layer, provided mil thickness has been verified and a smoke test will be conducted.
9. **Do not penetrate** membrane after it has been installed. If membrane is penetrated after the membrane is installed, it is the responsibility of the general contractor to notify the certified installer to make repairs.
10. If applying to a vertical concrete wall, apply Geo-Seal CORE directly to concrete surface and use manufacturer's recommended protection material based on site specific conditions. If applying Geo-Seal against shoring, contact manufacturer for site specific installation instructions.

NOTE: Care should be taken to not trap moisture between the layers of the membrane. Trapping moisture may occur from applying a second coat prior to the membrane curing. Repairs and detailing may be done over the Geo-Seal CORE layer when not fully cured.

C. GEO-SEAL BOND PROTECTION COURSE INSTALLATION

1. Install Geo-Seal BOND protection course perpendicular to the direction of the Geo-Seal BASE course with overlapped seams over nominally cured membrane no later than recommended by manufacturer and before starting subsequent construction operations.
2. Sweep off any water that has collected on the surface of the Geo-Seal CORE layer, prior to the placement of the Geo-Seal BOND layer.
3. Overlap and seam the Geo-Seal BOND layer in the same manner as the Geo-Seal BASE layer.
4. To expedite the construction process, the Geo-Seal BOND layer can be placed over the Geo-Seal CORE immediately after the spray application is complete, provided the Geo-Seal CORE mil thickness has been verified.

3.4.3 SEALING AROUND PENETRATIONS

A. All pipe penetrations should be securely in place prior to the installation of the Geo-Seal system. Any loose penetrations should be secured prior to Geo-Seal application, as loose penetrations could potentially exert pressure on the membrane and damage the membrane after installation.

B. To properly seal around penetrations, cut a piece of the Geo-Seal BASE layer that will extend 6" beyond the outside perimeter of the penetration. Cut a hole in the Geo-Seal BASE layer just big enough to slide over the penetration, ensuring the Geo-Seal BASE layer fits snug against the penetration, this can be done by cutting an "X" no larger than the inside diameter of the penetration. There should not be a gap larger than a 1/8" between the Geo-Seal BASE layer and the penetration. Other methods can also be utilized, provided, there is not a gap larger than 1/8" between the Geo-Seal BASE layer and the penetration.

C. Seal the Geo-Seal BASE layer using Geo-Seal CORE or Geo-Seal CORE Detail to the underlying Geo-Seal BASE layer.

D. Apply one coat of Geo-Seal CORE Detail or Geo-Seal CORE spray to the Geo-Seal BASE layer and around the penetration at a thickness of 30 mils. Penetrations should be treated in a 6-inch radius around penetration and 3 inches onto penetrating object.

E. Embed a fabric reinforcing strip after the first application of the Geo-Seal CORE spray or Geo-Seal CORE Detail material and then apply a second 30 mil coat over the embedded joint reinforcing strip ensuring its complete saturation of the embedded strip and tight seal around the penetration.

F. After the placement of the Geo-Seal BOND layer, a cable tie should then be placed around the finished penetration. The cable tie should be snug, but not overly tight so as to slice into the finished seal.

OPTION: A final application of Geo-Seal CORE may be used to provide a finishing seal after the Geo-Seal BOND layer has been installed.

NOTE: Metal or other slick penetration surfaces may require treatment in order to achieve proper adhesion. For plastic pipes, sand paper may be used to achieve a profile, an emery cloth is more appropriate for metal surfaces. An emery cloth should also be used to remove any rust on metal surfaces.

3.4.4 PREPARATIONS AND TREATMENT OF TERMINATIONS

A. Prepare the substrate surface in accordance with Section 3.3 of this document. Concrete surfaces that are not a light trowel, light broom or equivalent finish, will need to be repaired.

B. Terminations on horizontal and vertical surfaces should extend 6" onto the termination surface. Job specific conditions may prevent a 6" termination. In these conditions, contact manufacturer for recommendations.

C. Apply 30 mils of Geo-Seal CORE to the terminating surface and then embed the Geo-Seal BASE layer by pressing it firmly into the Geo-Seal CORE layer. Next, apply 60 mils of Geo-Seal CORE to the BASE layer. When complete, apply the Geo-Seal BOND layer. After the placement of the Geo-Seal BOND layer is complete, apply a final 30 mil seal of the Geo-Seal CORE layer over the edge of the termination. For further clarification, refer to the termination detail provided by manufacturer.

D. The stated termination process is appropriate for terminating the membrane onto exterior footings, pile caps, interior footings and grade beams. When terminating the membrane to stem walls or vertical surfaces the same process should be used.

3.4.5 FIELD QUALITY CONTROL

A. The Geo-Seal system must be installed by a trained and certified installer approved by Land Science Technologies.

B. For projects that will require a material or labor material warranty, Land Science Technologies will require a manufacturer's representative or certified 3rd party inspector to inspect and verify that the membrane has been installed per the manufacturer's recommendations. The certified installer is responsible for contacting the inspector for inspection. Prior to application of the membrane, a notice period for inspection should be agreed upon between the applicator and inspector.

C. The measurement tools listed below will help verity the thickness of the Geo-Seal CORE layer. As measurement verification experience is gained, these tools will help confirm thickness measurements that can be obtained by pressing one's fingers into the Geo-Seal CORE membrane.

To verify the mil thickness of the Geo-Seal CORE, the following measurement devices are required.

1. Mil reading caliper: Calipers are used to measure the thickness of coupon samples. To measure coupon samples correctly, the thickness of the Geo-Seal sheet layers (18 mils each) must be taken into account. Mark sample area for repair.
2. Wet mil thickness gauge: A wet mil thickness gauge may be used to quickly measure the mil thickness of the Geo-Seal CORE layer. The thickness of the Geo-Seal sheet layers do not factor into the mil thickness reading.

NOTE: When first using a wet mil thickness gauge on a project, collect coupon samples to verify the wet mil gauge thickness readings.

3. Needle nose digital depth gauge: A needle nose depth gauge should be used when measuring the Geo-Seal CORE thickness on vertical walls or in field measurements. Mark measurement area for repair.

   To obtain a proper wet mil thickness reading, take into account the 5 to 10 percent shrinkage that will occur as the membrane fully cures. Not taking into account the thickness of the sheet layers, a freshly sprayed membrane should have a minimum wet thickness of 63 (5%) to 66 (10%) mils.

   Methods on how to properly conduct Geo-Seal CORE thickness sampling can be obtained by reviewing literature prepared by Land Science Technologies.

D. It should be noted that taking too many destructive samples can be detrimental to the membrane. Areas where coupon samples have been removed need to be marked for repair.

E. Smoke Testing is highly recommended and is the ideal way to test the seal created around penetrations and terminations. Smoke Testing is conducted by pumping non-toxic smoke underneath the Geo-Seal vapor intrusion barrier and then repairing the areas where smoke appears. Refer to smoke testing protocol provided by Land Science Technologies. For projects that will require a material or labor material warranty, Land Science Technologies will require a smoke test.

F. Visual inspections prior to placement of concrete, but after the installation of concrete reinforcing, is recommended to identify any punctures that may have occurred during the installation of rebar, post tension cables, etc. Punctures in the Geo-Seal system should be easy to identify due to the color contrasting layers of the system.

G. Any sump located in a conditioned portion of a building, or in an enclosed space directly attached to a conditioned portion of a building, shall be covered by a lid. An air tight seal shall be formed between the sump and lid and at any wire or pipe penetrations.

- - - E N D - - -

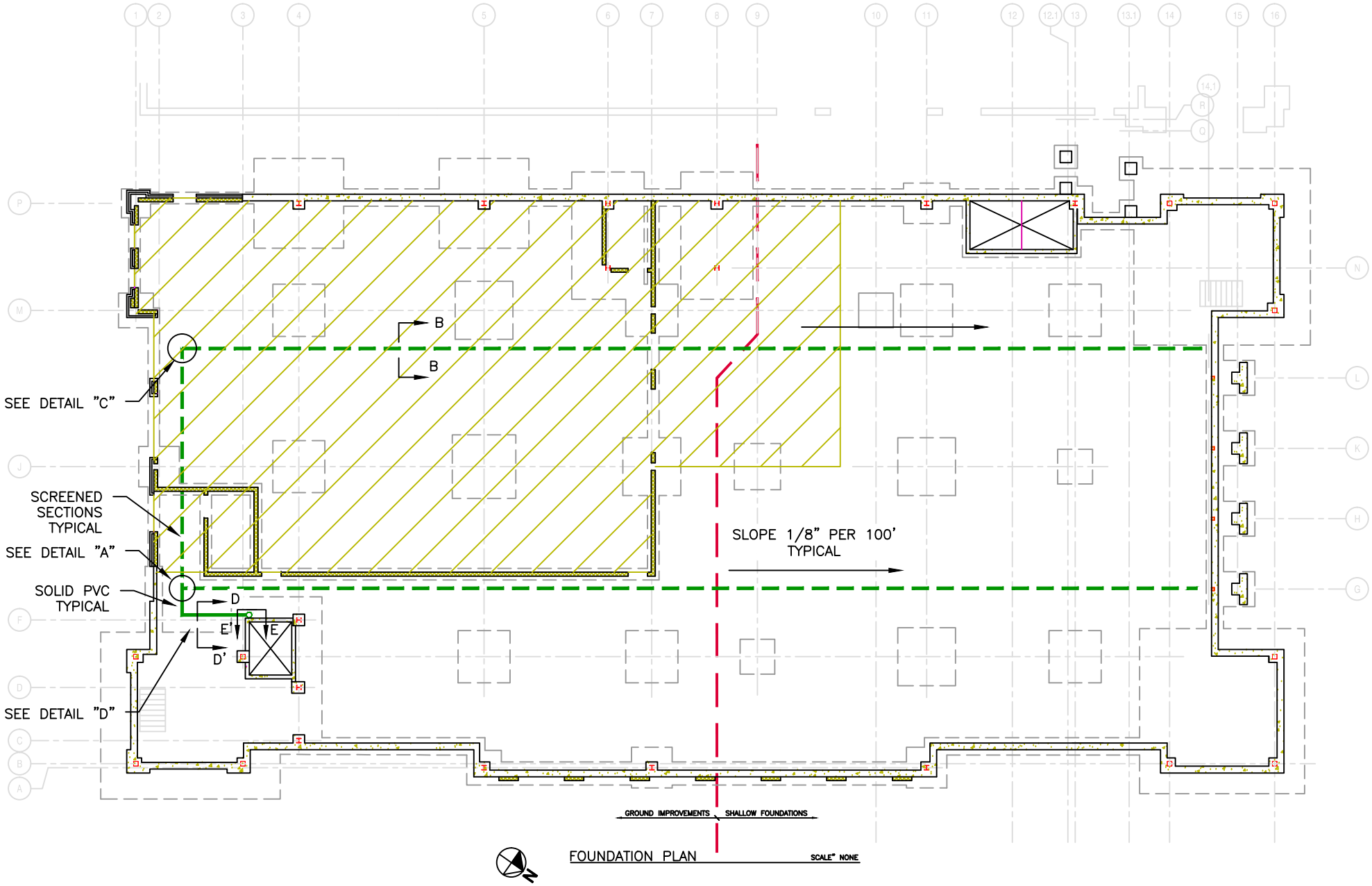

psi Information To Build On Engineering • Consulting • Testing	Environmental Services 5021 West W.T. Harris Blvd. Charlotte, NC 28269 (704) 598-2234 Fax (704) 598-2236	Proposed Sub-Slab Mitigation System Concord City Hall Cabarrus Avenue West & Market Street SW Concord, North Carolina 28025	Checked: B. Lucas	Scale: See Dwg.	Date: May 22, 2014	Figure: 1
			Drawn: C. Moran 0511105-1a prelim lat det.dwg	Project Number: 0457510-2		

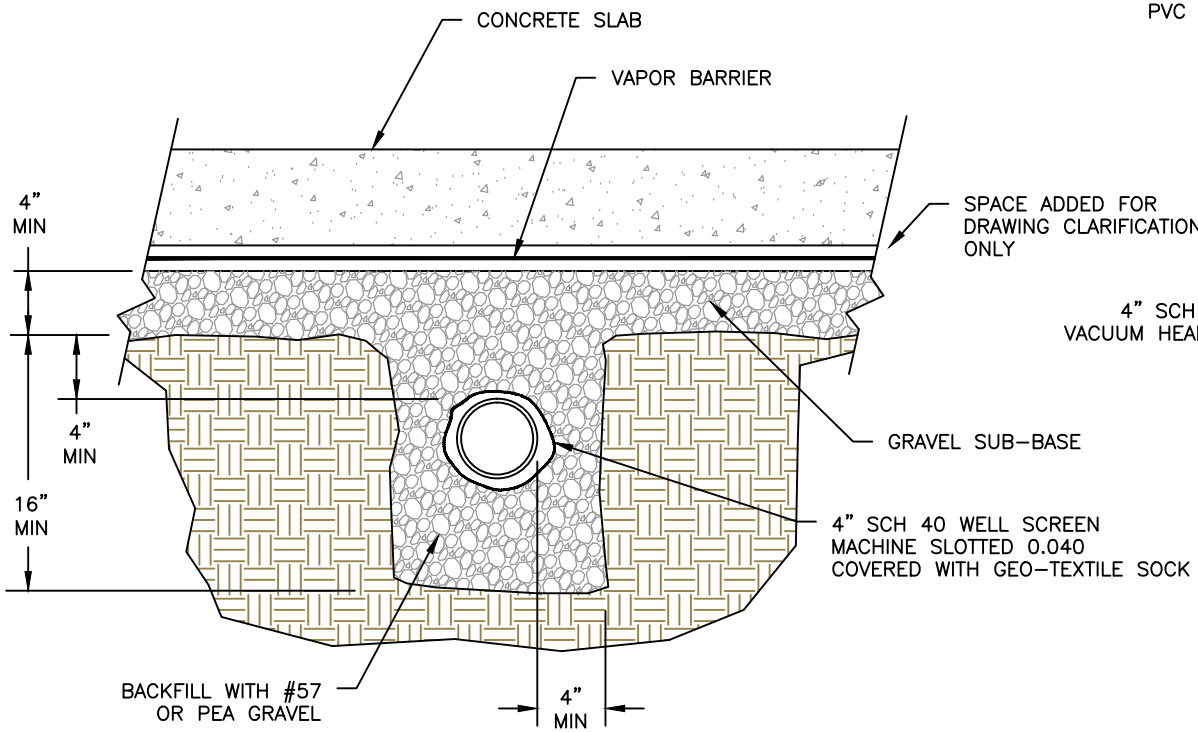

Cross-Section B-B'
Typical Vapor Line below Slab

Scale: 1" = 1'-0"

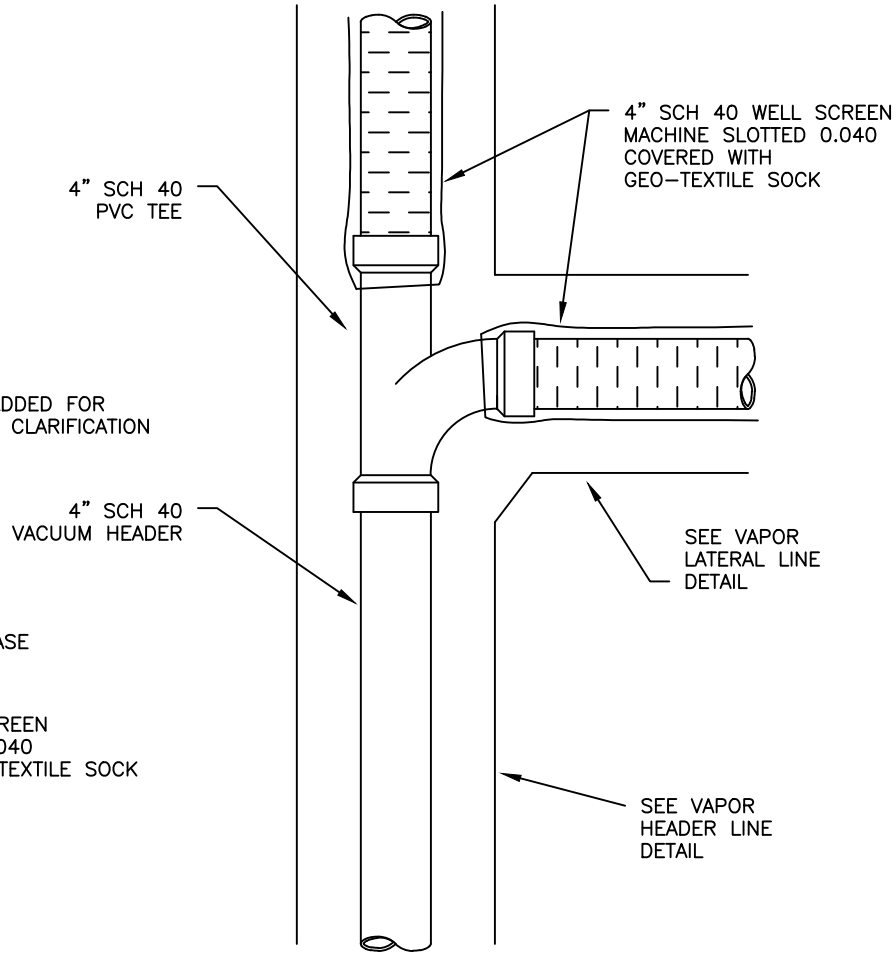

Detail "A" Vacuum Header Tee

Scale: 1" = 1'-0"

psi Information To Build On Engineering • Consulting • Testing	Environmental Services 5021 West W.T. Harris Blvd. Charlotte, NC 28269 (704) 598-2234 Fax (704) 598-2236	Proposed Sub-Slab Mitigation System - System Details Concord City Hall Cabarrus Avenue West & Market Street SW Concord, North Carolina 28025	Checked: B. Lucas	Scale: See Dwg.	Date: May 22, 2014	Figure: 2
			Drawn: C. Moran 0511105-1a prelim lat det.dwg	Project Number: 0457510-2		

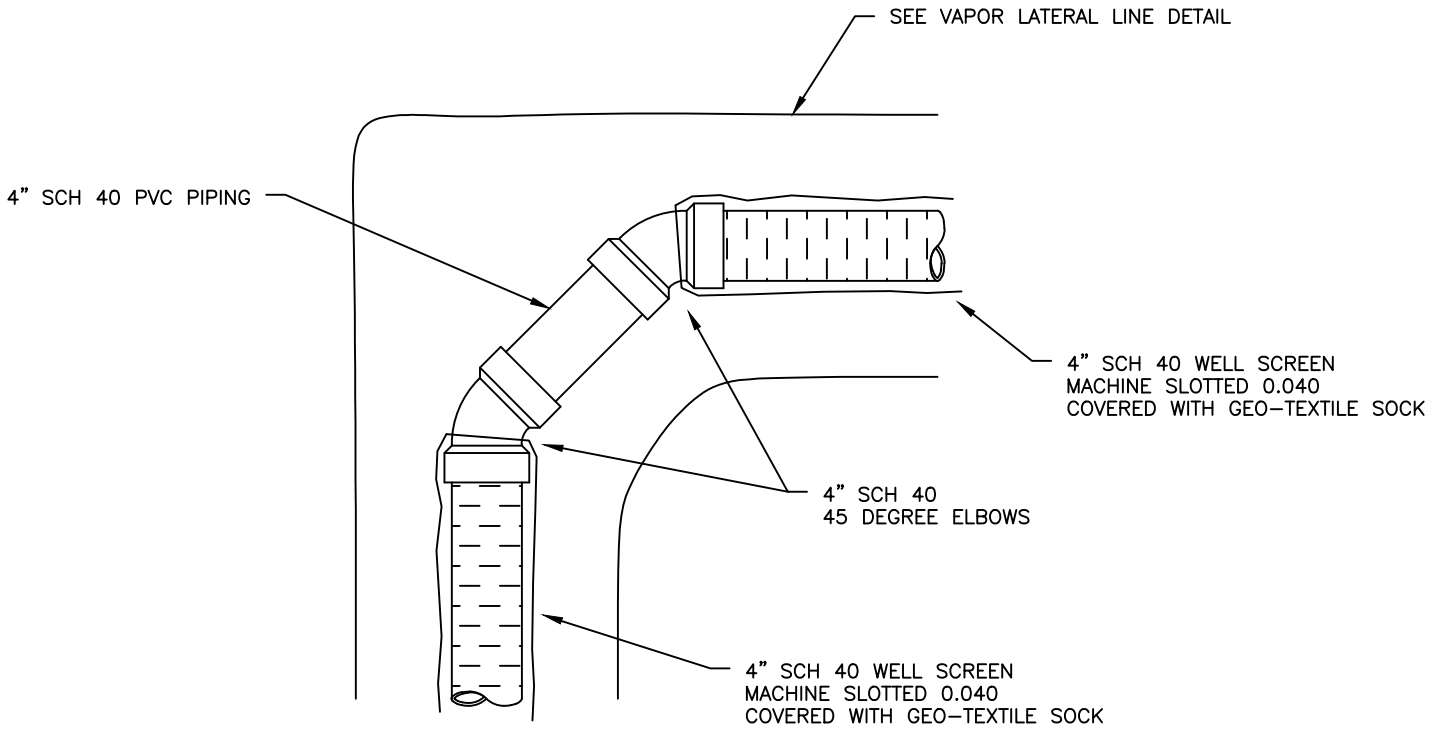

Detail "C"
Vapor Header Corner

Scale: 1" = 1'-0"

psi Information To Build On Engineering • Consulting • Testing	Environmental Services 5021 West W.T. Harris Blvd. Charlotte, NC 28269 (704) 598-2234 Fax (704) 598-2236	Proposed Sub-Slab Mitigation System - System Details Concord City Hall Cabarrus Avenue West & Market Street SW Concord, North Carolina 28025	Checked: B. Lucas	Scale: See Dwg.	Date: May 22, 2014	Figure: 3
			Drawn: C. Moran 0511105-1a prelim lat det.dwg	Project Number: 0457510-2		

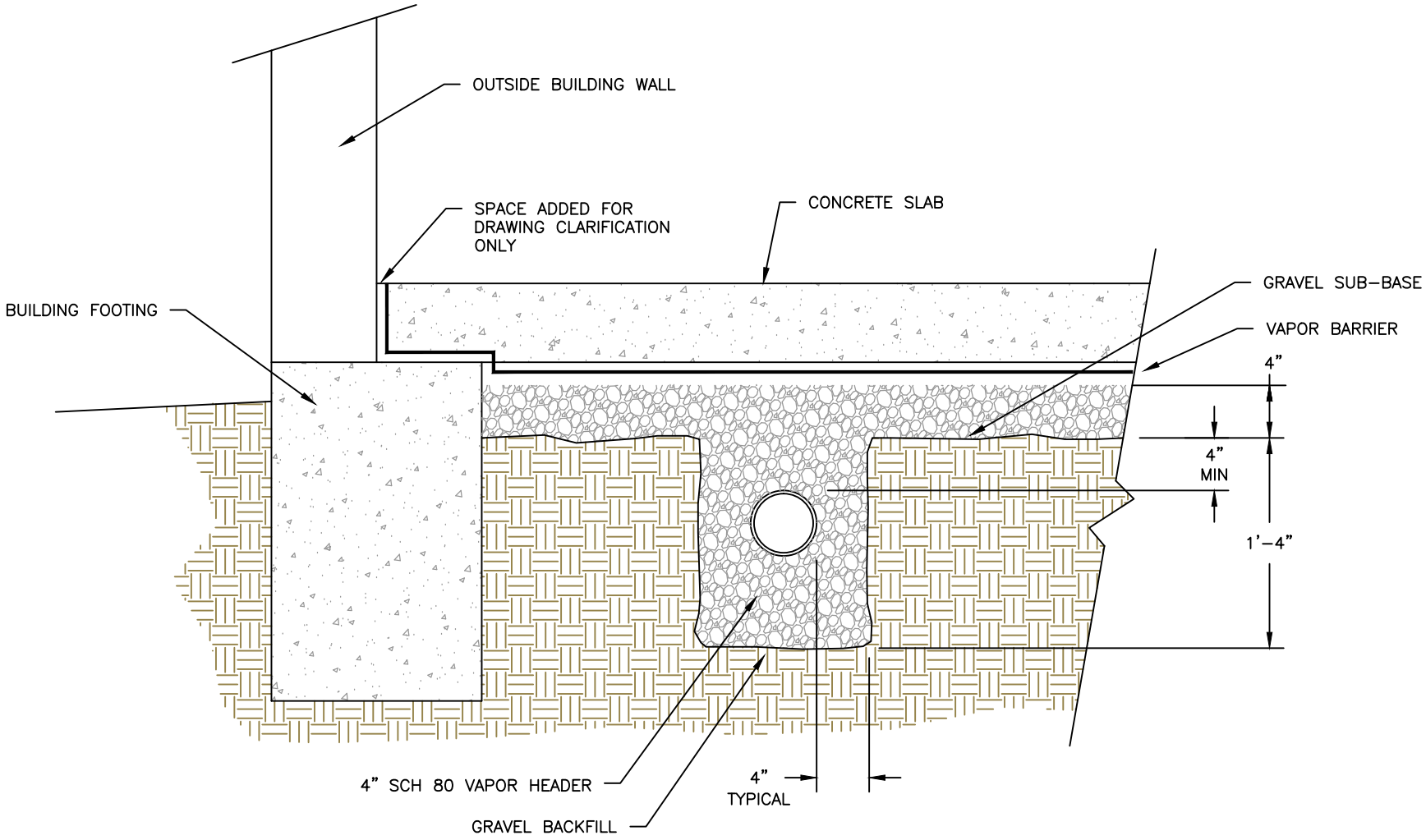

Cross-Section D-D'
Typical Vacuum Header Line

Scale: 1" = 1'-0"

psi Information To Build On
Engineering • Consulting • Testing

Environmental Services
5021 West W.T. Harris Blvd.
Charlotte, NC 28269
(704) 598-2234 Fax (704) 598-2236

Proposed Sub-Slab Mitigation System - System Details

Concord City Hall
Cabarrus Avenue West & Market Street SW
Concord, North Carolina 28025

Checked:	Scale:	Date:	Figure:
B. Lucas	See Dwg.	May 22, 2014	4

Drawn: C. Moran
0511105-1a prelim lat det.dwg

Project Number: 0457510-2

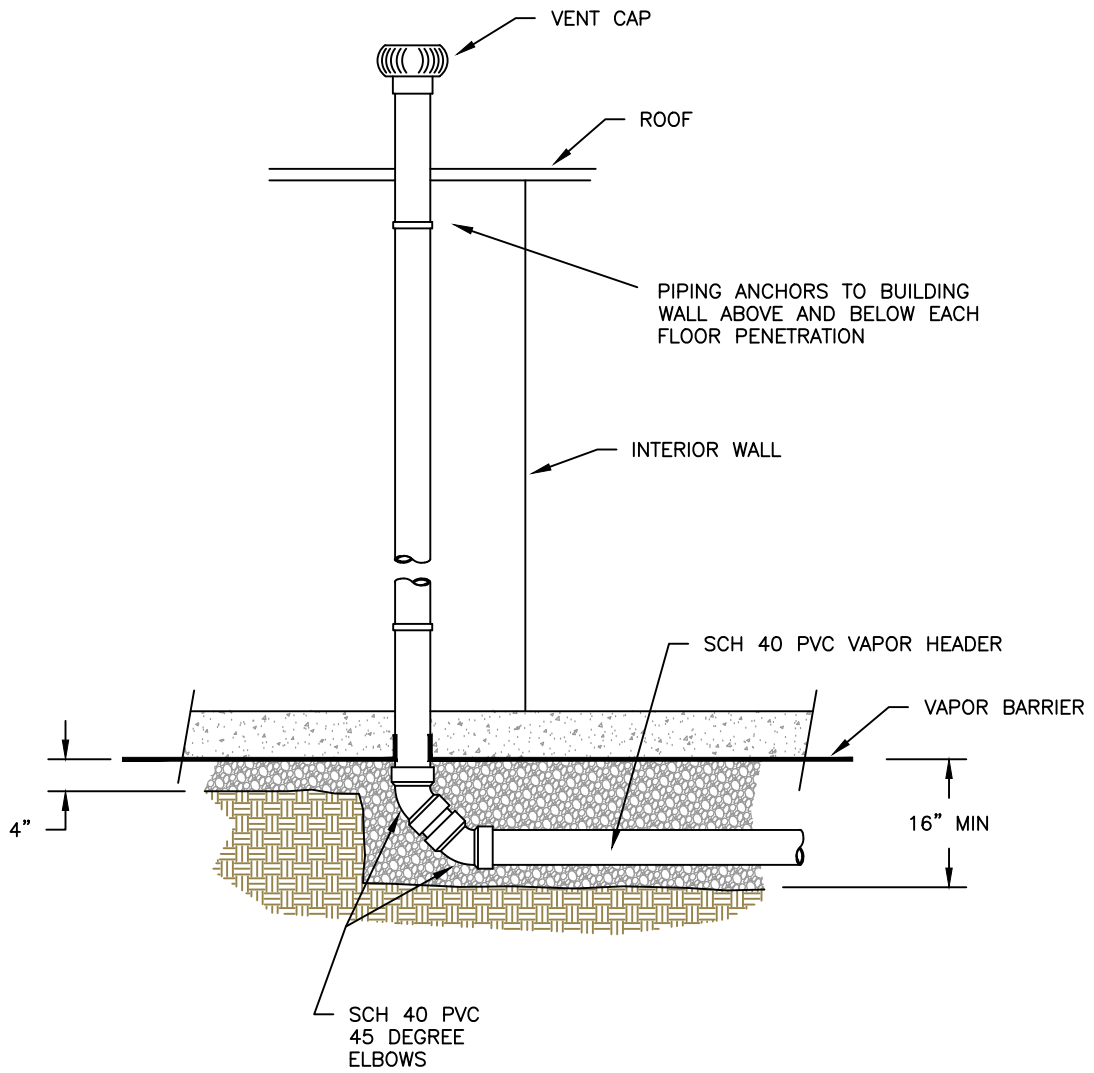

Cross-Section E-E'
Typical Vacuum Header with Vent Riser

Scale: 1/2" = 1'-0"

psi Information To Build On Engineering • Consulting • Testing	Environmental Services 5021 West W.T. Harris Blvd. Charlotte, NC 28269 (704) 598-2234 Fax (704) 598-2236	Proposed Sub-Slab Mitigation System - System Details Concord City Hall Cabarrus Avenue West & Market Street SW Concord, North Carolina 28025	Checked: B. Lucas	Scale: See Dwg.	Date: May 22, 2014	Figure: 5
			Drawn: C. Moran 0511105-1a prelim lat det.dwg	Project Number: 0457510-2		

PART 1 - GENERAL

1.1 DESCRIPTION

A. This section contains requirements for the installation of a sub-slab vapor mitigation system.

B. The purpose of the sub-slab vapor mitigation system is to prevent potential intrusion of petroleum and chlorinated vapors from impacted soil and groundwater into the building.

1.2 DEFINITIONS

A. CAULKS AND SEALANTS - those materials which will significantly reduce the flow of gases through small openings in the building shell.

B. CONDITIONED SPACE - all spaces which are provided with heated and/or cooled air or which are maintained at temperatures over 50 deg. F during the heating season, including adjacent connected spaces separated by an un-insulated component (e.g. basements, utility rooms, garages, corridors).

C. CONTRACTOR - a building trades professional licensed by the state.

D. DEPRESSURIZATION - a condition that exists when the measured air pressure is lower than the reference air pressure.

E. ELASTOMERIC - that property of macromolecular material of returning rapidly to approximately the initial dimensions and shape, after substantial deformation by a weak stress and release of stress.

F. Mil - 1mil=1/1000 of a meter

G. MITIGATION - The act of making less severe, reducing or relieving.

H. OUTSIDE AIR - air taken from the outdoors and, therefore, not previously circulated through the system.

I. SOIL DEPRESSURIZATION SYSTEM - a system designed to withdraw air below the slab through means of a vent pipe and fan arrangement or venting turbine.

J. SOIL GAS - gas which is always present underground, in the small spaces between particles of the soil or in crevices in rock. Major natural constituents of soil gas include nitrogen, water vapor, carbon dioxide, and (near the surface) oxygen. Contaminants which may be present in the soil gas include volatile petroleum constituents such as benzene toluene ethylbenzene and xylenes (BTEX) and chlorinated solvents such as 1,2-dichloroethene.

K. VAPOR BARRIER – High density polyethylene (HDPE) flexible sheet material; or other system of materials placed between the soil and/or gravel sub-base and the building for the purpose of reducing the flow of soil gas into the building.

L. VENTILATION - the process of supplying or removing air, by natural or mechanical means, to or from any space. Such air may or may not have been conditioned.

1.3 SCOPE OF WORK

A. Subgrade soil shall be excavated to a minimum depth of 4-inches below the bottom of the ground floor slab and any shallow foundation components and 16-inches in the area of the vapor laterals. It should be noted that if impacted soil is encountered during excavation activities of the vapor mitigation piping, footers, grade beams, and installation of utilities it is to be disposed of off-site at an approved North Carolina Department of Environmental and Natural Resources (NCDENR) approved facility.

B. Install a minimum 4-inch thick granular blanket beneath the entire building slab. The granular blanket may be constructed of coarse sand, pea gravel, or other self-compacting material having an in-place hydraulic conductivity of greater than 1 x 10-3 cm/sec.

C. The base of the excavation shall be sloped in accordance with the grading plan to prevent ponding of water in the subgrade. Therefore, the thickness of the gravel blanket will be a uniform thickness of at least 4-inches.

D. Vapor recovery piping shall be installed horizontally beneath the building slab near **Columns G and M** as indicated on **Figure 1**. However, a recovery pipe shall be installed within each column line if grade beams or other subsurface impediments are present which may prevent vapor flow between recovery pipes. Install horizontal vapor recovery piping within the vapor lateral trenches and granular blanket (**Figures 2 through 5**). The vapor recovery piping shall be constructed of 4-inch diameter Schedule 40 PVC flush threaded well screen. The well screen will be machine slotted with at least a 0.040 inch slot size, and covered with a geotextile sock.

E. The vapor recovery piping shall be connected to a common riser, which shall be run inside the building within a utility corridor. The vapor recovery riser shall terminate in a vent, which shall extend a minimum of 2 feet above the top of the building and shall be capped with a turbine. The vent stack will be installed to meet all of the following requirements:

(1) be ten feet or more from any window, door, or other opening (e.g., operable skylight, or air intake) into conditioned spaces of the structure,

(2) be ten feet or more from any opening into an adjacent building. The total required distance (ten feet) from the point of discharge to openings in the structure shall be measured either directly between the two points or be the sum of measurements made around intervening obstacles. If the point of discharge is at or below any window, door, or other opening into conditioned spaces of the structure the total required distance (ten feet) shall be measured horizontally between the two points.

F. The passive vapor recovery system should be installed to allow easy conversion to an active recovery system, if this ever should become necessary. Conversion of the system to active would require the installation of a vacuum blower or fan on the vent stack.

G. A vapor barrier, consisting of minimum 10 mil, reinforced HDPE plastic sheeting shall be installed immediately above the granular blanket and below the concrete slab. The vapor barrier should extend beneath the entire building slab.

H. All utility penetrations through the vapor barrier shall be sealed to the extent possible. Overlapping joints in the vapor barrier shall be sealed with an approved sealing material approved by the manufacturer.

1.4 DELIVERY, STORAGE AND HANDLING

A. Deliver materials to site in original unbroken packages bearing manufacturers label showing brand, weight, volume, and batch number. Store materials at the site in strict compliance with the manufacturer's printed instructions.

1.5 JOB CONDITIONS

A. Protect all adjacent areas not to receive gas vapor barrier. Where necessary, apply masking to prevent staining of surfaces to remain exposed wherever membrane abuts to other finish surfaces.

B. Perform work only when existing and forecasted weather conditions are within manufacturer's recommendations for material and product used.

C. Ambient temperature for application of the vapor mitigation system shall be in accordance with the manufacturer's printed installation instructions.

D. All plumbing, electrical, mechanical and structural items to be under or passing through the gas vapor barrier shall be positively secured in their proper positions and appropriately protected prior to membrane application.

E. Vapor barrier shall be installed before placement of reinforcing steel. When not possible, all exposed reinforcing steel shall be masked prior to membrane application.

F. Surface preparation shall be in accordance with the manufacturer's printed installation instructions.

PART 2 - PRODUCTS

2.1 PERMEABLE BACKFILL MATERIAL

A. Permeable backfill shall consist of self-compacting import soil having a compacted permeability of no less than 1 x 10-3 cm/sec. Acceptable materials are:

1. 57 stone.
2. Pea gravel.

2.2 VAPOR BARRIER

A. Vapor barrier membrane material shall consist of minimum 10 mil, reinforced high density polyethylene (HDPE) sheeting, and is resistant to petroleum and chlorinated solvent vapors.

B. Acceptable materials are Florprufe™ 120 Vapor Barrier, manufactured by Grace Construction Products or engineer-approved equivalent.

C. Vapor barrier materials must provide excellent environmental stress crack resistance, impact strength and high tensile strength including additives to retard polymer oxidation and UV degradation.

2.3 VAPOR PIPING

A. Horizontal (i.e., slotted) vapor piping shall consist of 4-inch diameter, Schedule 40 flush-threaded PVC, factory-slotted well screen (0.040 inch slot size).

B. Horizontal vapor piping shall be wrapped in geotextile fabric (sock).

C. Vertical (i.e., non-slotted) vapor piping shall be 4-inch diameter, Schedule 40 PVC piping or piping approved by local building and/or fire codes.

2.4 CAULKS, SEALANTS and TAPES

A. All caulks and sealants shall be resistant to petroleum and chlorinated solvent vapors.

B. Acceptable caulks and sealants shall conform with ASTM C920-87 "Standard Specifications for Elastomeric Joint Sealants" and ASTM C962-86 "Standard Guide for Use of Elastomeric Joint Sealants".

C. All sealant materials and methods of application shall be compatible with the location, function and material of the surface or surfaces being sealed.

D. Caulks and sealants shall be applied in accordance with manufacturer’s directions.

E. Tapes used as a sealant shall be resistant to petroleum and chlorinated solvent vapors and shall have a permeability of less than 10-6 cm/sec.

2.5 PRODUCT WARRANTY

A. Upon delivery and acceptance, the materials manufacturer and installer will provide a written one year standard material indicating the material conforms to the specifications and is free of material defects.

B. Manufacturer/installer will provide replacement material and reinstallation labor, at no charge, for products that do not meet the material properties specified, and described herein.

C. The Installer shall warrant the vapor barrier against defective workmanship, materials, design and installation for a period of one year from the date of substantial completion of the work. Upon receipt of notice from the Owner of failure of any part of the system during the warranty period, the affected part of materials shall be replaced promptly with new parts by and at the expense of the Installer.

PART 3 - EXECUTION

3.1 EXCAVATION

A. Contractor shall excavate soil beneath the building slab to a minimum depth of 4-inches below the bottom of the slab. Trenches shall also be excavated to accommodate horizontal vent piping as shown on attached drawings. *Refer to Master Specification for additional details regarding the excavation of soil within the slab area.*

3.2 INSTALLATION OF PERMEABLE BACKFILL

A. Permeable backfill material shall be installed beneath each building slab to a minimum depth of 4-inches below the bottom of the slab. Trenches shall also be excavated to accommodate horizontal vent piping as shown on attached drawings. *Refer to Master Specification for additional details regarding the installation of permeable backfill within the slab area.*

B. The vapor barrier and vapor recovery piping shall be installed within the backfill material as directed in Sections 3.3 and 3.4.

C. The backfill shall be placed in a controlled manner to avoid crushing of the vapor recovery piping.

3.3 INSTALLATION OF VAPOR PIPING

A. The horizontal vent piping shall be installed within the center of the trenches to provide at least 4-inches of permeable backfill layer cover above and below the piping. As depicted on **Figures 2 through 5**.

B. Temporarily cap the ends of the piping during installation to prevent backfill material from entering the vapor recovery piping.

C. Slotted vent piping shall be installed horizontally throughout the foot-print of the building area as shown on provided drawings. However, in the event that grade beams or underground obstructions will present a barrier to the lateral flow of air between horizontal piping sections, spacing shall be decreased to allow at least 1 pipe per column line.

D. The unslotted lateral runs of vapor piping shall have a minimum slope of 1/8 inch per foot in order to drain any condensation back to soil beneath the soil gas retarder. The system shall be designed and installed so that no portion will allow the excess accumulation of condensation.

E. The vent pipe shall be terminated in a location that will minimize human exposure to the exhaust air. Locations shall be above the eave of the roof. To prevent exposure to vented soil vapor, the point of discharge from vent shall meet all of the following requirements:

   1. be ten feet or more from any window, door, or other opening (e.g., operable skylight, or air intake) into conditioned spaces of the structure,
   2. Be ten (10) feet or more from any window, door, or other opening (e.g., operable skylight, or air intake) into conditioned spaces of the structure, and
   3. Be ten (10) feet or more from any opening into an adjacent building. The total required distance (ten feet) from the point of discharge to openings in the structure shall be measured either directly between the two points or be the sum of measurements made around intervening obstacles. If the point of discharge is at or below any window, door, or other opening into conditioned spaces of the structure the total required distance (ten feet) shall be measured horizontally between the two points.

F. All exposed components of the sub-slab vapor mitigation system shall be labeled "Soil Gas System" to prevent accidental damage or misuse. Labels shall be on a yellow band, two inches wide and spaced three feet apart on all components.

G. All vent piping shall be located in compliance with existing and applicable codes, with regards to clearances from mechanical equipment and flues and notching of structural members. No vent shall penetrate a fire wall or party wall.

H. Vent pipe shall be fastened to the structure of the building with hangers, strapping, or other supports that will adequately secure the vent material. Plumbing pipes, ducts, or mechanical equipment shall not be used to support or secure a vent pipe.

I. Supports for the vertical vent pipe shall be installed at least every 6 feet on horizontal runs. Vertical runs shall be secured either above or below the points of penetration through floors, ceilings, and roof, or at least every 8 feet on runs that do not penetrate floors, ceilings, or roof or as local/state or federal codes require.

J. Vent pipe shall be installed in a configuration that ensures that any rain water or condensation within the pipes drains downward into the ground beneath the slab or soil-gas barrier.

K. The vent pipe shall be capped at the terminus with a minimum 4-inch diameter, galvanized venting turbine, which is capable of operating in low-wind conditions. The ventilator shall be a Model PT4A-4" ventilator, manufactured by WSM Company, or equivalent.

L. Vent pipe shall not block access to any areas requiring maintenance or inspection. The vent shall not be installed in front of or interfere with any light, opening, door, window or equipment access area required by code.

M. Cleaning solvents and adhesives used to join plastic pipes and fittings shall be as recommended by manufacturer's for use with the type of pipe material used in the mitigation system. Cleaning solvents and adhesives are to contain no volatile organic compounds (VOCs) or low concentrations of VOCs.

3.4 INSTALLATION OF VAPOR BARRIER

A. The vapor barrier shall be installed to form a continuous sheet across the entire building footprint.

B. All seams of the vapor barrier membrane shall be lapped at least 6 inches or as required by the manufacturer. Seams shall be sealed with an approved sealant and/or tape as required by the manufacturer.

C. Where pipes, columns or other objects penetrate the vapor barrier, it shall be cut and sealed to the pipe, column or penetration.

D. Punctures or tears in the vapor barrier membrane shall be repaired with the same or compatible material.

E. Seal vapor barrier membrane to foundation walls or grade beams at building perimeter using approved manufacturer sealant and procedures.

F. Avoid extended traffic over vapor barrier to prevent punctures or tears in the vapor barrier membrane. Any punctures or tears will be repaired as specified by the manufacturer's guidelines.

3.5 SEALING OF SLAB PENETRATIONS

A. Small cracks and joints with widths less than 1/16 inch (0.0625") shall be repaired by the application of an elastomeric material capable of withstanding at least 25 percent extension and extending at least 4 inches beyond the length and width of the crack.

B. Large cracks and joints with widths larger than 1/16 inch (0.0625") shall be enlarged to a recess with minimum dimensions of ¼ inch by ¼ inch (0.25" x 0.25") and sealed with an approved caulk or sealant applied over a sealant backer in accordance with the manufacturer's recommendations.

C. For utility penetrations, work spaces and large slab openings, such as at a bath tub drain or a toilet flange, an acceptable method for sealing the exposed soil shall include fully covering the exposed soil

with a solvent based plastic roof cement or other approved to a minimum depth of 1 inch. Where voids between masonry foundation walls and the slab edge are accessible, and are sealed in order to reduce vapor entry, non-shrinking cementitious material may be used.

D. Any sump located in a conditioned portion of a building, or in an enclosed space directly attached to a conditioned portion of a building, shall be covered by a lid. An air tight seal shall be formed between the sump and lid and at any wire or pipe penetrations.

- - - E N D - - -

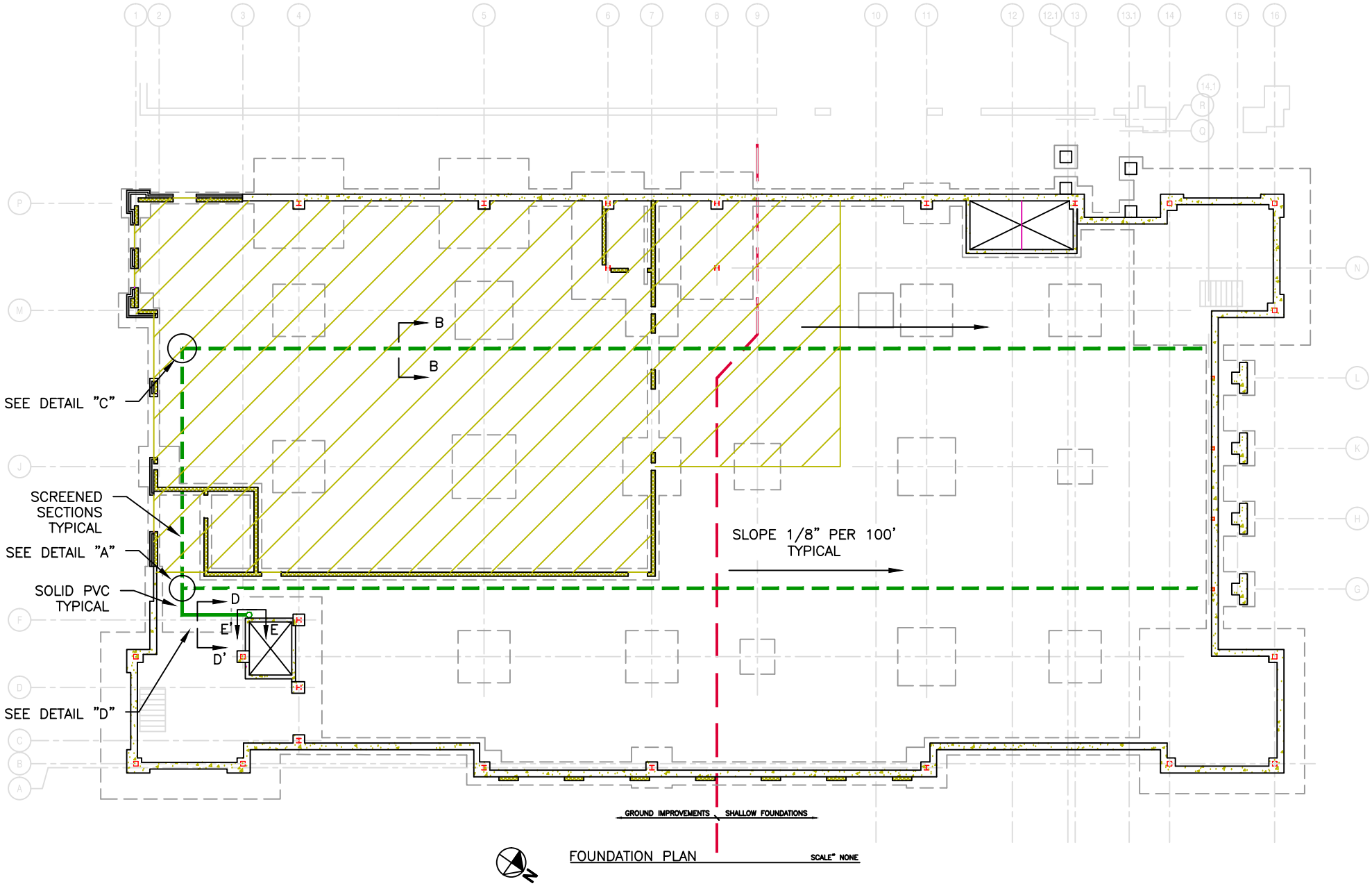

psi Information To Build On Engineering • Consulting • Testing	Environmental Services 5021 West W.T. Harris Blvd. Charlotte, NC 28269 (704) 598-2234 Fax (704) 598-2236	Proposed Sub-Slab Mitigation System Concord City Hall Cabarrus Avenue West & Market Street SW Concord, North Carolina 28025	Checked: B. Lucas	Scale: See Dwg.	Date: May 22, 2014	Figure: 1
			Drawn: C. Moran 0511105-1a prelim lat det.dwg	Project Number: 0457510-2		

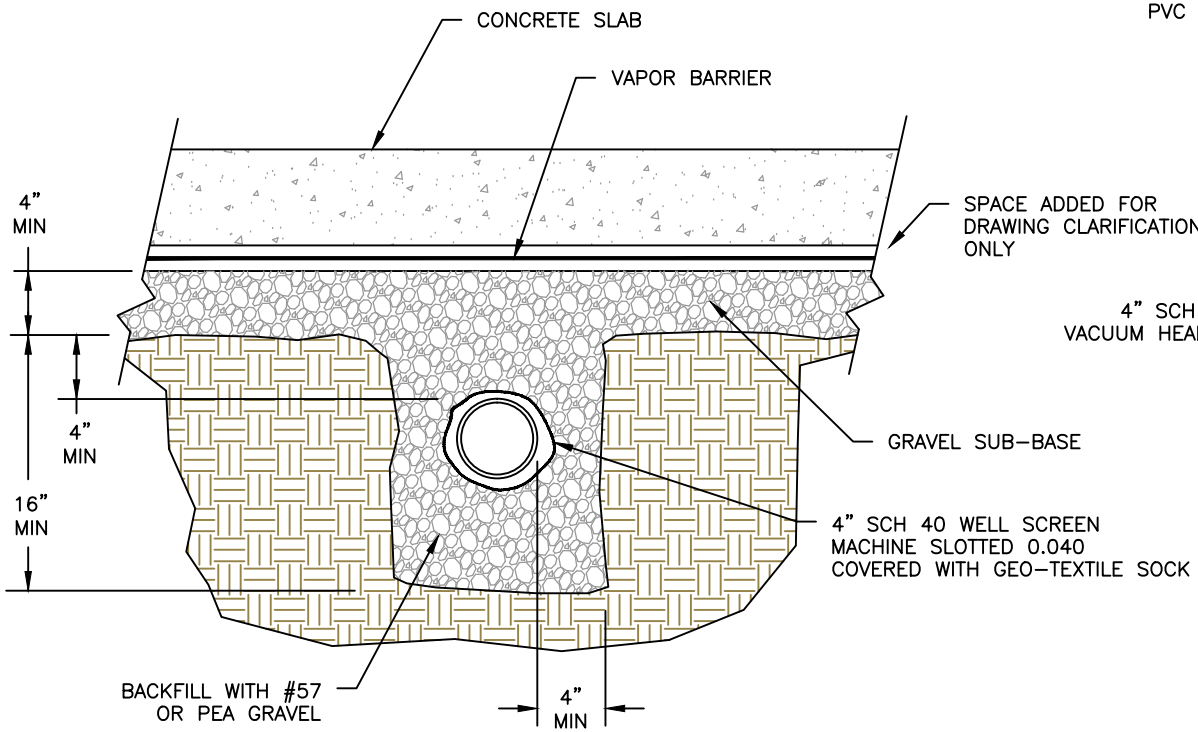

Cross-Section B-B'
Typical Vapor Line below Slab

Scale: 1" = 1'-0"

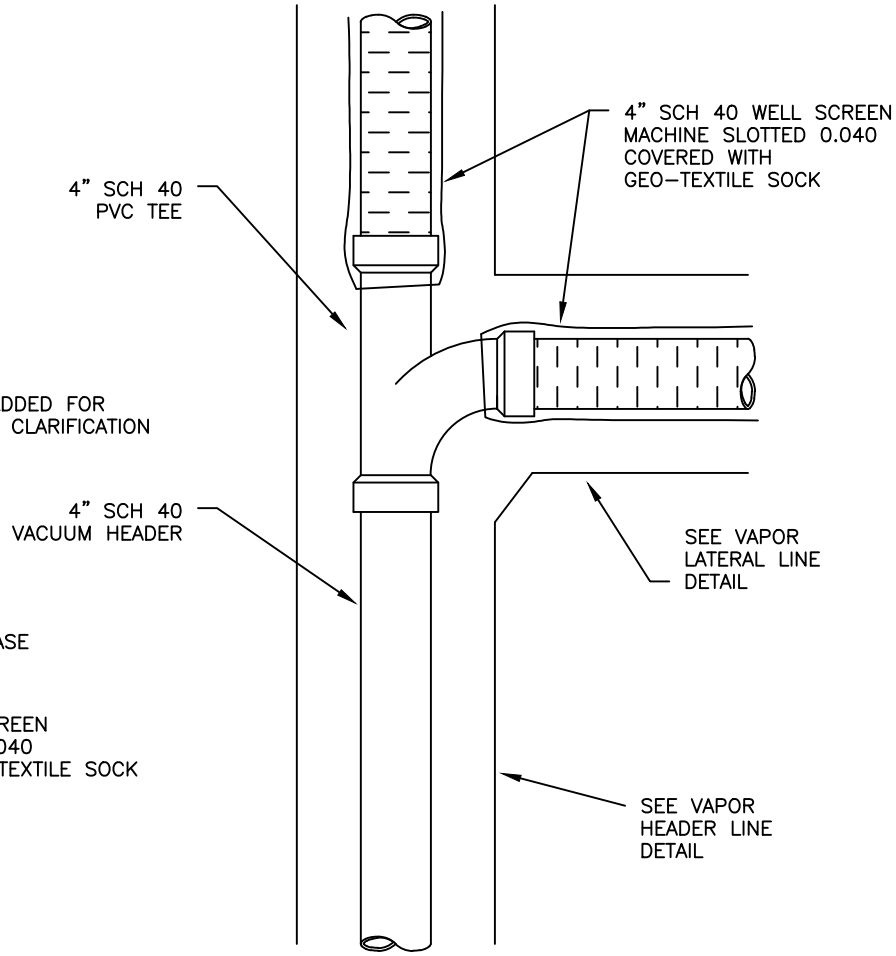

Detail "A" Vacuum Header Tee

Scale: 1" = 1'-0"

psi Information To Build On Engineering • Consulting • Testing	Environmental Services 5021 West W.T. Harris Blvd. Charlotte, NC 28269 (704) 598-2234 Fax (704) 598-2236	Proposed Sub-Slab Mitigation System - System Details Concord City Hall Cabarrus Avenue West & Market Street SW Concord, North Carolina 28025	Checked: B. Lucas	Scale: See Dwg.	Date: May 22, 2014	Figure: 2
			Drawn: C. Moran 0511105-1a prelim lat det.dwg	Project Number: 0457510-2		

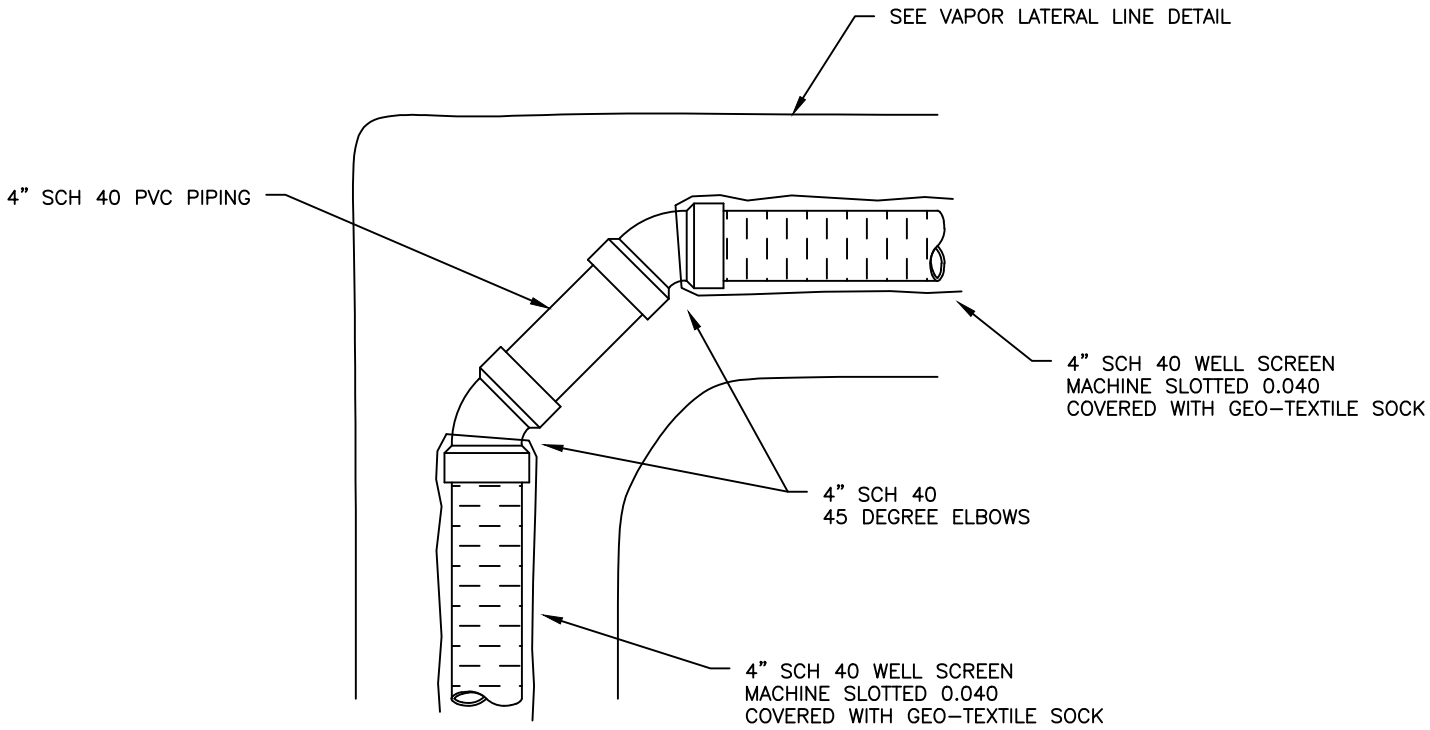

Detail "C"
Vapor Header Corner

Scale: 1" = 1'-0"

psi Information To Build On Engineering • Consulting • Testing	Environmental Services 5021 West W.T. Harris Blvd. Charlotte, NC 28269 (704) 598-2234 Fax (704) 598-2236	Proposed Sub-Slab Mitigation System - System Details Concord City Hall Cabarrus Avenue West & Market Street SW Concord, North Carolina 28025	Checked: B. Lucas	Scale: See Dwg.	Date: May 22, 2014	Figure: 3
			Drawn: C. Moran 0511105-1a prelim lat det.dwg	Project Number: 0457510-2		

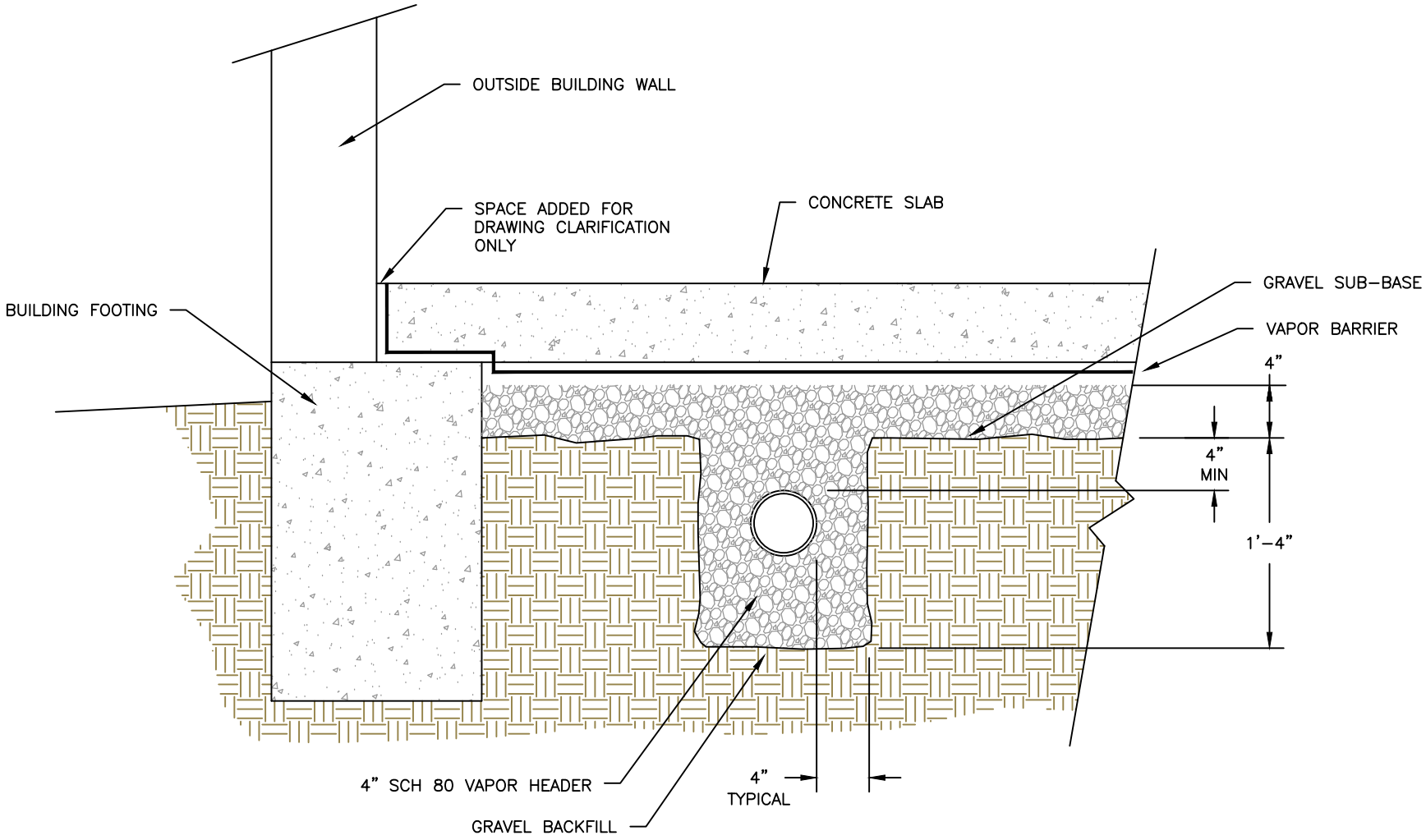

Cross-Section D-D'
Typical Vacuum Header Line

Scale: 1" = 1'-0"

psi Information To Build On
Engineering • Consulting • Testing

Environmental Services
5021 West W.T. Harris Blvd.
Charlotte, NC 28269
(704) 598-2234 Fax (704) 598-2236

Proposed Sub-Slab Mitigation System - System Details

Concord City Hall
Cabarrus Avenue West & Market Street SW
Concord, North Carolina 28025

Checked:	Scale:	Date:	Figure:
B. Lucas	See Dwg.	May 22, 2014	4

Drawn: C. Moran
0511105-1a prelim lat det.dwg

Project Number: 0457510-2

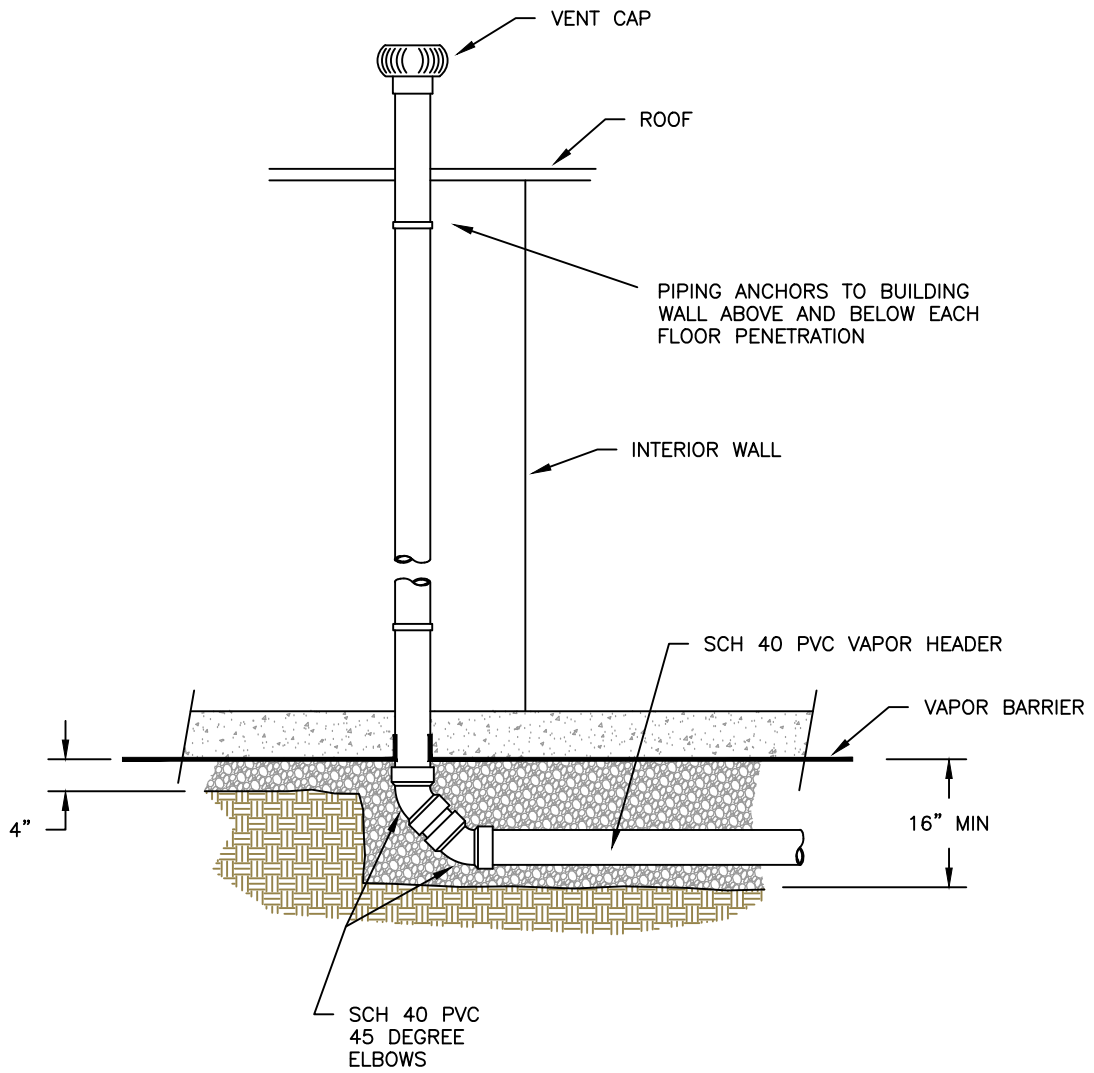

Cross-Section E-E'
Typical Vacuum Header with Vent Riser

Scale: 1/2" = 1'-0"

psi Information To Build On Engineering • Consulting • Testing	Environmental Services 5021 West W.T. Harris Blvd. Charlotte, NC 28269 (704) 598-2234 Fax (704) 598-2236	Proposed Sub-Slab Mitigation System - System Details Concord City Hall Cabarrus Avenue West & Market Street SW Concord, North Carolina 28025	Checked: B. Lucas	Scale: See Dwg.	Date: May 22, 2014	Figure: 5
			Drawn: C. Moran 0511105-1a prelim lat det.dwg	Project Number: 0457510-2		

Division 03 – Concrete

SECTION 03 15 00 - HYDROPHILIC WATERSTOP

PART 1 — GENERAL

1.01 RELATED DOCUMENTS

A. All of the Contract Documents, including General and Supplementary Conditions and Division 1 General Requirements, apply to the work of this section.

1.02 SUMMARY

A. Section provides for an expanding hydrophilic waterstop as specified herein, illustrated on project drawings, or as required to complete the work to comply with waterproofing warranty requirements in Section 07 14 16 Fluid-Applied Waterproofing.

B. System Description:

1. Waterstop Strip: A non-Bentonite hydrophilic waterstop with a minimum swell as per Section 2.02

2. Accessories for complete waterstop application

C. Related Sections: Other specification sections which directly relate to the work of this section include, but are not limited to, the following

1. Section 03 30 00 – Cast-In-Place Concrete

2. Section 07 27 26 – Fluid-Applied Membrane Air Barriers

3. Section 07 14 16 – Fluid-Applied Waterproofing

1.03 SUBMITTALS

A. Product Data: Submit manufacturer’s product data, installation instructions, use limitations and recommendations.

B. Shop drawings showing locations and extent of waterstop.

C. Written documentation demonstrating Installers qualifications under the "Quality Assurance" article including reference projects of a similar scope.

D. Samples: Submit representative sample of actual product.

E. Warranty: Submit a sample warranty identifying the terms and conditions stated in Section 1.7.

1.04 QUALITY ASSURANCE

A. Manufacturer: Waterstop systems shall be manufactured and marketed by a firm with a minimum of 20 years’ experience in the production and sales of building materials. Manufacturers proposed for use, but not named in these specifications shall submit evidence of ability to meet all requirements specified, and include a list of projects of similar design and complexity completed within the past five years.

B. Installer Qualifications: A firm which has at least three (3) years experience in work for the type required by this section.

C. Material: Waterstop shall be by single source manufacturer and shall be specially engineered to be a swellable and conformable polyurethane/butyl blended rubber free of sodium bentonite that expands when in contact with water.

D. Pre-Installation Conference: A pre-installation conference shall be held prior to commencement of field operations to establish procedures to maintain optimum working conditions and to coordinate this work with related and adjacent work. Agenda for meeting shall include review of surface preparation, installation procedures, special details, inspection, protection, and repair procedures.

E. Expansion Joints: Waterstop is not designed for moving joints.

F. Concrete: Concrete shall be normal weight structural concrete and provide a minimum cover of 3” around the Waterstop.

1.05 DELIVERY, STORAGE AND HANDLING

A. Deliver materials and products in the original, unopened containers with seals unbroken, labeled with the manufacturer's name, product brand name and type, date of manufacture and directions for storage and use.

B. Store and handle materials in strict compliance with manufacturer’s instructions, recommendations and material safety data sheets. Protect from damage from sunlight, weather, excessive temperatures and construction operations. Remove damaged material from the site and dispose of in accordance with applicable regulations.

1. Store material off of ground and keep dry.
2. Provide cover for material to protect top and sides.

C. Sequence deliveries to avoid delays, but minimize on-site storage.

1.06 PROJECT CONDITIONS

A. Perform work only when existing and forecasted weather conditions are within the limits established by the manufacturer of the materials and products used.

B. Proceed with installation only when substrate construction and preparation work is complete and in condition to receive waterstop.

C. Do not allow waste products (i.e. petroleum, grease, oil, solvents, vegetable or mineral oil, animal fat, acids, etc.) to come into contact with the waterstop. Any exposure to foreign materials or chemical discharges must be presented to the Membrane Manufacturer to determine the impact on the waterstop performance.

D. Maintain environmental conditions within limits recommended by manufacturer for optimum results. Do not install products under environmental conditions outside manufacturer's absolute limits.

E. General contractor shall assure adequate protection during and after the application of the waterstop.

1.07 WARRANTY

A. Upon completion of work, provide a copy of Manufacturer’s standard warranty.

PART 2 — PRODUCTS

2.01 GENERAL

A. Basis-of Design “Adcore ES” manufactured and supplied by:

1. Grace Construction Products

62 Whittemore Avenue, Cambridge, MA. 02140

tel 617-876-1400

B. Other approved manufacturers:

1. Greenstreak Group, Inc. “Hydrotite”
2. Daeryong Co., Ltd “Hyper Seal DP”

2.02 MATERIALS

A. Hydrophilic Waterstop Strip: a swellable, conformable polyurethane/butyl blended rubber based material free of sodium bentonite.

B. Waterstop Physical Properties:

PHYSICAL PROPERTIES FOR HYDROPHYLIC WATERSTOP:

Property	**Typical Value**
Color	Grey
Size	1.0 in. x ½ in. x 16 ft. (25.4 mm x 12.7 mm x 4.9 m) rolls
Packaging	6 rolls per case
Hydrostatic Head Resistance	70 m (231 ft)
Wet - Dry Cycling [25 Cycles @ 231 ft. (70 m)]	No Effect
Adhesion to Concrete using Waterstop Adhesive	Excellent

PART 3 — EXECUTION

3.01 EXAMINATION

A. Do not begin installation until substrates have been properly prepared.

B. Examine conditions of substrates and other conditions under which this work is to be performed and notify the Architect, in writing, of circumstances detrimental to the proper completion of the work. Do not proceed with work until unsatisfactory conditions are corrected.

3.02 PREPARATION OF SUBSTRATES

A. Clean surfaces thoroughly prior to installation.

B. Prepare surfaces using the methods recommended by the manufacturer for achieving the best result for the substrate under the project conditions.

C. Do not install waterstop onto any substrates with standing water.

3.03 INSTALLATION

A. Refer to manufacturer’s literature for recommendations on installation, including but not limited to, the following:

1. Construction Joint:

b) On irregular concrete faces, apply a ½ in. (12 mm) bead of Waterstop Adhesive as bedding for Waterstop.

c) Secure Waterstop using masonry nails 1½ in. - 2 in. (40 mm – 50 mm) long with a washer ¾ in. (20 mm) in diameter. Hilti EM6-20-12 FP8 shot fired fixings with ¼ in. (6 mm) nuts and ¾ in. (20 mm) diameter washers may also be used. Fixings should be spaced at a maximum of 12 in. (300 mm) centers with a minimum spacing that ensures proper contact to substrate.

d) Waterstop joints should overlap a minimum of 4 in. (100 mm), ensuring full contact between jointed pieces.

e) Waterstop can be bent around corners; however on complex geometry use Waterstop Adhesive to fill any gaps.

f) Any damaged sections should be removed and repaired with a new section of Waterstop.

g) Keep Waterstop dry prior to pouring concrete.

2. Pipe Penetration:

a) Waterstop Adhesive must be applied to dry substrates only. Apply by brush to the substrate. Wait until surfacei s dry to touch, and then press Waterstop firmly into place.

b) Waterstop joints should overlap a minimum of 4 in. (100 mm), ensuring full contact between jointed pieces.

c) Keep Waterstop dry prior to pouring concrete.

3.04 CLEANING AND PROTECTION

A. Protect membrane in accordance with manufacturer's recommendations until placement of concrete.

B. Inspect for damage just prior to placement of concrete and make repairs in accordance with manufacturer's recommendations.

END OF SECTION 03 15 00

SECTION 03 30 00 - CAST-IN-PLACE CONCRETE

PART 1 - GENERAL

1.1 SUMMARY

A. This Section includes cast-in-place concrete, including reinforcement, concrete materials, mix design, placement procedures, and finishes.

1.2 SUBMITTALS

A. Product Data: For each manufactured material and product indicated.

B. Design Mixes: For each concrete mix indicated.

C. Shop Drawings: Include details of steel reinforcement placement including material, grade, bar schedules, stirrup spacing, bent bar diagrams, arrangement, and supports.

D. Material certificates.

1.3 QUALITY ASSURANCE

A. Manufacturer Qualifications: A firm experienced in manufacturing ready-mixed concrete products complying with ASTM C 94 requirements for production facilities and equipment.

B. Comply with ACI 301, "Specification for Structural Concrete," including the following, unless modified by the requirements of the Contract Documents:
   1. General requirements, including submittals, quality assurance, acceptance of structure, and protection of in-place concrete.
   2. Formwork and form accessories.
   3. Steel reinforcement and supports.
   4. Concrete mixtures.
   5. Handling, placing, and constructing concrete.

C. Once all submittals have been submitted, reviewed and approved, the contractor shall schedule a pre-installation meeting on-site with the subcontractor, Architect, Engineer and Special Inspector in attendance.

PART 2 - PRODUCTS

2.1 MATERIALS

A. Formwork: Furnish formwork and form accessories according to ACI 301.

B. Steel Reinforcement:
   1. Reinforcing Bars: ASTM A 615/A 615M, Grade 60, deformed.
   2. Plain-Steel Wire: ASTM A 82, as drawn.

3. Plain-Steel Welded Wire Fabric: ASTM A 185, fabricated from as-drawn steel wire into flat sheets.
4. Deformed-Steel Welded Wire Fabric: ASTM A 497, flat sheet.

C. Concrete Materials:
1. Portland Cement: ASTM C 150, Type I.
2. Normal-Weight Aggregate: ASTM C 33, uniformly graded, not exceeding 1-1/2-inch nominal size.
3. Lightweight Aggregate: ASTM C 330.
4. Water: Complying with ASTM C 94.

D. Admixtures:
1. Air-Entraining Admixture: ASTM C 260.
2. Water-Reducing Admixture: ASTM C 494, Type A.
3. High-Range, Water-Reducing Admixture: ASTM C 494, Type F.
4. Water-Reducing and Accelerating Admixture: ASTM C 494, Type E.
5. Water-Reducing and Retarding Admixture: ASTM C 494, Type D.
6. Color Conditioning Concrete Admixture: L.M. Scolfield Chromex or approved equal. Color as indicated on the Drawings or if not indicated, the Architect shall select from a full selection of available colors.

F. Underslab Vapor Barrier
a. See section 02 80 00 for requirements.

G. Waterstops:

1. Provide rigid waterstops made of rubber, PVC, copper, or stainless steel. Water stop shall be minimum 6” high and have bulbs on each end. Install as per manufacturers recommendations.

H. Joint-Filler Strips: ASTM D 1751, asphalt-saturated cellulosic fiber.

I. Curing Materials:
7. Evaporation Retarder: Waterborne, monomolecular film forming, manufactured for application to fresh concrete.
8. Absorptive Cover: AASHTO M 182, Class 2, burlap cloth made from jute or kenaf.
9. Moisture-Retaining Cover: ASTM C 171, polyethylene film or white burlap-polyethylene sheet.
10. Water: Potable.
11. Clear, Waterborne, Membrane-Forming Curing and Sealing Compound: ASTM C 1315, Type 1, Class A.

J. Granular Fill: Clean mixture of crushed stone or crushed or uncrushed gravel; ASTM D448, size 57, with 100% passing a 1 ½ inch sieve and 0 to 5% passing a No. 8 sieve.

K. Sealing Materials
1. Sealer and Dustproofer: A heavy duty, water base acrylic emulsion sealer containing a minimum of 20 percent solids and that is v.o.c. compliant.
2. Colored Floor Sealer System (where scheduled): Install ArmorPoxy super epoxy enamel floor sealer system with high gloss finish and minimum 2 mil. dry thickness per coat - per manufacturers recommendations. Approved substitutes will be accepted in accordance with Division 01 specifications. Submit manufacturer’s full range of colors for Architect’s selection.

2.2 CONCRETE MIXES

A. Comply with ACI 301 requirements for concrete mixtures.

B. Prepare design mixes, proportioned according to ACI 301, for normal-weight concrete determined by either laboratory trial mix or field test data bases, as follows:
   1. Compressive Strength (28 Days): As indicated on structural drawings.
   2. Slump: As indicated on structural drawings.

C. Add air-entraining admixture at manufacturer's prescribed rate to result in concrete at point of placement having an air content of 6.0 percent within a tolerance of plus 1.0 or minus 1.5 percent at exposed formed concrete.
   1. Air content of trowel-finished interior concrete floors shall not exceed 2.0 percent.

2.3 CONCRETE MIXING

A. Ready-Mixed Concrete: Comply with ASTM C 94.
   1. When air temperature is between 85 and 90 deg F, reduce mixing and delivery time from 1-1/2 hours to 75 minutes; when air temperature is above 90 deg F, reduce mixing and delivery time to 60 minutes.

B. Provide batch ticket for each batch discharged and used in the Work, indicating Project identification name and number, date, mix type, mix time, quantity, and amount of water added. Record approximate location of final deposit in structure.

PART 3 - EXECUTION

3.1 INSTALLATION, GENERAL

A. Formwork: Design, construct, erect, shore, brace, and maintain formwork according to ACI 301.

B. Vapor Retarder: See section 02 80 00.

C. Steel Reinforcement: Comply with CRSI's "Manual of Standard Practice" for fabricating, placing, and supporting reinforcement.
   1. Do not cut or puncture vapor retarder. Repair damage and reseal vapor retarder before placing concrete.

D. Joints: Construct joints true to line with faces perpendicular to surface plane of concrete.
   1. Construction Joints: Locate and install so as not to impair strength or appearance of concrete, at locations indicated or as approved by Architect.
   2. Isolation Joints: Install joint-filler strips at junctions of slabs-on-grade and vertical surfaces, such as column pedestals, foundation walls, grade beams, and other locations, as indicated.
      a. Extend joint fillers full width and depth of joint, terminating flush with finished concrete surface, unless otherwise indicated.
   3. Contraction Joints in Slabs-on-Grade: Form weakened-plane contraction joints, sectioning concrete into areas as indicated. Construct contraction joints for a depth equal to at least one-fourth of the concrete thickness, as follows:
      a. Sawed Joints: Form contraction joints with power saws equipped with shatterproof abrasive or diamond-rimmed blades. Cut 1/8-inch- wide joints into

concrete when cutting action will not tear, abrade, or otherwise damage surface and before concrete develops random contraction cracks.

E. Tolerances: Comply with ACI 117, "Specifications for Tolerances for Concrete Construction and Materials."

3.2 CONCRETE PLACEMENT

A. Comply with recommendations in ACI 304R for measuring, mixing, transporting, and placing concrete.

B. Do not add water to concrete during delivery, at Project site, or during placement.

C. Consolidate concrete with mechanical vibrating equipment.

D. Protect concrete from physical damage or reduced strength due to weather extremes during mixing, placing, and curing.
   1. In cold weather comply with ACI 306.
   2. In hot weather comply with ACI 305.

3.3 FINISHING FORMED SURFACES

A. Rough-Formed Finish: As-cast concrete texture imparted by form-facing material with tie holes and defective areas repaired and patched, and fins and other projections exceeding 1/4 inch in height rubbed down or chipped off.
   1. Apply to concrete surfaces not exposed to public view.

B. Smooth-Formed Finish: As-cast concrete texture imparted by form-facing material, arranged in an orderly and symmetrical manner with a minimum of seams. Repair and patch tie holes and defective areas. Completely remove fins and other projections.
   1. Apply to concrete surfaces exposed to public view or to be covered with a coating or covering material applied directly to concrete, such as waterproofing, dampproofing, veneer plaster, or painting.
   2. Do not apply rubbed finish to smooth-formed finish.
   3. Apply smooth-rubbed finish, defined in ACI 301, to smooth-formed finished concrete.

C. Related Unformed Surfaces: At tops of walls, horizontal offsets, and similar unformed surfaces adjacent to formed surfaces, strike off smooth and finish with a texture matching adjacent formed surfaces. Continue final surface treatment of formed surfaces uniformly across adjacent unformed surfaces, unless otherwise indicated.

3.4 FINISHING UNFORMED SURFACES.

A. General: Comply with ACI 302.1R for screeding, restraightening, and finishing operations for concrete surfaces. Do not wet concrete surfaces.

B. Screed surfaces with a straightedge and strike off. Begin initial floating using bull floats or darbies to form a uniform and open-textured surface plane before excess moisture or bleedwater appears on the surface.
   1. Do not further disturb surfaces before starting finishing operations.

C. Scratch Finish: Apply scratch finish to surfaces to receive concrete floor topping or mortar setting beds for ceramic or quarry tile, portland cement terrazzo, and other bonded cementitious floor finish, unless otherwise indicated.

D. Float Finish: Apply float finish to surfaces indicated, to surfaces to receive trowel finish, and to floor and slab surfaces to be covered with fluid-applied or sheet waterproofing, built-up or membrane roofing, or sand-bed terrazzo.

E. Trowel Finish: Apply a hard trowel finish to surfaces indicated and to floor and slab surfaces exposed to view or to be covered with resilient flooring, carpet, ceramic or quarry tile set over a cleavage membrane, paint, or another thin film-finish coating system.

F. Trowel and Fine-Broom Finish: Apply a partial trowel finish, stopping after second troweling, to surfaces indicated and to surfaces where ceramic or quarry tile is to be installed by either thickset or thin-set methods. Immediately after second troweling, and when concrete is still plastic, slightly scarify surface with a fine broom.

G. Nonslip Broom Finish: Apply a nonslip broom finish to surfaces indicated and to exterior concrete platforms, steps, and ramps. Immediately after float finishing, slightly roughen trafficked surface by brooming with fiber-bristle broom perpendicular to main traffic route.

3.5 CONCRETE PROTECTION AND CURING

A. General: Protect freshly placed concrete from premature drying and excessive cold or hot temperatures. Comply with ACI 306.1 for cold-weather protection, and follow recommendations in ACI 305R for hot-weather protection during curing.

B. Evaporation Retarder: Apply evaporation retarder to concrete surfaces if hot, dry, or windy conditions occur before and during finishing operations. Apply according to manufacturer's written instructions after placing, screeding, and bull floating or darbying concrete, but before float finishing.

C. Begin curing after finishing concrete, but not before free water has disappeared from concrete surface.

D. Cure formed and unformed concrete for at least seven days as follows:
   1. Moisture Curing: Keep surfaces continuously moist with absorptive cover, water saturated and kept continuously wet.
   2. Moisture-Retaining-Cover Curing: Cover concrete surfaces with moisture-retaining cover for curing concrete, placed in widest practicable width, with sides and ends lapped at least 12 inches, and sealed by waterproof tape or adhesive. Immediately repair any holes or tears during curing period using cover material and waterproof tape.
   3. Curing Compound: Apply uniformly in continuous operation by power spray or roller according to manufacturer's written instructions. Recoat areas subjected to heavy rainfall within three hours after initial application. Maintain continuity of coating and repair damage during curing period.

3.6 LIQUID FLOOR TREATMENTS

A. Sealing and Dustpoofing Coats: Provide two coats of sealer over all interior floor slabs to be left exposed to view per manufacturer’s recommendations. Apply the first coat after minimum curing time recommended by the manufacturer, but no later than three weeks after that curing time ends.

Apply the second coat after all painting has been completed and the floors cleaned as outlined below.

1. Remove curing compounds, sealers, oil, dirt, laitance, and other contaminants and complete surface repairs.
2. Do not apply to concrete that is less than 7 days old.
3. Apply liquid cleaner until surface is saturated, scrubbing into surface until a gel forms; rewet; and repeat brooming or scrubbing. Rinse with water and remove excess material until surface is dry. Repeat application if surface is rough or porous.

3.7 FIELD QUALITY CONTROL

A. Testing Agency: Owner will engage a qualified independent testing and inspecting agency to sample materials, perform tests, and submit test reports during concrete placement. Tests will be performed according to ACI 301.
   1. Testing Frequency: At least one composite sample for each 100 cu. yd. or fraction thereof of each concrete mix placed each day.

END OF SECTION 03 30 00

Division 04 - Masonry

SECTION 04 20 00 - UNIT MASONRY

PART 1 - GENERAL

1.1 RELATED DOCUMENTS

A. Drawings and general provisions of the Contract, including General and Supplementary Conditions and Division 01 Specification Sections, apply to this Section.

1.2 SUMMARY

A. This Section includes unit masonry assemblies consisting of the following:
   1. Concrete masonry units.
   2. Face brick.
   3. Building (common) brick.
   4. Mortar and grout.
   5. Reinforcing steel.
   6. Masonry joint reinforcement.
   7. Ties and anchors.
   8. Embedded flashing.
   9. Miscellaneous masonry accessories.
   10. Cavity-wall insulation.

B. Related Sections include the following:
   1. Division 07 Section "Fluid-Applied Membrane Air Barriers" for air and water barriers applied to cavity face of backup wythes of cavity walls.
   2. Division 07 Section "Sheet Metal Flashing and Trim" for exposed sheet metal flashing.

C. Products installed, but not furnished, under this Section include the following:
   1. Steel lintels and shelf angles for unit masonry, furnished under Division 05.
   2. Manufactured reglets in masonry joints for metal flashing, furnished under Division 07.
   3. Hollow-metal frames in unit masonry openings, furnished under Division 08.

1.3 DEFINITIONS

A. Reinforced Masonry: Masonry containing reinforcing steel in grouted cells.

1.4 PERFORMANCE REQUIREMENTS

A. Product Data: For each different masonry unit, accessory, and other manufactured product specified.

B. Shop Drawings: Show fabrication and installation details for the following:
   1. Reinforcing Steel: Detail bending and placement of unit masonry reinforcing bars. Comply with ACI 315, "Details and Detailing of Concrete Reinforcement." Show elevations of reinforced walls.
   2. Fabricated Flashing: Detail corner units, end-dam units, and other special applications.

C. Samples for Initial Selection: For the following:
   1. Unit masonry Samples in small-scale form showing the full range of colors and textures available for each different exposed masonry unit required.

2. Colored mortar Samples showing the full range of colors available.

D. Samples for Verification: For the following:
1. Full-size units for each different exposed masonry unit required, showing the full range of exposed colors, textures, and dimensions to be expected in the completed construction.
2. Colored mortar Samples for each color required, showing the full range of colors expected in the finished construction. Make samples using the same sand and mortar ingredients to be used on Project.
3. Accessories embedded in the masonry.

E. Qualification Data: For firms and persons specified in "Quality Assurance" Article.

F. Material Test Reports: From a qualified testing agency indicating and interpreting test results of the following for compliance with requirements indicated:
1. Each type of masonry unit required.
   a. Include size-variation data for brick, verifying that actual range of sizes falls within specified tolerances.
   b. Include test results, measurements, and calculations establishing net-area compressive strength of masonry units.
2. Mortar complying with ASTM C 270
3. Grout mixes complying with compressive strength requirements of ASTM C 476. Include description of type and proportions of grout ingredients.

G. Material Certificates: Signed by manufacturers certifying that each of the following items complies with requirements:
1. Each cement product required for mortar and grout, including name of manufacturer, brand, type, and weight slips at time of delivery.
2. Each material and grade indicated for reinforcing bars.
3. Each type and size of joint reinforcement.
4. Each type and size of anchor, tie, and metal accessory.

H. Job Site Testing: The general contractor shall test three masonry units from two random loads of masonry block with an independent testing facility for compliance of the aggregate materials and mix.

1.5 QUALITY ASSURANCE

A. Source Limitations for Masonry Units: Obtain exposed masonry units of a uniform texture and color, or a uniform blend within the ranges accepted for these characteristics, through one source from a single manufacturer for each product required.

B. Source Limitations for Mortar Materials: Obtain mortar ingredients of a uniform quality, including color for exposed masonry, from one manufacturer for each cementitious component and from one source or producer for each aggregate.

C. Fire-Resistance Ratings: Where indicated, provide materials and construction identical to those of assemblies with fire-resistance ratings determined per ASTM E 119 by a testing and inspecting agency, by equivalent concrete masonry thickness, or by another means, as acceptable to authorities having jurisdiction.

D. Sample Panels: Before installing unit masonry, build sample panels, using materials indicated for the completed Work, to verify selections made under sample Submittals and to demonstrate

aesthetic effects. Build sample panels for each type of exposed unit masonry assembly in sizes as indicated on drawings.

1. Locate panel in the locations indicated or, if not indicated, as directed by Architect.
2. Clean exposed faces of panels with masonry cleaner indicated.
3. Where masonry is to match existing, erect panels adjacent and parallel to existing surface.
4. Protect approved sample panels from the elements with weather-resistant membrane.
5. Maintain sample panels during construction in an undisturbed condition as a standard for judging the completed Work.
6. Approval of sample panels is for color, texture, and blending of masonry units; relationship of mortar and sealant colors to masonry unit colors; tooling of joints; aesthetic qualities of workmanship; and other material and construction qualities specifically approved by Architect in writing.
   a. Note approved sample panels not meeting the above requirements shall be removed and built back to quality standards.
   b. Approval of sample panels does not constitute approval of deviations from the Contract Documents contained in sample panels, unless such deviations are specifically approved by Architect in writing.
7. Demolish and remove sample panel when directed.

E. If control joints are not shown on drawings, it is the Contractor’s responsibility to notify the Architect for placement.

1.6 DELIVERY, STORAGE, AND HANDLING

A. Store masonry units on elevated platforms in a dry location. If units are not stored in an enclosed location, cover tops and sides of stacks with waterproof sheeting, securely tied. If units become wet, do not install until they are dry. Exposed colored masonry block and brick shall be stored on wooden pallets.

B. Deliver preblended, dry mortar mix in moisture-resistant containers designed for lifting and emptying into dispensing silo. Store preblended, dry mortar mix in delivery containers on elevated platforms, under cover, and in a dry location or in a metal dispensing silo with weatherproof cover.

C. Store masonry accessories, including metal items, to prevent corrosion and accumulation of dirt and oil.

1.7 PROJECT CONDITIONS

A. Protection of Masonry: During construction, cover tops of walls, projections, and sills with waterproof sheeting at end of each day's work. Cover partially completed masonry when construction is not in progress. Protect exposed exterior finished materials from mud and dirt splatters with sand or straw.

B. Do not apply uniform floor or roof loads for at least 24 hours and concentrated loads for at least 3 days after building masonry walls or columns.

C. Stain Prevention: Prevent grout, mortar, and soil from staining the face of masonry to be left exposed or painted. Immediately remove grout, mortar, and soil that come in contact with such masonry.

1. Protect base of walls from rain-splashed mud and from mortar splatter by coverings spread on ground and over wall surface.

2. Protect sills, ledges, and projections from mortar droppings.
3. Protect surfaces of window and door frames, as well as similar products with painted and integral finishes, from mortar droppings.
4. Turn scaffold boards near the wall on edge at the end of each day to prevent rain from splashing mortar and dirt onto completed masonry.

D. Cold-Weather Requirements: Do not use frozen materials or materials mixed or coated with ice or frost. Do not build on frozen substrates. Remove and replace unit masonry damaged by frost or by freezing conditions. Comply with cold-weather construction requirements contained in ACI 530.1/ASCE 6/TMS 602.
1. Cold-Weather Cleaning: Use liquid cleaning methods only when air temperature is 40 deg F and above and will remain so until masonry has dried, but not less than 7 days after completing cleaning.

E. Hot-Weather Requirements: Protect unit masonry work when temperature and humidity conditions produce excessive evaporation of water from mortar and grout. Provide artificial shade and wind breaks and use cooled materials as required.
1. When ambient temperature exceeds 100 deg F, or 90 deg F with a wind velocity greater than 8 mph, do not spread mortar beds more than 48 inches ahead of masonry. Set masonry units within one minute of spreading mortar.

PART 2 - PRODUCTS

2.1 CONCRETE MASONRY UNITS

A. General: Provide shapes indicated and as follows:
1. Provide special shapes for lintels, corners, jambs, sash, control joints, headers, bonding, and other special conditions.
2. Provide square-edged units for outside corners, unless indicated as bullnose or other special shape.

B. Concrete Masonry Units: ASTM C 90 (latest revision) and as follows:
1. Unit Compressive Strength: Provide units with minimum average net-area compressive strength of 2000 psi.
2. Weight Classification: Light weight meeting max. 105 pcf density.
3. Size (Width): Manufactured to the following dimensions:
   a. 4 inches nominal; 3-5/8 inches actual.
   b. 6 inches nominal; 5-5/8 inches actual.
   c. 8 inches nominal; 7-5/8 inches actual.
   d. 12 inches nominal; 11-5/8 inches actual.
4. Exposed Faces: Manufacturer's standard color and texture, unless otherwise indicated.
5. Units shall be free of organic impurities that will cause rusting, staining or pop outs, and shall contain no combustible matter. The use of coal cinder aggregate/bottom ash, or similar waste products WILL NOT be allowed.
6. Job Site Testing: Per the request of the Architect, a random sample of the concrete masonry units may be taken from the job site to be tested for compliance with the specifications.
7. All lightweight aggregates used in the concrete units shall be expanded shale, clay or slate stalite materials, produced by the rotary Kiln process, shall conform to ASTM C331, C330 and shall be graded to assure constant texture. Aggregates shall have a maximum absorption rate of 10%.

2.2 BRICK

A. General: Provide shapes indicated and as follows for each form of brick required:
   1. Provide units without cores or frogs and with exposed surfaces finished for ends of sills and caps and for similar applications that would otherwise expose unfinished brick surfaces.

B. Provide special shapes for applications requiring brick of size, form, color, and texture on exposed surfaces that cannot be produced by sawing.
   1. Provide special shapes for applications where stretcher units cannot accommodate special conditions, including those at corners, movement joints, bond beams, sashes, and lintels.
   2. Provide special shapes for applications where shapes produced by sawing would result in sawed surfaces being exposed to view.
   3. Provide special shapes as indicated on drawings.

C. Face Brick: ASTM C 216 Grade SW, Type FBS, and as follows:
   1. Unit Compressive Strength: Provide units with minimum average net-area compressive strength of 3000 psi.
   2. Initial Rate of Absorption: Less than 20 g/30 sq. in. per minute when tested per ASTM C 67.
   3. Efflorescence: Provide brick that has been tested according to ASTM C 67 and is rated "not effloresced."
   4. Size: Manufactured to the following actual dimensions:
      a. Modular: 3-1/2 to 3-5/8 inches wide by 2-1/4 inches high by 7-1/2 to 7-5/8 inches long.
   5. Application: Use where brick is exposed, unless otherwise indicated.
   6. Where shown to "match existing, provide face brick matching color range, texture, and size of existing adjacent brickwork.
   7. Color and Texture: as indicated on drawings.

D. Building (Common) Brick: ASTM C 62, Grade SW, and as follows:
   1. Unit Compressive Strength: Provide units with minimum average net-area compressive strength of 3000 psi.
   2. Size: Manufactured to the following actual dimensions:
      a. Match size specified for face brick.

2.3 MORTAR AND GROUT MATERIALS

A. Portland Cement: ASTM C 150, Type I or II. Provide natural color or white cement as required to produce mortar color indicated.

B. Hydrated Lime: ASTM C 207, Type S.

C. Portland Cement-Lime Mix: Packaged blend of portland cement complying with ASTM C 150, Type I or Type III, and hydrated lime complying with ASTM C 207.

D. Pigmented Mortar: Colored cement or cement-lime formulation.
   1. Color: Color as selected by Architect from manufacturer’s full range of colors or as indicated on drawings.
   2. Products:
      a. Colored Masonry Cement (ASTM-C 91):
         1) Available Manufacturers:
            a) Cemex S.A.B. de C.V.; Richcolor Masonry Cement.

b) Holcim (US) Inc.; Rainbow Mortamix Custom Color Masonry Cement.
c) Argos US; Custom Color Masonry Cement.
d) Giant Cement Company
e) Or approved equal. (submit 10-days prior to bid date)

b. Colored Portland Cement-Lime Mix: (Type – S)
1) Available Manufacturers:
a) Holcim - Rainbow CLS.
b) Argos US; Centurion Colorbond PL.
c) Lehigh Portland Cement Co.; Lehigh Custom Color Portland/Lime.
d) Or approved equal. (submit 10-days prior to bid date)

E. Aggregate for Mortar: ASTM C 144; except for joints less than 1/4 inch thick, use aggregate graded with 100 percent passing the No. 16 sieve.

F. Aggregate for Grout: ASTM C 404.

G. Cold-Weather Admixture: Nonchloride, noncorrosive, accelerating admixture complying with ASTM C 494, Type C, and recommended by the manufacturer for use in masonry mortar of composition indicated.

H. Water: Potable (low chlorine content).

2.4 REINFORCING STEEL

A. Uncoated Steel Reinforcing Bars: ASTM A 615, Grade 60.

2.5 MASONRY JOINT REINFORCEMENT

A. General: ASTM A 951and as follows:
1. Hot-dip galvanized, carbon-steel wire for both interior and exterior walls.
2. Wire Size for Side Rods: W2.8 or 0.188-inch diameter.
3. Wire Size for Cross Rods: W2.8 or 0.188-inch diameter.
4. Provide in lengths of not less than 10 feet, with prefabricated corner and tee units where indicated.

B. For single-wythe masonry, provide either ladder or truss type with single pair of side rods and cross rods spaced not more than 16 inches o.c.

C. For multiwythe masonry, provide types as follows:
1. Ladder type with perpendicular cross rods spaced not more than 16 inches o.c. and 1 side rod for each face shell of hollow masonry units more than 4 inches in width, plus 1 side rod for each wythe of masonry 4 inches or less in width.
2. Adjustable (2-piece) type with single pair of side rods and cross ties spaced not more than 16 inches o.c. and with separate adjustable veneer ties engaging the cross ties. Cross ties are either U-shaped with eyes or rectangular. Space side rods for embedment within each face shell of backup wythe and size adjustable ties to extend at least halfway through outer wythe but with at least 5/8-inch cover on outside face.
a. Use where indicated and where horizontal joints of facing wythe do not align with those of backup wythe.

2.6 TIES AND ANCHORS, GENERAL

A. General: Provide ties and anchors, specified in subsequent articles, made from materials that comply with this Article, unless otherwise indicated.

B. Hot-Dip Galvanized Carbon-Steel Wire: ASTM A 82; with ASTM A 153, Class B-2 coating.

C. Galvanized Steel Sheet: ASTM A 653/A 653M, G60, commercial-quality, steel sheet zinc coated by hot-dip process on continuous lines before fabrication.

D. Steel Sheet, Galvanized after Fabrication: ASTM A 366/A 366M cold-rolled, carbon-steel sheet hot-dip galvanized after fabrication to comply with ASTM A 153.

E. Steel Plates, Shapes, and Bars: ASTM A 36/A 36M.

2.7 VENEER TIES AT CMU BACKUP WALLS

A. General: Rectangular units with closed ends and not less than 4 inches wide. Z-shaped ties with ends bent 90 degrees to provide hooks not less than 2 inches long may be used for masonry constructed from solid units or hollow units laid with cells horizontal.
   1. Where coursing between wythes does not align, use adjustable ties composed of 2 parts; 1 with pintles, the other with eyes; with maximum misalignment of 1-1/4 inches.
   2. Note different cavity depths on drawings.

B. Wire: Fabricate from hot-dip galvanized steel wire.

2.8 VENEER TIES AT STUD BACKUP WALLS

A. General: Provide “2-SEAL TIE” from Hohmann & Barnard, Inc. single screw veneer ties for metal stud construction. Submit substitutions 10 days prior to bid.

B. Fabricated from carbon steel with premium quality organic polymer coating, the 2-SEAL TIE has a dual-diameter barrel with factory-installed EPDM washers to seal both the face of the insulation and the air/vapor barrier

C. Finishes: Provide hot-dipped galvanized finish on wire tie.

D. Coordinate overall sizes of ties as to not crush insulation and work with size of cavity and masonry unit. See drawings for details.

2.9 ADJUSTABLE ANCHORS FOR CONNECTING TO STEEL FRAME

A. General: Provide two-piece hot-dip galvanized steel assemblies that allow vertical or horizontal adjustment but resist tension and compression forces perpendicular to plane of wall.
   1. For anchorage to steel framing: provide manufacturer’s standard anchors with crimped ¼”-inch-diameter wire anchor section for welding to steel and triangular-shaped section 0.1875-inch diameter sized to extend within 1 inch of masonry face

2.10 RIGID ANCHORS

A. General: Fabricate from steel bars as follows:
   1. 1-1/2 inches wide by 1/4 inch thick by 24 inches long, with ends turned up 2 inches or with cross pins.
   2. Finish: Hot-dip galvanized to comply with ASTM A 153.

2.11 MISCELLANEOUS ANCHORS

A. Anchor Bolts: Steel bolts complying with ASTM A 307, Grade A; with ASTM A 563 hex nuts and, where indicated, flat washers; hot-dip galvanized to comply with ASTM A 153, Class C; of diameter and length indicated and in the following configurations:
   1. Headed bolts.
   2. Nonheaded bolts, bent or straight in manner indicated.

2.12 EMBEDDED FLASHING MATERIALS

A. Metal Flashing: Provide metal flashing**,** where flashing is exposed or partly exposed and where indicated, complying with Division 07 Section "Sheet Metal Flashing and Trim."

   1. Metal Drip Edges: Fabricate from stainless steel, prefinished aluminum or as indicated on Drawings. Extend at least 3 inches into wall and 1/2 inch out from wall, with outer edge bent down 30 degrees.
   2. Metal Flashing Terminations: Fabricate from stainless steel, prefinished aluminum or as indicated on Drawings. Extend at least 3 inches into wall and out to exterior face of wall. At exterior face of wall, bend metal back on itself for 3/4 inch and down into joint 3/8 inch to form a stop for retaining sealant backer rod.

B. For flashing partly exposed to the exterior, use metal flashing specified above. For flashing not exposed to the exterior, use one of the following flexible flashings, unless otherwise indicated:

   1. Copper Fabric Flashing (Asphalt Free): Manufacturer's standard laminated flashing consisting of 5-oz./sq. ft. sheet copper bonded between 2 layers of glass-fiber cloth. Use only where flashing is fully concealed in masonry or cut flush with face of joint.
   2. Stainless Steel Fabric Flashing (Asphalt Free): 304 Stainless steel core, ASTM A167, with polymer fabric laminated to one stainless steel face with non-asphalt adhesive and polyether sealant.
      a. Products of manufacturers listed below meeting indicated standards and specified manufacturer's product data characteristics, are acceptable for use, subject to compliance with specified requirements.
         1) York Manufacturing, Inc.; Multi-Flash SS
         2) STS Coatings, Inc.; Gorilla Flash Stainless Fabric
         3) Illinois Products, Inc.; IPCO Stainless Steel Fabric Flashing
         4) TK Products, Inc.; TK TWF

C. Solder and Sealants for Sheet Metal Flashings: As recommended by flashing manufacturer and compatible with insulations and other substrates.

D. Adhesives, Primers, and Seam Tapes for Flashings: Flashing manufacturer's standard products or products recommended by flashing manufacturer and compatible with insulations and other substrates.

E. Provide preformed corners and end-dams. Use minimum 26 gauge stainless steel pre-manufactured corners. Adhere and seal to flashing per manufacturers recommendations.

F. Termination bar: Rigid PVC or stainless steel termination bar with sealant catch lip.

2.13 MISCELLANEOUS MASONRY ACCESSORIES

A. Compressible Filler: Premolded filler strips complying with ASTM D 1056, Grade 2A1; compressible up to 35 percent; of width and thickness indicated; formulated from neoprene.

B. Preformed Control-Joint Gaskets: Made from styrene-butadiene-rubber compound, complying with ASTM D 2000, Designation M2AA-805 and designed to fit standard sash block and to maintain lateral stability in masonry wall.

C. Bond-Breaker Strips: Asphalt-saturated, organic roofing felt complying with ASTM D 226, Type I (No. 15 asphalt felt).

D. Weep/Vent Products: Use the following, unless otherwise indicated:
   1. Mesh Weep/Vent: Provide free-draining mesh, made from polyethylene strands. At all flashing conditions, provide weep vents that are full height and width of head joint and depth 1/8 inch less than depth of outer wythe; in color selected from manufacturer's standard to match mortar.

2.14 CAVITY-WALL INSULATION

A. Extruded-Polystyrene Board Insulation: Rigid, cellular, polystyrene thermal insulation with closed cells and integral high-density skin; formed by the expansion of polystyrene base resin in an extrusion process to comply with ASTM C 578, Type IV. Provide “Styrofoam Cavitymate SC” from Dow Building Materials (or approved substitute). Board shall have shiplaped or tongue & grooved edge. Substitutions must be submitted 10 days prior to bid.

B. Adhesive: Type recommended by insulation board manufacturer for application indicated.

2.15 MASONRY CLEANERS

A. Job-Mixed Detergent Solution: Solution of 1/2-cup dry measure tetrasodium polyphosphate and 1/2-cup dry measure laundry detergent dissolved in 1 gal. of water.

B. Proprietary Acidic Cleaner: Manufacturer's standard-strength cleaner designed for removing mortar/grout stains, efflorescence, and other new construction stains from new masonry without discoloring or damaging masonry surfaces. Use product expressly approved for intended use by cleaner manufacturer and manufacturer of masonry units being cleaned.
   1. For masonry not subject to metallic oxidation stains, use formulation consisting of a concentrated blend of surface-acting acids, chelating, and wetting agents.
   2. For masonry subject to metallic oxidation stains, use formulation consisting of a liquid blend of organic and inorganic acids, and special inhibitors.

2.16 MORTAR AND GROUT MIXES

A. General: Do not use admixtures, including pigments, air-entraining agents, accelerators, retarders, water-repellent agents, antifreeze compounds, or other admixtures, unless otherwise indicated.
   1. Do not use calcium chloride in mortar or grout.
   2. Use integral water repellant for color integral CMU as noted in 2.1-D previously.

B. Mortar for Unit Masonry: Comply with ASTM C 270, Property Specification.
   1. Limit cementitious materials in mortar to portland cement, mortar cement, and lime.
   2. For masonry below grade, in contact with earth, and where indicated, use Type S.
   3. For reinforced masonry and where indicated, use Type S.

4. For exterior, above-grade, load-bearing and non-load-bearing walls and parapet walls; for interior load-bearing walls; for interior non-load-bearing partitions; and for other applications where another type is not indicated, use Type S.

C. Grout for Unit Masonry: Comply with ASTM C 476.
1. Use grout of type indicated or, if not otherwise indicated, of type (fine or coarse) at time of placement that will completely fill spaces intended to receive grout.
2. Use fine grout in grout spaces less than 2 inches in horizontal dimension, unless otherwise indicated.
3. Use course grout in grout spaces 2 inches or more in horizontal dimension, unless otherwise indicated.

PART 3 - EXECUTION

3.1 EXAMINATION

A. Examine conditions, with Installer present, for compliance with requirements for installation tolerances and other conditions affecting performance.
1. For the record, prepare written report, endorsed by Installer, listing conditions detrimental to performance.

B. Before installation, examine rough-in and built-in construction to verify actual locations of piping connections.

3.2 INSTALLATION, GENERAL

A. Thickness: Build cavity and composite walls and other masonry construction to the full thickness shown. Build single-wythe walls to the actual widths of masonry units, using units of widths indicated.

B. Build chases and recesses to accommodate items specified in this Section and in other Sections of the Specifications.

C. Leave openings for equipment to be installed before completing masonry. After installing equipment, complete masonry to match the construction immediately adjacent to the opening.

D. Cut masonry units with motor-driven saws to provide clean, sharp, unchipped edges. Cut units as required to provide a continuous pattern and to fit adjoining construction. Where possible, use full-size units without cutting. Allow units cut with water-cooled saws to dry before placing, unless wetting of units is specified. Install cut units with cut surfaces and, where possible, cut edges concealed.

E. Select and arrange units for exposed unit masonry to produce a uniform blend of colors and textures.
1. Mix units from several pallets or cubes as they are placed.

F. Matching Existing Masonry: Match coursing, bonding, color, and texture of existing masonry if indicated on drawings.

3.3 CONSTRUCTION TOLERANCES

A. Comply with tolerances in ACI 530.1/ASCE 6/TMS 602 and the following:

B. For conspicuous vertical lines, such as external corners, door jambs, reveals, and expansion and control joints, do not vary from plumb by more than 1/4 inch in 20 feet, nor 1/2 inch maximum.

C. For vertical alignment of exposed head joints, do not vary from plumb by more than 1/4 inch in 10 feet, nor 1/2 inch maximum.

D. For conspicuous horizontal lines, such as exposed lintels, sills, parapets, and reveals, do not vary from level by more than 1/4 inch in 20 feet, nor 1/2 inch maximum.

E. For exposed bed joints, do not vary from thickness indicated by more than plus or minus 1/8 inch, with a maximum thickness limited to 1/2 inch. Do not vary from bed-joint thickness of adjacent courses by more than 1/8 inch.

F. For exposed head joints, do not vary from thickness indicated by more than plus or minus 1/8 inch. Do not vary from adjacent bed-joint and head-joint thicknesses by more than 1/8 inch.

3.4 LAYING MASONRY WALLS

A. Lay out walls in advance for accurate spacing of surface bond patterns with uniform joint thicknesses and for accurate location of openings, movement-type joints, returns, and offsets. Avoid using less-than-half-size units, particularly at corners, jambs, and, where possible, at other locations.

B. Bond Pattern for Exposed Masonry: Lay exposed masonry in the following bond pattern; do not use units with less than nominal 4-inch horizontal face dimensions at corners or jambs.
   1. One-half running bond with vertical joint in each course centered on units in courses above and below.
   2. Or as indicated on Drawings.

C. Lay concealed masonry with all units in a wythe in running bond or bonded by lapping not less than 2 inches. Bond and interlock each course of each wythe at corners. Do not use units with less than nominal 4-inch horizontal face dimensions at corners or jambs.

D. Stopping and Resuming Work: In each course, rack back one-half-unit length for one-half running bond or one-third-unit length for one-third running bond; do not tooth. Clean exposed surfaces of set masonry, wet clay masonry units lightly if required, and remove loose masonry units and mortar before laying fresh masonry.

E. Built-in Work: As construction progresses, build in items specified under this and other Sections of the Specifications. Fill in solidly with masonry around built-in items.

F. Fill space between hollow-metal frames and masonry solidly with mortar, unless otherwise indicated.

G. Fill cores in hollow concrete masonry units with grout 24 inches under bearing plates, beams, lintels, posts, and similar items, unless otherwise indicated.

H. Build non-load-bearing interior partitions full height of story to underside of solid floor or roof structure above, unless otherwise indicated.
   1. Install compressible filler in joint between top of partition and underside of structure above.

2. At fire-rated partitions, install firestopping in joint between top of partition and underside of structure above to comply with Division 07.

3.5 MORTAR BEDDING AND JOINTING

A. Lay hollow masonry units as follows:
1. With full mortar coverage on horizontal and vertical face shells.
2. Bed webs in mortar in starting course on footings and in all courses of piers, columns, and pilasters, and where adjacent to cells or cavities to be filled with grout.
3. For starting course on footings where cells are not grouted, spread out full mortar bed, including areas under cells.

B. Lay solid brick-size masonry units with completely filled bed and head joints; butter ends with sufficient mortar to fill head joints and shove into place. Do not deeply furrow bed joints or slush head joints.
1. At cavity walls, bevel beds away from cavity, to minimize mortar protrusions into cavity. As work progresses, trowel mortar fins protruding into cavity flat against the cavity face of the brick.

C. Tool exposed joints slightly concave when thumbprint hard, using a jointer larger than the joint thickness, unless otherwise indicated.

D. Cut joints flush for masonry walls to receive plaster or other direct-applied finishes (other than paint), unless otherwise indicated.

3.6 BONDING OF MULTIWYTHE MASONRY

A. Use continuous horizontal-joint reinforcement installed in horizontal mortar joints to bond wythes together. Stagger ties in alternate courses.

B. Use bonding system indicated on Drawings.

C. Corners: Provide interlocking masonry unit bond in each wythe and course at corners, unless otherwise indicated.
1. Provide continuity with masonry joint reinforcement at corners by using prefabricated "L" units as well as masonry bonding.

D. Intersecting and Abutting Walls: Unless vertical expansion or control joints are shown at juncture, bond walls together as follows:
1. Provide individual metal ties not more than 16 inches o.c.
2. Provide continuity with masonry joint reinforcement by using prefabricated "T" units.
3. Provide rigid metal anchors not more than 24 inches o.c. If used with hollow masonry units, embed ends in mortar-filled cores.

3.7 CAVITIES

A. **Keep cavities clean of mortar droppings and other materials during construction**.
1. Use wood strips temporarily placed in cavity to collect mortar droppings. As work progresses, remove strips, clean off mortar droppings, and replace in cavity.

B. Coat cavity face of backup wythe to comply with Division 07 Section "Bituminous Dampproofing."

C. Installing Cavity-Wall Insulation: Place small dabs of adhesive spaced approximately 12 inches o.c. both ways, on inside face of insulation boards, or attach with plastic fasteners designed for this purpose. Fit courses of insulation between wall ties and other confining obstructions in cavity, with edges butted tightly both ways. Press units firmly against inside wythe of masonry or other construction as shown.
   1. Fill cracks and open gaps in insulation with crack sealer compatible with insulation and masonry.

3.8 HORIZONTAL MASONRY JOINT REINFORCEMENT

A. General: Provide continuous masonry joint reinforcement as indicated. Install entire length of longitudinal side rods in mortar with a minimum cover of 5/8 inch on exterior side of walls, 1/2 inch elsewhere. Lap reinforcement a minimum of 6 inches. This reinforcement is in addition to continuous reinforcement.
   1. Space reinforcement not more than 16 inches o.c.
   2. Space reinforcement not more than 8 inches o.c. in foundation walls and parapet walls.
   3. Provide reinforcement not more than 8 inches above and below wall openings and extending 12 inches beyond openings.

B. Cut or interrupt joint reinforcement at control and expansion joints, unless otherwise indicated.

C. Provide continuity at corners and wall intersections by using prefabricated "L" and "T" sections. Cut and bend reinforcing units as directed by manufacturer for continuity at returns, offsets, column fireproofing, pipe enclosures, and other special conditions.

3.9 ANCHORING MASONRY TO STRUCTURAL MEMBERS

A. Anchor masonry to structural members where masonry abuts or faces structural members to comply with the following:
   1. Provide an open space not less than 1 inch in width between masonry and structural member, unless otherwise indicated. Keep open space free of mortar or other rigid materials.
   2. Anchor masonry to structural members with flexible anchors embedded in masonry joints and attached to structure.
   3. Space anchors as indicated, but not more than 24 inches o.c. vertically and 36 inches o.c. horizontally.

3.10 CONTROL AND EXPANSION JOINTS

A. General: Install control and expansion joints in unit masonry where indicated. Build-in related items as masonry progresses. Do not form a continuous span through movement joints unless provisions are made to prevent in-plane restraint of wall or partition movement. If joints are not indicated, install them as per National Concrete Masonry Association (NCMA) and Brick Industry Association (BIA) recommendations.

B. Form control joints in concrete masonry as follows:
   1. Install preformed control-joint gaskets designed to fit standard sash block.
   2. Install interlocking units designed for control joints. Install bond-breaker strips at joint. Keep head joints free and clear of mortar or rake joint.

C. Form expansion joints in brick made from clay or shale as follows:

1. Where indicated on drawings, build flanges of metal expansion strips into masonry. Lap each joint 4 inches in direction of water flow. Seal joints below grade and at junctures with horizontal expansion joints, if any.
2. Form open joint of width indicated, but not less than 3/8 inch for installation of sealant and backer rod specified in Division 07 Section "Sealants." Keep joint free and clear of mortar.

D. Build in horizontal, pressure-relieving joints where indicated; construct joints by either leaving an air space or inserting a compressible filler of width required for installing sealant and backer rod specified in Division 07 Section "Sealants."
1. Locate horizontal, pressure-relieving joints beneath shelf angles supporting masonry veneer and attached to structure behind masonry veneer.

E. See quality assurance, 1.5-E, control joint placement.

3.11 LINTELS

A. Install steel lintels where indicated.

B. Provide masonry lintels where shown and where openings of more than 12 inches for brick-size units and 24 inches for block-size units are shown without structural steel or other supporting lintels.
1. Provide precast lintels made from concrete matching concrete masonry units in color, texture, and compressive strength and with reinforcing bars indicated or required to support loads indicated. Cure precast lintels by the same method used for concrete masonry units.
2. Provide prefabricated or built-in-place masonry lintels. Use specially formed bond beam units with reinforcing bars placed as indicated and filled with coarse grout. Cure precast lintels before handling and installing. Temporarily support built-in-place lintels until cured.

C. Provide minimum bearing of 8 inches at each jamb, unless otherwise indicated.

3.12 FLASHING, WEEP HOLES, AND VENTS

A. General: Install embedded flashing and weep holes in masonry at shelf angles, lintels, ledges, other obstructions to downward flow of water in wall, and where indicated.

B. Prepare masonry surfaces so they are smooth and free from projections that could puncture flashing. Unless otherwise indicated, place through-wall flashing on sloping bed of mortar and apply sealant under flashing. Cover flashing with mortar. Before covering with mortar, seal penetrations in flashing with adhesive, sealant, or tape as recommended by flashing manufacturer.

C. Install flashing as follows:
1. At multiwythe masonry walls, including cavity walls, extend flashing from exterior face of outer wythe of masonry, through outer wythe, turned up a minimum of 8 inches, and through inner wythe to within 1/2 inch of the interior face of the wall in exposed masonry. Where interior surface of inner wythe is concealed by furring, carry flashing completely through inner wythe and turn flashing up approximately 2 inches, unless otherwise indicated.

2. At masonry-veneer walls, extend flashing from exterior face of veneer, through veneer, up face of sheathing at least 8 inches, and behind air-infiltration barrier or building paper. Terminate flashing with a non-corrosive termination bar per manufacturer's recommendations.
3. At lintels and shelf angles, extend flashing a minimum of 4 inches into masonry at each end. At heads and sills, extend flashing 4 inches at ends and seal into preformed end-dams per manufacturer's recommendations.
4. Cut flashing off flush with face of wall after masonry wall construction is completed.

D. Install weep holes in the head joints in exterior wythes of the first course of masonry immediately above embedded flashing and as follows:
1. Use specified weep/vent products to form weep holes.
2. Space weep holes 24 inches o.c., unless otherwise indicated.

E. Install reglets and nailers for flashing and other related construction where they are shown to be built into masonry.

F. Install preformed flashing corners per manufacturer's recommendations.

G. Install all laps of flashing with minimum 6" lap. Adhere/seal laps per manufacturer's recommendations.

3.13 REINFORCED UNIT MASONRY INSTALLATION

A. Temporary Formwork and Shores: Construct formwork and shores to support reinforced masonry elements during construction.
1. Construct formwork to conform to shape, line, and dimensions shown. Make it sufficiently tight to prevent leakage of mortar and grout. Brace, tie, and support forms to maintain position and shape during construction and curing of reinforced masonry.
2. Do not remove forms and shores until reinforced masonry members have hardened sufficiently to carry their own weight and other temporary loads that may be placed on them during construction.

B. Placing Reinforcement: Comply with requirements of ACI 530.1/ASCE 6/TMS 602.

C. Grouting: Do not place grout until entire height of masonry to be grouted has attained sufficient strength to resist grout pressure.
1. Comply with requirements of ACI 530.1/ASCE 6/TM for cleanouts and for grout placement, including minimum grout space and maximum pour height

3.14 REPAIRING, POINTING, AND CLEANING

A. Remove and replace masonry units that are loose, chipped, broken, stained, or otherwise damaged or that do not match adjoining units. Install new units to match adjoining units; install in fresh mortar, pointed to eliminate evidence of replacement.

B. Pointing: During the tooling of joints, enlarge voids and holes, except weep holes, and completely fill with mortar. Point up joints, including corners, openings, and adjacent construction, to provide a neat, uniform appearance. Prepare joints for sealant application.

C. In-Progress Cleaning: Clean unit masonry as work progresses by dry brushing to remove mortar fins and smears before tooling joints.

D. Final Cleaning: After mortar is thoroughly set and cured, clean exposed masonry as follows:
   1. Remove large mortar particles by hand with wooden paddles and nonmetallic scrape hoes or chisels.
   2. Test cleaning methods on sample wall panel; leave one-half of panel uncleaned for comparison purposes. Obtain Architect's approval of sample cleaning before proceeding with cleaning of masonry.
   3. Protect adjacent stone and nonmasonry surfaces from contact with cleaner by covering them with liquid strippable masking agent, polyethylene film, or waterproof masking tape.
   4. Wet wall surfaces with water before applying cleaners; remove cleaners promptly by rinsing the surfaces thoroughly with clear water.
   5. Clean brick by the bucket-and-brush hand-cleaning method described in BIA Technical Notes No. 20, using job-mixed detergent solution.
   6. Clean concrete masonry by cleaning method indicated in NCMA TEK 8-2 applicable to type of stain on exposed surfaces.

3.15 MASONRY WASTE DISPOSAL

A. Recycling: Unless otherwise indicated, excess masonry materials are Contractor's property. At completion of unit masonry work, remove from Project site.

END OF SECTION 04 20 00

Division 07 - Thermal & Moisture Protection

SECTION 07 14 16 – FLUID - APPLIED WATERPROOFING

PART 1 - GENERAL

1.1 RELATED DOCUMENTS

A. All of the Contract Documents, including General and Supplementary Conditions and Division 01 General Requirements, apply to the work of this section.

1.2 SUMMARY

A. The work of this section includes, but is not limited to, the following:

1. Fluid applied waterproofing system.
2. Prefabricated drainage composite.
3. Protection board.

B. Related Sections: Other specification sections which directly relate to the work of this section include, but are not limited to, the following:
1. Section 03 30 00 – Cast-In-Place Concrete
2. Section 04 20 00 – Unit Masonry
3. Section 07 27 26 – Fluid-Applied Membrane Air Barriers
4. Section 07 62 00 – Sheet Metal Flashing and Trim
5. Section 07 90 00 – Sealants

1.3 REFERENCE STANDARDS

A. The following standards and publications are applicable to the extent referenced in the text.
B. American Society for Testing and Materials (ASTM)
C836 Standard Specification for High Solids, Cold Liquid-Applied Elastomeric Waterproofing Membrane for Use with Separate Wearing Course
C898 Standard Guide for Use of High Solids Content, Cold Liquid-Applied Elastomeric Waterproofing Membrane with Separate Wearing Course
D412 Standard Test Methods for Rubber Properties in Tension
D903 Standard Test Method for Peel or Stripping Strength of Adhesive Bonds
D1644 Test Methods for Nonvolatile Content of Varnishes
D1970 Standard Specification for Self-Adhering Polymer Modified Bituminous Sheet Materials used as Steep Roofing Underlayment for Ice Dam Protection
D3767 Standard Practice for Rubber – Measurements of Dimensions

1.4 SUBMITTALS

A. Product Data: Submit manufacturer's product data, installation instructions, use limitations and recommendations.
B. Samples: Submit representative samples of the following for approval:
1. Fluid applied membrane
2. Protection board
3. Prefabricated drainage composite
4. Manufacturer's Warranty showing 10 years for material AND installation defects.

1.5 QUALITY ASSURANCE

A. Installer: A firm which has at least 3 years experience in work of the type required by this section.
B. Materials: Fluid applied waterproofing material shall be two part synthetic rubber based

system free of isocyanates and bitumen. For each type of material required for the work of this section, provide primary materials which are the products of one manufacturer.

C. Pre-Installation Conference: A pre-installation conference shall be held prior to commencement of field operations to establish procedures to maintain optimum working conditions and to coordinate this work with related and adjacent work. Agenda for meeting shall include review of special details and flashing. Product representative MUST be in attendance of this meeting.

1.6 DELIVERY, STORAGE AND HANDLING

A. Deliver materials and products in labeled packages. Store and handle in strict compliance with manufacturer's instructions, recommendations and material safety data sheets. Protect from damage from sunlight, weather, excessive temperatures and construction operations. Remove damaged material from the site and dispose of in accordance with applicable regulations.

1. Do not double-stack pallets of waterproofing on the job site. Provide cover on top and all sides, allowing for adequate ventilation.
2. Store drainage composite or protection board flat and off the ground. Provide cover on top and all sides.
3. Protect waterproofing materials from freezing. In cool temperatures, store the material for several hours at room temperature to facilitate mixing and application.

B. Sequence deliveries to avoid delays, but minimize on-site storage.

1.7 PROJECT CONDITIONS

A. Perform work only when existing and forecasted weather conditions are within the limits established by the manufacturer of the materials and products used.

B. Proceed with installation only when substrate construction and preparation work is complete and in condition to receive membrane waterproofing.

PART 2 - PRODUCTS

2.1 MATERIALS

A. Fluid Applied Waterproofing Membranes: Procor fluid applied membranes by Grace Construction Products; a two part, self-curing synthetic rubber based material. Procor fluid applied membranes meet or exceed the performance requirements of ASTM C836 and other ASTM standards as shown in the following table. Substitutions requests in compliance with Division 01 may be submitted 10 days prior to bid for evaluation.

B. Waterproofing Membrane Physical Properties:

PHYSICAL PROPERTIES FOR PROCOR FLUID APPLIED MEMBRANES:

Property	Test Method	Typical Value
Color		Terra cotta
Cured Film Thickness	ASTM D 3767 Method A	1.5 mm (0.060") nominal
Solids Content	ASTM D 1644	100%
Flexibility, 180° bend over 25 mm (1") mandrel at 32°C (-25°F)	ASTM D 1970	Unaffected
Elongation	ASTM D 412	500% minimum
Peel Adhesion to Concrete	ASTM D 903 Modified*	880 N/m (5 lbs./in.)

C. Prefabricated Drainage/Protection Board Composite: Hydroduct 660 Drainage Composite by Grace Construction Products or CCW 9000 by Carlisle for horizontal surfaces. Hydroduct 220 Drainage Composite by Grace Construction Products or CCW-6200 by Carlisle for all vertical surfaces. Drainage composite shall be designed to promote positive drainage while serving as a protection course. Substitutions requests in compliance with Division 01 may be submitted 10 days prior to bid for evaluation.

PART 3 - EXECUTION

3.1 EXAMINATION

A. The installer shall examine conditions of substrates and other conditions under which this work is to be performed and notify the contractor, in writing, of circumstances detrimental to the proper completion of the work. Do not proceed with work until unsatisfactory conditions are corrected.

3.2 PREPARATION OF SUBSTRATES

A. Refer to manufacturer's literature for requirements for preparation of substrates. Surfaces shall be structurally sound and free of voids, spalled areas, loose aggregate and sharp protrusions. Remove contaminants such as grease, oil and wax from exposed surfaces. Remove dust, dirt, loose stone and debris. Use repair materials and methods which are acceptable to manufacturer of the fluid applied waterproofing.

B. Cast-In-Place Concrete Substrates:
   1. Waterproofing application may commence as soon as the substrate can accept foot traffic. Surface shall be free of any visible water.
   2. Fill form tie rod holes with concrete and finish flush with surrounding surface.
   3. Repair bugholes over 13 mm (0.5") in length and 6 mm (0.25") deep and finish flush with surrounding surface.
   4. Remove scaling to sound, unaffected concrete and repair exposed area.
   5. Grind irregular construction joints to suitable flush surface.

C. Masonry Substrates: Apply waterproofing over concrete block and brick with smooth trowel-cut mortar joints or parge coat.

D. Plywood Substrates: Pretreat all plywood joints with 75 mm (3") wide, reinforced self-adhesive tape. Secure all fasteners.

E. Related Materials: Treat joints and install flashing as recommended by waterproofing manufacturer.

3.3 INSTALLATION

A. Refer to manufacturer's literature for recommendations on installation, including but not limited to, the following:
   1. Apply minimum 1.5 mm (.060") in all areas to be waterproofed. Apply minimum 3 mm (0.125") in all detail areas.
   2. If area to be waterproofed is in direct sunlight and temperature is rising, apply "scratch coat" (a thin application of fluid applied waterproofing) prior to the full application of the waterproofing membrane.

3. In applications where a minimum slope of 11 mm/m (0.13”/ft.) can not be achieved, a two coat application of Procor membrane is recommended to achieve the total thickness.
4. Apply protection board and related materials in accordance with manufacturer’s recommendations.

3.4 CLEANING AND PROTECTION

A. Remove any masking materials after installation. Clean any stains on materials which would be exposed in the completed work.

B. Protect completed membrane waterproofing from subsequent construction activities as recommended by manufacturer.

END OF SECTION 07 14 16

SECTION 07 62 00 - SHEET METAL FLASHING AND TRIM

PART 1 - GENERAL

1.1 SUMMARY

A. Section Includes:

1. Manufactured reglets with counterflashing.
2. Formed roof-drainage sheet metal fabrications.
3. Formed low-slope roof sheet metal fabrications.
4. Formed steep-slope roof sheet metal fabrications.
5. Formed wall sheet metal fabrications.

1.2 PREINSTALLATION MEETINGS

A. Preinstallation Conference: Conduct conference at Project site.

1.3 ACTION SUBMITTALS

A. Product Data: For each type of product.

B. Shop Drawings: For sheet metal flashing and trim.

1. Include plans, elevations, sections, and attachment details.
2. Distinguish between shop- and field-assembled work.
3. Include identification of finish for each item.
4. Include pattern of seams and details of termination points, expansion joints and expansion-joint covers, direction of expansion, roof-penetration flashing, and connections to adjoining work.

C. Samples: For each exposed product and for each color and texture specified.

1.4 INFORMATIONAL SUBMITTALS

A. Product certificates.

B. Product test reports.

C. Sample warranty.

1.5 CLOSEOUT SUBMITTALS

A. Maintenance data.

1.6 QUALITY ASSURANCE

A. Fabricator Qualifications: Employs skilled workers who custom fabricate sheet metal flashing and trim similar to that required for this Project and whose products have a record of successful in-service performance.

1. For copings and roof edge flashings that are SPRI ES-1 tested, shop shall be listed as able to fabricate required details as tested and approved.

1.7 WARRANTY

A. Special Warranty on Finishes: Manufacturer agrees to repair finish or replace sheet metal flashing and trim that shows evidence of deterioration of factory-applied finishes within specified warranty period.

1. Finish Warranty Period: 20 years from date of Substantial Completion.

PART 2 - 2, Grade

2.1 PERFORMANCE REQUIREMENTS

A. General: Sheet metal flashing and trim assemblies shall withstand wind loads, structural movement, thermally induced movement, and exposure to weather without failure due to defective manufacture, fabrication, installation, or other defects in construction. Completed sheet metal flashing and trim shall not rattle, leak, or loosen, and shall remain watertight.

B. Sheet Metal Standard for Flashing and Trim: Comply with NRCA's "The NRCA Roofing Manual" and SMACNA's "Architectural Sheet Metal Manual" requirements for dimensions and profiles shown unless more stringent requirements are indicated.

C. Sheet Metal Standard for Copper: Comply with CDA's "Copper in Architecture Handbook." Conform to dimensions and profiles shown unless more stringent requirements are indicated.

D. SPRI Wind Design Standard: Manufacture and install copings, roof edge flashings tested according to SPRI ES-1 and capable of resisting the following design pressure:

1. Design Pressure: As indicated on Drawings or if not indicated as required by local code.

E. Thermal Movements: Allow for thermal movements from ambient and surface temperature changes.

1. Temperature Change: 120 deg F, ambient; 180 deg F, material surfaces.

2.2 SHEET METALS

A. General: Protect mechanical and other finishes on exposed surfaces from damage by applying strippable, temporary protective film before shipping.

B. Copper Sheet: ASTM B 370, cold-rolled copper sheet, H00 or H01 temper.

1. Manufacturers: Subject to compliance with requirements, available manufacturers offering products that may be incorporated into the Work include, but are not limited to, the following:

a. Hussey Copper Ltd.
b. Revere Copper Products, Inc.

2. Nonpatinated Exposed Finish: Mill.

C. Aluminum Sheet: ASTM B 209, alloy as standard with manufacturer for finish required, with temper as required to suit forming operations and performance required.

1. Color Anodic Finish, Coil Coated: AAMA 611, AA-M12C22A42/A44, Class I, 0.018 mm or thicker.

2. Exposed Coil-Coated Finish:

a. Two-Coat Fluoropolymer: AAMA 620. Fluoropolymer finish containing not less than 70 percent PVDF resin by weight in color coat. Prepare, pretreat, and apply coating to exposed metal surfaces to comply with coating and resin manufacturers' written instructions.

3. Color: As indicated on drawings or if not indicated as selected by Architect from manufacturer's full range.

D. Stainless-Steel Sheet: ASTM A 240/A 240M, Type 304, dead soft, fully annealed; 2D dull, cold rolled finish.

2.3 UNDERLAYMENT MATERIALS

A. Synthetic Underlayment: Laminated or reinforced, woven polyethylene or polypropylene, synthetic roofing underlayment; bitumen free; slip resistant; suitable for high temperatures over 220 deg F; and complying with physical requirements of ASTM D 226/D 226M for Type I and Type II felts.

1. Products: Subject to compliance with requirements, provide one of the following:

a. Atlas Roofing Corporation; Summit.
b. Engineered Coated Products; Nova-Seal II.
c. Kirsch Building Products, LLC; Sharkskin Ultra.
d. SDP Advanced Polymer Products Inc; Palisade.

B. Self-Adhering, High-Temperature Sheet: Minimum 40 mils thick, consisting of a slip-resistant polyethylene- or polypropylene-film top surface laminated to a layer of butyl- or SBS-modified asphalt adhesive, with release-paper backing; specifically designed to withstand high metal temperatures beneath metal roofing. Provide primer according to written recommendations of underlayment manufacturer.

1. Products: Subject to compliance with requirements, provide one of the following:

    a. Carlisle Residential, a division of Carlisle Construction Materials; WIP 300HT.
    b. Grace Construction Products, a unit of W. R. Grace & Co.-Conn.; Grace Ice and Water Shield Ultra.
    c. Henry Company; Blueskin PE200 HT.
    d. Kirsch Building Products, LLC; Sharkskin Ultra SA.
    e. Metal-Fab Manufacturing, LLC; MetShield.
    f. Owens Corning; WeatherLock Specialty Tile & Metal Underlayment.
    g. Polyguard Products, Inc.; Deck Guard HT.
    h. Protecto Wrap Company; Protecto Jiffy Seal Ice & Water Guard HT.
    i. SDP Advanced Polymer Products Inc; Palisade SA-HT.

2. Thermal Stability: ASTM D 1970; stable after testing at 240 deg F or higher.
3. Low-Temperature Flexibility: ASTM D 1970; passes after testing at minus 20 deg F or lower.

C. Slip Sheet: Rosin-sized building paper, 3 lb/100 sq. ft. minimum.

2.4 MISCELLANEOUS MATERIALS

A. General: Provide materials and types of fasteners, solder, protective coatings, sealants, and other miscellaneous items as required for complete sheet metal flashing and trim installation and as recommended by manufacturer of primary sheet metal or manufactured item unless otherwise indicated.

B. Fasteners: Wood screws, annular threaded nails, self-tapping screws, self-locking rivets and bolts, and other suitable fasteners designed to withstand design loads and recommended by manufacturer of primary sheet metal or manufactured item.

1. General: Blind fasteners or self-drilling screws, gasketed, with hex-washer head.

    a. Exposed Fasteners: Heads matching color of sheet metal using plastic caps or factory-applied coating. Provide metal-backed EPDM or PVC sealing washers under heads of exposed fasteners bearing on weather side of metal.
    b. Blind Fasteners: High-strength aluminum or stainless-steel rivets suitable for metal being fastened.
    c. Spikes and Ferrules: Same material as gutter; with spike with ferrule matching internal gutter width.

2. Fasteners for Copper Sheet: Copper, hardware bronze or passivated Series 300 stainless steel.
3. N 00 01 10SECTION 0000200 01 10Aluminum or Series 300 stainless steel.
4. Fasteners for Stainless-Steel Sheet: Series 300 stainless steel.

C. Solder:

1. For Copper: ASTM B 32, with maximum lead content of 0.2 percent.
2. For Stainless Steel: ASTM B 32, Grade Sn60, with acid flux of type recommended by stainless-steel sheet manufacturer.

D. Sealant Tape: Pressure-sensitive, 100 percent solids, polyisobutylene compound sealant tape with release-paper backing. Provide permanently elastic, nonsag, nontoxic, nonstaining tape 1/2 inch wide and 1/8 inch thick.

E. Elastomeric Sealant: ASTM C 920, elastomeric silicone polymer sealant; of type, grade, class, and use classifications required to seal joints in sheet metal flashing and trim and remain watertight.

F. Butyl Sealant: ASTM C 1311, single-component, solvent-release butyl rubber sealant; polyisobutylene plasticized; heavy bodied for hooked-type expansion joints with limited movement.

G. Epoxy Seam Sealer: Two-part, noncorrosive, aluminum seam-cementing compound, recommended by aluminum manufacturer for exterior nonmoving joints, including riveted joints.

H. Bituminous Coating: Cold-applied asphalt emulsion according to ASTM D 1187.

I. Asphalt Roofing Cement: ASTM D 4586, asbestos free, of consistency required for application.

2.5 MANUFACTURED REGLETS

A. Reglets: Units of type, material, and profile required, formed to provide secure interlocking of separate reglet and counterflashing pieces, and compatible with flashing indicated with factory-mitered and -welded corners and junctions and with interlocking counterflashing on exterior face, of same metal as reglet.

1. Manufacturers: Subject to compliance with requirements, provide products by one of the following:

   a. Cheney Flashing Company.
   b. Fry Reglet Corporation.
   c. Heckmann Building Products, Inc.
   d. Hickman, W. P. Company.
   e. Hohmann & Barnard, Inc.
   f. Keystone Flashing Company, Inc.
   g. National Sheet Metal Systems, Inc.
   h. Sandell Manufacturing.

2. Material: Stainless steel, 0.019 inch thick, Aluminum, 0.024 inch thick.
3. Finish: With manufacturer's standard color coating.

2.6 FABRICATION, GENERAL

A. General: Custom fabricate sheet metal flashing and trim to comply with details shown and recommendations in cited sheet metal standard that apply to design, dimensions, geometry, metal thickness, and other characteristics of item required. Fabricate sheet metal flashing and trim in shop to greatest extent possible.

1. Obtain field measurements for accurate fit before shop fabrication.
2. Form sheet metal flashing and trim to fit substrates without excessive oil canning, buckling, and tool marks; true to line, levels, and slopes; and with exposed edges folded back to form hems.
3. Conceal fasteners and expansion provisions where possible. Do not use exposed fasteners on faces exposed to view.

B. Expansion Provisions: Form metal for thermal expansion of exposed flashing and trim.

1. Form expansion joints of intermeshing hooked flanges, not less than 1 inch deep, filled with butyl sealant concealed within joints.
2. Use lapped expansion joints only where indicated on Drawings.

C. Sealant Joints: Where movable, nonexpansion-type joints are required, form metal to provide for proper installation of elastomeric sealant according to cited sheet metal standard.

D. Fabricate cleats and attachment devices from same material as accessory being anchored or from compatible, noncorrosive metal.

E. Fabricate cleats and attachment devices of sizes as recommended by cited sheet metal standard for application, but not less than thickness of metal being secured.

F. Seams: Fabricate nonmoving seams with flat-lock seams. Tin edges to be seamed, form seams, and solder.

G. Seams: Fabricate nonmoving seams with flat-lock seams. Form seams and seal with elastomeric sealant unless otherwise recommended by sealant manufacturer for intended use. With Architects approval, rivet joints where necessary for strength**.**

H. Seams for Aluminum: Fabricate nonmoving seams with flat-lock seams. Form seams and seal with epoxy seam sealer. With Architects approval, rivet joints where necessary for strength**.**

2.7 ROOF-DRAINAGE SHEET METAL FABRICATIONS

A. Hanging Gutters: Fabricate to cross section required, complete with end pieces, outlet tubes, and other accessories as required. Fabricate in minimum 96-inch long sections. Furnish flat-stock gutter brackets and gutter spacers and straps fabricated from same metal as gutters, of size recommended by cited sheet metal standard but with thickness not less than twice the gutter thickness. Fabricate expansion joints, expansion-joint covers, and gutter accessories from same metal as gutters. Shop fabricate interior and exterior corners.

B. Built-in Gutters: Fabricate to cross section required, with riveted and soldered joints, complete with end pieces, outlet tubes, and other special accessories as required. Fabricate in minimum 96-inch long sections. Fabricate expansion joints and accessories from same metal as gutters unless otherwise indicated.
1. Fabricate from the Following Materials:

a. Copper: 16 oz./sq. ft.
b. Stainless Steel: 0.016 inch thick.

C. Downspouts: Fabricate rectangular downspouts to dimensions indicated, complete with mitered elbows. Furnish with metal hangers from same material as downspouts and anchors. Shop fabricate elbows.

1. Hanger Style: Submit options for Architect selection.
2. Fabricate from the following materials:
   a. Aluminum: 0.024 inch thick.

D. Parapet Scuppers: Fabricate scuppers to dimensions required, with closure flange trim to exterior, 4-inch wide wall flanges to interior, and base extending 4 inches beyond cant or tapered strip into field of roof. Fabricate from the following materials:
1. Aluminum: 0.032 inch thick.

E. Conductor Heads: Fabricate conductor heads with flanged back and stiffened top edge and of dimensions and shape required, complete with outlet tubes. Fabricate from the following materials:
1. Aluminum: 0.032 inch thick.

2.8 LOW-SLOPE ROOF SHEET METAL FABRICATIONS

A. Roof Edge Flashing (Gravel Stop) and Fascia Cap: Fabricate in minimum 96-inch long, but not exceeding 12-foot long sections. Furnish with 6-inch wide, joint cover plates. Shop fabricate interior and exterior corners.

1. Fabricate from the Following Materials:
   a. Aluminum: 0.050 inch thick.

B. Copings: Fabricate in minimum 96-inch long, but not exceeding 12-foot long, sections. Fabricate joint plates of same thickness as copings. Furnish with continuous cleats to support edge of external leg and interior leg. Miter corners, fasten and seal solder or weld watertight. Shop fabricate interior and exterior corners.

1. Fabricate from the Following Materials:
   a. Aluminum: 0.050 inch thick.

C. Base Flashing: Shop fabricate interior and exterior corners. Fabricate from the following materials:

1. Copper: 20 oz./sq. ft.
2. Aluminum: 0.040 inch.
3. Stainless Steel: 0.019 inch thick.

D. Counterflashing and Flashing Receivers: Fabricate from the following materials:

1. Copper: 16 oz./sq. ft..
2. Aluminum: 0.032 inch thick.
3. Stainless Steel: 0.019 inch thick.

E. Roof-Penetration Flashing: Fabricate from the following materials:

1. Copper: 16 oz./sq. ft.
2. Stainless Steel: 0.019 inch thick.

F. Roof-Drain Flashing: Fabricate from the following materials:

1. Copper: 12 oz./sq. ft.
2. Stainless Steel: 0.016 inch thick.

2.9 STEEP-SLOPE ROOF SHEET METAL FABRICATIONS

A. Apron, Step, Cricket, and Backer Flashing: Fabricate from the following materials:

1. Copper: 16 oz./sq. ft.

B. Valley Flashing: Fabricate from the following materials:

1. Copper: 16 oz./sq. ft.

C. Drip Edges: Fabricate from the following materials:

1. Copper: 16 oz./sq. ft.

D. Eave, Rake, Ridge, and Hip Flashing: Fabricate from the following materials:

1. Copper: 16 oz./sq. ft.

2.10 WALL SHEET METAL FABRICATIONS

A. Through-Wall Flashing: See Masonry specification.

B. Opening Flashings in Frame Construction: Fabricate head, sill, jamb and similar flashings to extend 4 inches beyond wall openings. Form head and sill flashing with 2-inch high, end dams. Fabricate from the following materials:
1. Aluminum: 0.032 inch thick.
2. Stainless Steel: 0.016 inch thick.

PART 3 - EXECUTION

3.1 INSTALLATION, GENERAL

A. General: Anchor sheet metal flashing and trim and other components of the Work securely in place, with provisions for thermal and structural movement. Use fasteners, solder, protective coatings, separators, sealants, and other miscellaneous items as required to complete sheet metal flashing and trim system.

1. Install sheet metal flashing and trim true to line, levels, and slopes. Provide uniform, neat seams with minimum exposure of solder, welds, and sealant.

2. Install sheet metal flashing and trim to fit substrates and to result in watertight performance. Verify shapes and dimensions of surfaces to be covered before fabricating sheet metal.
3. Space cleats not more than 12 inches apart. Attach each cleat with at least two fasteners. Bend tabs over fasteners.
4. Install exposed sheet metal flashing and trim with limited oil canning, and free of buckling and tool marks.
5. Torch cutting of sheet metal flashing and trim is not permitted.

B. Metal Protection: Where dissimilar metals contact each other, or where metal contacts pressure-treated wood or other corrosive substrates, protect against galvanic action or corrosion by painting contact surfaces with bituminous coating or by other permanent separation as recommended by sheet metal manufacturer or cited sheet metal standard.

1. Coat concealed side of uncoated-aluminum and stainless-steel sheet metal flashing and trim with bituminous coating where flashing and trim contact wood, ferrous metal, or cementitious construction.
2. Underlayment: Where installing sheet metal flashing and trim directly on cementitious or wood substrates, install underlayment and cover with slip sheet.

C. Expansion Provisions: Provide for thermal expansion of exposed flashing and trim. Space movement joints at maximum of 10 feet with no joints within 24 inches of corner or intersection.

1. Form expansion joints of intermeshing hooked flanges, not less than 1 inch (25 mm) deep, filled with sealant concealed within joints.
2. Use lapped expansion joints only where indicated on Drawings.

D. Fasteners: Use fastener sizes that penetrate substrate not less than recommended by fastener manufacturer to achieve maximum pull-out resistance.

E. Conceal fasteners and expansion provisions where possible in exposed work and locate to minimize possibility of leakage. Cover and seal fasteners and anchors as required for a tight installation.

F. Seal joints as required for watertight construction. Prepare joints and apply sealants to comply with requirements in Section 07 92 00 "Joint Sealants."

G. Soldered Joints: Clean surfaces to be soldered, removing oils and foreign matter. Pre-tin edges of sheets with solder to width of 1-1/2 inches; however, reduce pre-tinning where pre-tinned surface would show in completed Work.

1. Do not solder metallic-coated steel and aluminum sheet.
2. Do not use torches for soldering.
3. Heat surfaces to receive solder, and flow solder into joint. Fill joint completely. Completely remove flux and spatter from exposed surfaces.
4. Stainless-Steel Soldering: Tin edges of uncoated sheets, using solder for stainless steel and acid flux. Promptly remove acid flux residue from metal after tinning and soldering. Comply with solder manufacturer's recommended methods for cleaning and neutralization.
5. Copper Soldering: Tin edges of uncoated sheets, using solder for copper.

H. Rivets: Rivet joints in uncoated aluminum where necessary for strength.

3.2 ROOF-DRAINAGE SYSTEM INSTALLATION

A. General: Install sheet metal roof-drainage items to produce complete roof-drainage system according to cited sheet metal standard unless otherwise indicated. Coordinate installation of roof perimeter flashing with installation of roof-drainage system.

B. Hanging Gutters: Join sections with riveted and soldered joints. Provide for thermal expansion. Attach gutters at eave or fascia to firmly anchor them in position. Provide end closures and seal watertight with sealant. Slope to downspouts.

1. Install gutter with expansion joints at locations indicated, but not exceeding, 50 feet apart. Install expansion-joint caps.
2. Install continuous gutter screens on gutters with noncorrosive fasteners, removable or hinged to swing open for cleaning gutters.

C. Built-in Gutters: Join sections with riveted and soldered joints. Provide for thermal expansion. Slope to downspouts. Provide end closures and seal watertight with sealant.

1. Install underlayment layer in built-in gutter trough and extend to drip edge at eaves and under underlayment on roof sheathing. Lap sides minimum of 2 inches over underlying course. Lap ends minimum of 4 inches. Stagger end laps between succeeding courses at least 72 inches. Fasten with roofing nails. Install slip sheet over underlayment.
2. Install gutter with expansion joints at locations indicated, but not exceeding, 50 feet apart. Install expansion-joint caps.

D. Downspouts: Join sections with 1-1/2-inch telescoping joints. Provide hangers with fasteners designed to hold downspouts securely to walls. Locate hangers at top and bottom and at approximately 60 inches o.c.

E. Parapet Scuppers: Continuously support scupper, set to correct elevation, and seal flanges to interior wall face, over cants or tapered edge strips, and under roofing membrane.

F. Conductor Heads: Anchor securely to wall, with elevation of conductor head rim at minimum of 1 inch below scupper or gutter discharge.

3.3 ROOF FLASHING INSTALLATION

A. General: Install sheet metal flashing and trim to comply with performance requirements, sheet metal manufacturer's written installation instructions, and cited sheet metal standard. Provide concealed fasteners where possible, and set units true to line, levels, and slopes. Install work with laps, joints, and seams that are permanently watertight and weather resistant.

B. Roof Edge Flashing: Anchor to resist uplift and outward forces according to recommendations in cited sheet metal standard unless otherwise indicated. Interlock bottom edge of roof edge flashing with continuous cleat anchored to substrate.

C. Copings: Anchor to resist uplift and outward forces according to recommendations in cited sheet metal standard unless otherwise indicated.

D. Pipe or Post Counterflashing: Install counterflashing umbrella with close-fitting collar with top edge flared for elastomeric sealant, extending minimum of 4 inches over base flashing. Install stainless-steel draw band and tighten.

E. Counterflashing: Coordinate installation of counterflashing with installation of base flashing. Insert counterflashing in reglets or receivers and fit tightly to base flashing. Extend counterflashing 4 inches over base flashing. Lap counterflashing joints minimum of 4 inches.

F. Roof-Penetration Flashing: Coordinate installation of roof-penetration flashing with installation of roofing and other items penetrating roof. Seal with elastomeric sealant and clamp flashing to pipes that penetrate roof.

3.4 WALL FLASHING INSTALLATION

A. General: Install sheet metal wall flashing to intercept and exclude penetrating moisture according to cited sheet metal standard unless otherwise indicated. Coordinate installation of wall flashing with installation of wall-opening components such as windows, doors, and louvers.

B. Through-Wall Flashing: Installation of through-wall flashing is specified in Section 04 20 00 "Unit Masonry”.

C. Reglets: Installation of reglets is specified in Section 04 20 00 "Unit Masonry."

D. Opening Flashings in Frame Construction: Install continuous head, sill, jamb and similar flashings to extend 4 inches beyond wall openings.

3.5 CLEANING AND PROTECTION

A. Clean exposed metal surfaces of substances that interfere with uniform oxidation and weathering.

B. Clean and neutralize flux materials. Clean off excess solder.

C. Clean off excess sealants.

D. Remove temporary protective coverings and strippable films as sheet metal flashing and trim are installed unless otherwise indicated in manufacturer's written installation instructions.

END OF SECTION 07 62 00

SECTION 31 31 00 – SOIL TREATMENT

PART 1 - GENERAL

1.1 SUMMARY

A. This Section includes soil treatment for termite control.

1.2 SUBMITTALS

A. Product Data: For each product indicated, including EPA-Registered Label.

B. Product certificates.

C. Soil Treatment Application Report: After application of termiticide is completed, submit report for Owner's record information, including the following as applicable:

1. Date and time of application.
2. Moisture content of soil before application.
3. Brand name and manufacturer of termiticide.
4. Quantity of undiluted termiticide used.
5. Dilutions, methods, volumes, and rates of application used.
6. Areas of application.
7. Water source for application.

1.3 QUALITY ASSURANCE

A. Applicator Qualifications: A pest control operator who is licensed according to regulations of authorities having jurisdiction to apply termite control treatment in jurisdiction where Project is located.

B. Regulatory Requirements: Formulate and apply termiticides, and label with a Federal registration number, to comply with EPA regulations and authorities having jurisdiction.

1.4 WARRANTY

A. Soil Termiticide Special Warranty: Manufacturer's standard form, signed by applicator and Contractor, certifying that applied soil termiticide treatment will prevent infestation of subterranean termites. If subterranean termite activity or damage is discovered within three years from date of Substantial Completion, re-treat soil and repair or replace damage caused by termite infestation.

PART 2 - PRODUCTS

2.1 TERMITE CONTROL

A. Soil Treatment: EPA-registered termiticide complying with requirements of authorities having jurisdiction, in a soluble or emulsible, concentrated formulation that dilutes with water or foaming agent. Use only soil treatment solutions that are not harmful to plants.

1. Available Manufacturers: Subject to compliance with requirements, manufacturers offering products that may be incorporated into the Work include, but are not limited to, the following:

a. AgrEvo Environmental Health, Inc.; a company of Hoechst and Schering, Berlin.
b. American Cyanamid Co.; Agricultural Products Group; Specialty Products Department.
c. Bayer Corp.; Garden & Professional Care.
d. DowElanco.
e. FMC Corp.; Pest Control Specialties.
f. Zeneca Professional Products.

PART 3 - EXECUTION

3.1 PREPARATION

A. Remove all extraneous sources of wood cellulose and other edible materials such as wood debris, tree stumps and roots, stakes, formwork, and construction waste wood from soil and around foundations.

3.2 SOIL TREATMENT APPLICATION

A. Apply soil treatment at the label volume and rate for the maximum termiticide concentration allowed for each specific use, according to the product's EPA-Registered Label.

1. Mix termiticide solution to a uniform consistency.
2. Apply to produce a continuous horizontal and vertical termiticidal barrier or treated zone around and under building construction. Distribute the treatment evenly.
3. Slabs-on-Grade and Basement Slabs: Under ground-supported slab construction, including footings, building slabs, and attached slabs as an overall treatment. Treat soil materials before concrete footings and slabs are placed.
4. Foundations: Adjacent soil including soil along entire inside perimeter of foundation walls, along both sides of interior partition walls, around plumbing pipes and electric conduit penetrating slab, and around interior column footers, piers, and chimney bases; and along entire outside perimeter, from grade to bottom of footing. Avoid soil washout around footings.
5. Crawlspaces: Soil under and adjacent to foundations. Treat adjacent areas including around entrance platform, porches, and equipment bases. Apply overall treatment only where attached concrete platform and porches are on fill or ground.
6. Masonry: Treat voids.
7. Penetrations: At expansion joints, control joints, and areas where slabs will be penetrated.

B. Avoid disturbance of treated soil after application. Keep off treated areas until completely dry.

C. Protect termiticide solution, dispersed in treated soils and fills, from being diluted until ground-supported slabs are installed. Use waterproof barrier according to EPA-Registered Label instructions.

D. Post warning signs in areas of application.

E. Reapply soil treatment solution to areas disturbed by subsequent excavation, grading, landscaping, or other construction activities following application.

END OF SECTION 31 31 00