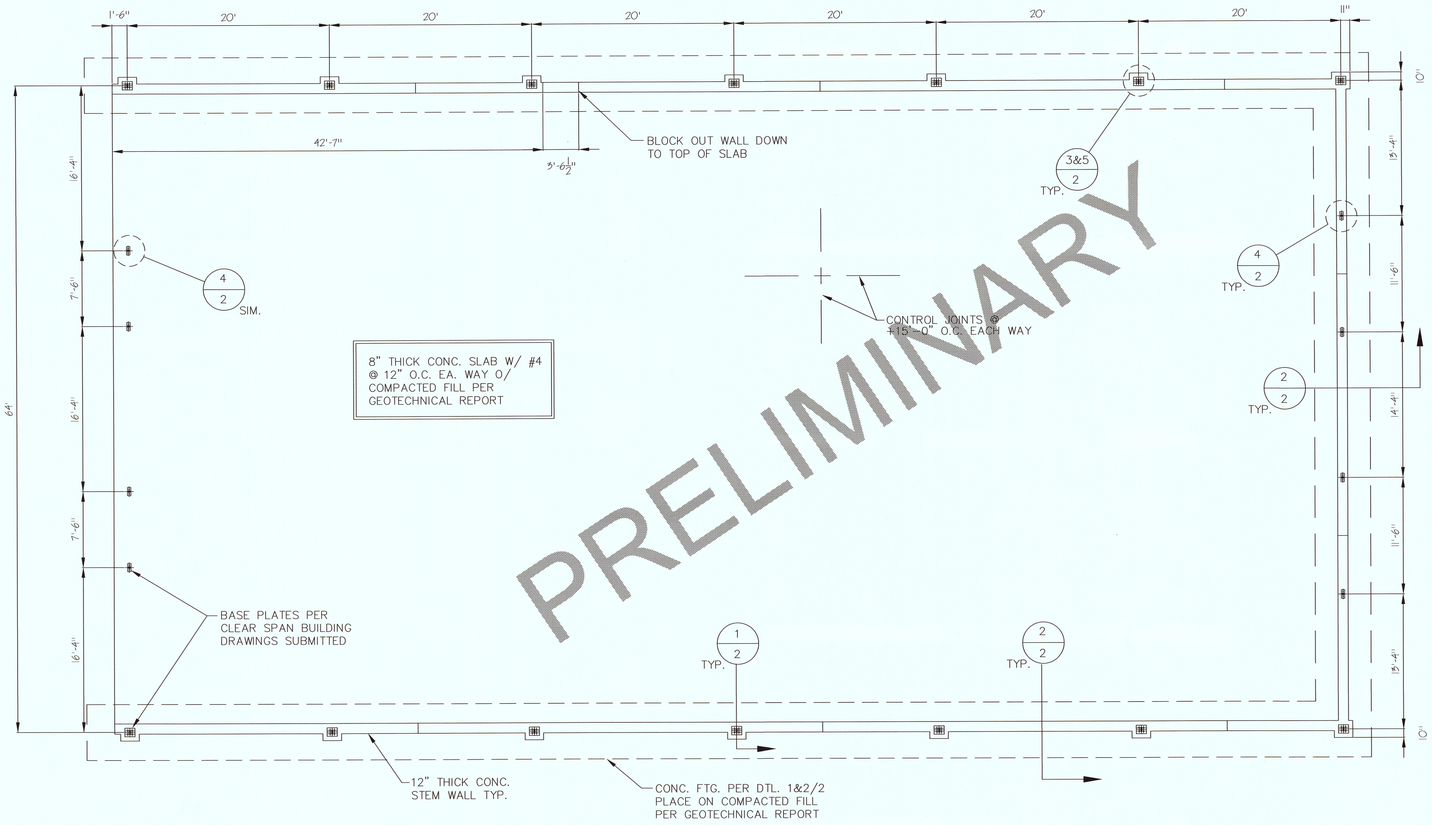

PRELIMINARY

FOUNDATION PLAN
SCALE: N.T.S.

FOUNDATION NOTES:

1. CONTRACTOR SHALL VERIFY ALL DIMENSIONS AND TOP OF FOUNDATION ELEVATIONS WITH STEEL BUILDING DRAWINGS PRIOR TO CONSTRUCTION.
2. SEE STEEL BUILDING DRAWINGS FOR ALL INFORMATION PERTAINING TO STEEL BUILDING.
3. PROVIDE FOUNDATION WALL CONTROL JOINTS (C.J.) AT THE APPROXIMATE LOCATIONS SPECIFIED PER PLAN (± 40' O.C.) SEE DETAIL 4/S2 FOR CONTROL SPECIFICATIONS

PREPARED BY
ENGINEERING DEPARTMENT
CITY OF CONCORD
P.O. BOX 308
CONCORD N.C. 28026
(704) 920-5425

Engineer's Seal

Surveyor's Seal

SALT STORAGE BUILDING
SITE PLAN
FOUNDATION PLAN
PROJECT #: 2015-023

REV #	DATE	DESCRIPTION	BY

DESIGNED BY: EAB
DRAWN BY: EES
CHECKED BY: EAB
SCALE: AS SHOWN
DATE: 10/05/15
PROJECT NUMBER: 2015-023
SHEET: 1 OF: 2

© Engr/Engineering Projects/Projects/2015/023 Salt Building/Revised/Foundation Plan.dwg Oct 12, 2015 - 1:22pm

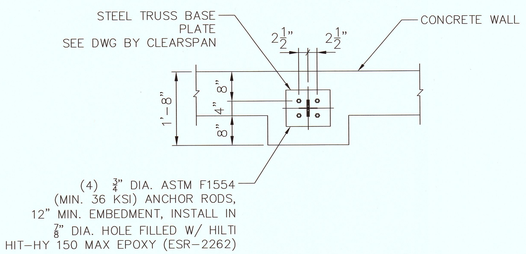

SIDE WALL THRUSS PLATE ANCHORAGE (3)
SCALE: N.T.S.

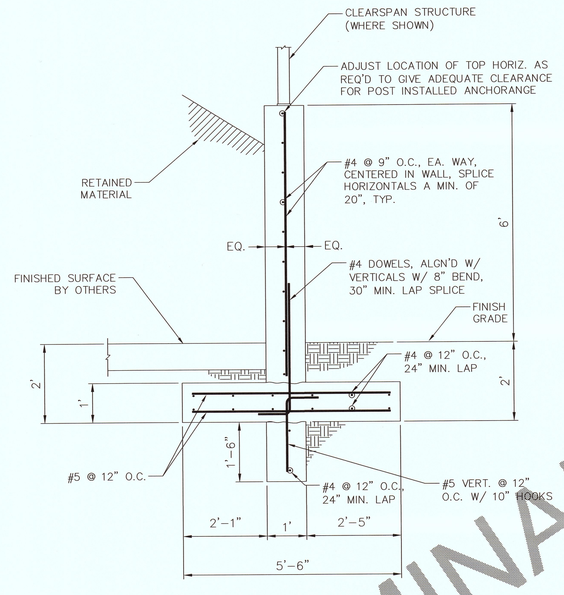

TYPICAL FOUNDATION AT END WALL AND BETWEEN PIERS (SIDEWALL) (2)
SCALE: N.T.S.

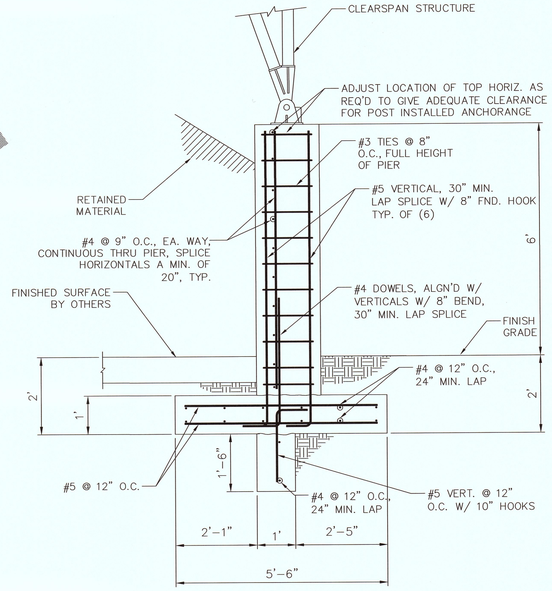

TYPICAL FOUNDATION AT SIDE WALL (1)
SCALE: N.T.S.

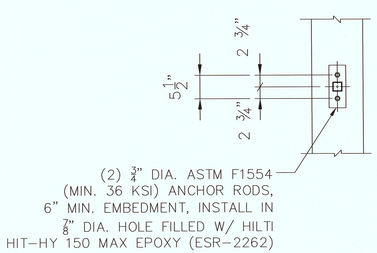

END WALL COL. PLATE ANCHORAGE (4)
SCALE: N.T.S.

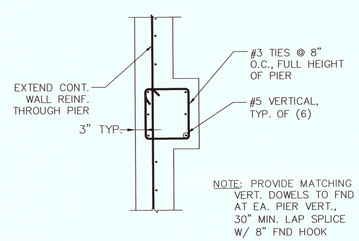

PIER REINFORCEMENT (5)
SCALE: N.T.S.

PRELIMINARY

Concord NORTH CAROLINA High Performance Living

PREPARED BY
ENGINEERING DEPARTMENT
CITY OF CONCORD
P.O. BOX 308
CONCORD N.C. 28026
(704) 920-5425

Engineer's Seal

Surveyor's Seal

SALT STORAGE BUILDING
SITE PLAN
DETAILS
PROJECT # : 2015-023

REV. #	DATE	DESCRIPTION	BY

DESIGNED BY: EAB
DRAWN BY: EES
CHECKED BY: EAB
SCALE: AS SHOWN
DATE: 10/05/15
PROJECT NUMBER: 2015-023
SHEET: 2 OF: 2